ME-1814

FORM UE070021

PARTS BOOK

CATERPILLAR
D379 ENGINE

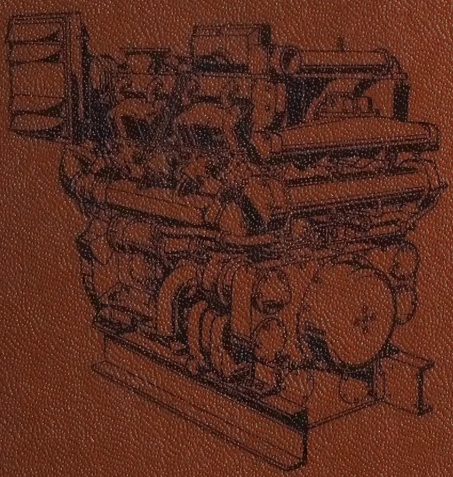

SERIAL NUMBERS
68B675 TO **68B1615**
76B1 TO **76B415**
INCLUSIVE

QUICK REFERENCE CHARTS

USE THESE CHARTS TO RECORD FREQUENTLY USED MAINTENANCE INFORMATION

MACHINE SERIAL NO.	
EQUIPMENT NO.	

FREQUENTLY REPLACED ITEMS

PART NO.	PART NAME

FLUIDS & LUBRICANTS

WHERE USED	TYPE	AMOUNT

OTHER MAINTENANCE ITEMS

D379 ENGINE

HOW TO ORDER PARTS

Please be sure to furnish the quantity, part number and name of each part wanted. It is also important to give the serial number of the machine for which the parts are intended. Location of serial number plates may be determined by referring to the "Specifications" page of this parts book. It is suggested that you write the serial number of your machine in this space so that it will be readily available when you need it.

THIS PARTS BOOK FOR
MACHINE SERIAL NUMBER

.....

To insure prompt delivery, please don't overlook furnishing the correct name of the consignee, also the street address, town, county and state to which the parts are to be shipped, and indicate whether shipment is to be made by freight, express, parcel post or by other means.

WHERE TO ORDER PARTS

Caterpillar dealers maintain over 400 stores in the United States, and similar establishments are located strategically in nearly all countries throughout the world. These organizations are backed by the extensive facilities and resources of Caterpillar Tractor Co.

Dealer personnel are factory trained in the stocking and issuing of parts, and large stocks are constantly maintained to insure prompt service. Contact your nearest Caterpillar dealer to make sure that he has your name and address, the correct serial number of your machine, and an accurate list of accessories and attachments. This record will facilitate the issuance of parts when you need them in a hurry.

WHAT THE CATERPILLAR DEALER CAN DO FOR YOU

Caterpillar dealers are in the business of making it economical and profitable for you to own and operate Caterpillar machinery. They are in constant touch with the factory for new developments in repair and maintenance methods, operating procedures, and parts requirements. Their parts stocks are active and up-to-date, including all parts normally required to protect your investment in Caterpillar machinery.

Nearly all Caterpillar dealers offer 24-hour emergency service. For quick reference, write the name and address of the local dealer on your desk pad or the front of your phone book.

ONLY CATERPILLAR PARTS GIVE CATERPILLAR PERFORMANCE

The same quality and craftsmanship that has made Caterpillar products famous throughout the world is built into all Caterpillar replacement parts.

REVISION PUBLISHED NOVEMBER 1975

COMPILED BY SHIRLEY WARD

THIS PARTS BOOK INCLUDES THE SERVICED PARTS OF D379 ENGINE, 68B675—UP AND 76B1—UP, MANUFACTURED TO THE FOLLOWING ENGINE ARRANGEMENTS

S.A.E. STANDARD ENGINE ROTATION

4L1129 TURBOCHARGED ENGINE ARRANGEMENT
6L4985 TURBOCHARGED ENGINE ARRANGEMENT

S.A.E. OPPOSITE STANDARD ENGINE ROTATION

5L2736 TURBOCHARGED ENGINE ARRANGEMENT
5L7143 TURBOCHARGED ENGINE ARRANGEMENT

BEFORE SELECTING REQUIRED PARTS, BE SURE TO READ THE CAPTIONS BENEATH THE ILLUSTRATION

INDEX

Name	Page
Aftercooler	31
Air Cleaner	20
Balancer	51
Base—Oil Pan	82
Breather	54
Camshaft	54
Connecting Rod	53
Control—Governor	57
Crankshaft	50
Crankshaft Bearings	50
Cylinder Block and Covers	48
Crankshaft Conversion Seal	50B
Cylinder Head	44
Drive—Front Accessory	38
Drive—Fuel Pump & Governor	60
Filter—Fuel	74
Filter—Oil	79
Flywheel	52
Fuel Injection System	75
Fuel Lines—Flexible	71
Gasket Kits	51
Governor	58
Lifting Eye	37
Manifolds	32
Oil Cooler and Lines	80
Piston	53
Pump—Fuel Priming	71
Pump—Fuel Transfer	73
Pump—Oil	78
Pump—Water	16
Service Meter	55
Shut-Off—Safety Control	68
Specifications	200
Transfers	199
Turbocharger	21
Valve—Turbocharger Lubrication	29
Valve Mechanism	44
Water Lines	18

Attachments

(Page 85)

Aftercooler—Sea Water 147	Chart—Governor Control 162
Air Cleaner 149	Chart—Heat Exchanger 145
Air Start Changeover 132A-1	Clutch—Enclosed 178
Alternator 120	Connections—Aftercooler 148
Battery 123	

Attachments—Continued

Name	Page
Contactor—Overspeed	116A
Contactor—Safety Alarm	116
Control—Governor—Hydraulic	166
Control—Governor—Positive Locking	165
Control—Governor—Remote	165
Conversion—Governor	170
Cooler—Torque Converter	172
Coupling—Flexible	182
Diaphragm Replacement—Air Cleaner	151
Drive—Auxiliary	138
Drive—Fan	139
Drive—Front Accessory	160
Drive—Tachometer	154
Ether Starting Aid	150B
Exhaust Fitting	151
Exhaust Flange	152
Exhaust Pipe	153
Fan	137
Flywheel Coupling Guard	183B
Generator	119
Glow Plug	115
Governor Spring Conversion	171B
Governor—Woodward	167
Heat Exchanger	146
Indicator—Air Filter	148
Installation—Generator	184
Instrument—Panel	156
Instruments—Electrical	155
Junction Box—Starting System	116
Mounting—Radiator	137
Precleaner	150
Pump—Fresh Water	140A
Pump—Sea Water	143
Radiator	135
Rails—Engine Support	182
Receiver—Air	124
Relief Valve	178A
Shaft—Rack Limit Servo	159
Shaft—Stub	181
Shut-Off—Manual	159
Shut-Off—Safety	157B
Shut-Off—Water Temperature	158
Start-Stop—Automatic	134A
Starting—Air	125
Starting—Electric—12 Volt	105
Starting—Electric—32 Volt	106
Starting—Gasoline	85
Starting—Hydraulic	117
Support—Fuel Line	168
Tachometer Electric	153
Tank—Expansion	142
Tank—Surge	140
Tools	198
Torque Springs	168
Turbocharger	173
Water Lines	140
Water Lines—Sea	145

Generators

(Page 185)

Generator 186

ASSUREZ-VOUS EN CONSULTANT CE CATALOGUE QUE VOUS UTILISEZ BIEN LES ILLUSTRATIONS CORRESPONDANT AU MODÈLE ET NUMÉRO DE VOTRE MOTEUR.

INDEX ALPHABÉTIQUE

Désignation	Page
Accessoires (entraînement avant)	38
Arbre à cames	54
Arrêt automatique de sécurité	68
Bielles	53
Bloc-cylindres	48
Canalisations souples de carburant	71
Caractéristiques	200
Carter inférieur (socle)	82
Collecteurs	32
Compteur d'entretien	55
Coussinets de vilebrequin	50
Culasses	44
Entraînements secondaires (pompe d'injection et régulateur)	60
Equilibreur dynamique	51
Filtre à air	20
Filtre à carburant diesel	74
Filtre à huile de graissage	79
Groupe d'injection de carburant	75
Instructions sur décalcomanies	199
Jeux de joints	51
Piston	53
Pompe à eau	16
Pompe à huile de graissage	78
Pompe d'alimentation de carburant	73
Pompe d'amorçage (carburant)	71
Réfrigérant d'admission	31
Réfrigérant d'huile de graissage et canalisations	80
Régulateur	58
Régulateur (timonerie extérieure)	57
Reniflard	54
Soupape de lubrification du turbo-compresseur	29
Soupapes et train de commande	44
Turbo-compresseur	21
Tuyauterie d'eau	18
Vilebrequin	50
Vis à oeil (pour le levage du moteur)	37
Volant	52

Accessoires

(Page 85)

Accessoires (entraînement avant)	160
Accouplement flexible	182
Alternateur	120
Arbre de volant	181
Arrêt à commande manuelle	159
Arrêt automatique par échauffement	158
Batterie	123

Accessoires—Continué

Désignation	Page
Boîte de jonction (démarrage)	116
Bougies de départ	115
Bride d'échappement	152
Butée élastique de course de crémaillère	168
Canalisations de carburant (support)	168
Contacteur d'alarme (sécurité)	116
Convertisseur (réfrigérant)	172
Démarrage à air comprimé	125
Démarreur électrique 12 volts	105
Démarreur électrique 32 volts	106
Démarreur hydraulique	117
Diaphragme (filtre à air)	151
Dynamo	119
Dynamo (groupe de montage)	184
Echangeurs de température	145, 146
Echappement (tuyauterie de raccordement)	151
Embrayage sous carter	178
Entraînement auxiliaire	138
Filtre à air	149
Groupe de lancement à essence (gazoline)	85
Indicateur de colmatage (filtre à air)	148
Instruments électriques	155
Longerons de support moteur	182
Outillage	198
Pompe à eau brute	143
Préfiltre à air	150
Radiateur	135
Radiateur (groupe de montage)	137
Réfrigérant d'admission d'air (branchements)	148
Réfrigérant d'admission d'air (eau brute)	147
Régulateur (commande hydraulique)	166
Régulateur (groupe de transformation)	170
Régulateur (télécommande)	165
Régulateur (verrouillage anti-retour)	165
Régulateur (Woodward)	167
Réservoir d'air comprimé	124
Réservoir d'expansion	140
Servo-limiter de crémaillère	159
Tableau des combinaisons de régulateur	162
Tableau d'instruments (groupe de montage)	156
Tachymètre électrique	153
Tachymètre (entraînement)	154
Turbo-compresseur	173
Tuyau d'échappement	153
Tuyauterie d'eau	140
Tuyauterie d'eau brute	145
Ventilateur	137
Ventilateur (entraînement)	139

Génératrices

(Page 185)

Génératrices 186

ANTES DE ELEGIR LOS REPUESTOS NECESARIOS LEA LOS TITULOS DEBAJO DE LAS ILUSTRACIONES

INDICE

Nombre	Página
Amortiguador de Vibración	51
Arbol de Levas	54
Aro para Levantar	37
Base—Cárter	82
Bielas	53
Bloque del Motor y Tapas	48
Bomba de Cebado del Combustible	71
Bomba de Transferencia del Combustible	73
Bomba del Aceite	78
Bomba del Agua	16
Cajas con Empaquetaduras	51
Calcomanías	199
Cigüeñal	50
Cojinetes de Bancada	50
Control de Parada Automática	68
Control del Regulador	57
Culata	44
Enfriador del Aceite y Tuberías	80
Enfriador del Aire de Admisión	31

Nombre	Página
Especificaciones	200
Filtro de Aire	20
Filtro del Aceite	79
Filtro del Combustible	74
Mando de las Bombas del Combustible y Regulador	60
Mando Delantero de Accesorios	38
Mecanismo de las Válvulas	44
Medidor de Servicio	55
Múltiples	32
Pistón	53
Regulador	58
Respiradero	54
Sistema de Inyección del Combustible	75
Tuberías del Agua	18
Tuberías Flexibles del Combustible	71
Turboalimentador	21
Válvula de Lubricación del Turboalimentador	29
Volante	52

Accesorios

(Página 85)

Acoplamiento Flexible	182
Alternador	120
Antefiltro	150
Arranque—Gasolina	85
Arranque Eléctrico—12 Voltios	105
Arranque Eléctrico—32 Voltios	106

Accesorios—Continuación

Nombre	Página
Arranque Hidráulico	117
Arranque por Aire	125
Batería	123
Bomba del Agua Basta	143
Brida del Escape	152
Bujías Incandescentes	115
Capa de Empalme—Sistema de Arranque	116
Conexión del Escape	151
Conexiones—Enfriador del Aire de Admisión	148
Contactor—Alarma	116
Control—Regulador—Hidráulico	166
Control del Regulador de Cierre Positivo	165
Control Remoto del Regulador	165
Conversión—Regulador	170
Diafragma de Repuesto—Filtro de Aire	151
Eje del Servocontrol de la Cremallera	159
Embrague Cubierto	178
Enfriador—Convertidor de Torsión	172
Enfriador del Aire de Admisión—Agua Basta	147
Filtro de Aire	149
Generador	119
Herramientas	198
Indicador—Filtro de Aire	148
Instalación—Generador	184
Instrumentos Eléctricos	155
Intercambiador de Calor	146
Mando Auxiliar	138
Mando del Ventilador	139
Mando Delantero de Accesorios	160
Montaje—Instrumentos y Tablero	156
Montaje—Radiador	137
Muñón de Eje	181
Parada Automática—Temperatura del Agua	158
Parada Manual	159
Radiador	135
Regulador Woodward	167
Resortes de Torque	168
Rieles—Soporte del Motor	182
Soporte—Tuberías del Combustible	168
Tabla—Control del Regulador	162
Tabla—Intercambiador de Calor	145
Tacómetro Eléctrico	153
Tanque de Aire	124
Tanque de Compensación	140
Toma para Tacómetro	154
Tuberías del Agua	140
Tuberías del Agua Basta	145
Tubo de Escape	153
Turboalimentador	173
Ventilador	137

Generadores

(Página 185)

Generador	186

AO ESCOLHER AS PEÇAS NECESSÁRIAS VEJA, SOB A ILUSTRAÇÃO, SE ELAS PERTENCEM AO ARRANJO CORRETO DO MOTOR

ÍNDICE

Nomenclatura	Página
Arrefecedor da admissão	31
Arrefecedor de óleo e tubulações	80
Árvore de comando das válvulas	54
Árvore de manivelas (virabrequim)	50
Base do cárter	82
Biela	53
Bloco do motor e tampas	48
Bamba d'água	16
Bomba de óleo	78
Bomba de purgação do combustível	71
Bomba de transferência do combustível	73
Cabeçote	44
Coletores	32
Comando das bombas injetoras e do regulador de velocidade	60
Comando dianteiro de acessórios	38
Contrabalanço	51
Contrôle do regulador de velocidade (acelerador)	57
Decalcomanias	199
Especificações	200
Filtro de óleo	79
Filtro do combustível	74
Jogos de juntas	51
Mancais principais da árvore de manivelas	50
Marcador de horas de serviço	55
Mecanismo das válvulas	44
Olhal de levantamento	37
Parada automática de segurança	68
Pistão	53
Purificador de ar	20
Regulador de velocidade	58
Respiro	54
Sistema de injeção do combustível	75
Tubos d'água	18
Tubulações flexíveis do combustível	71
Turbocompressor	21
Válvula de lubrificação do turbocompressor	29
Volante do motor	52

Acessórios

(Página 85)

Nomenclatura	Página
Acoplamento flexível	182
Arrefecedor da admissão a água natural	147
Arrefecedor do conversor de torque	172
Árvore curta para a tomada de fôrça	181

Acessórios—Continuação

Nomenclatura	Página
Bateria	123
Bomba d'água natural	143
Caixa de junção do sistema de partida	116
Comando auxiliar	138
Comando dianteiro de acessórios	160
Comando do tacômetro	154
Comando do ventilador	139
Conexão do escapamento	151
Conexões do arrefecedor da admissão	148
Contactor do alarme de segurança	116
Contrôle de trava positiva do regulador	165
Contrôle hidráulico do regulador	166
Contrôle remoto do regulador	165
Conversão do regulador de velocidade	170
Diafragma do purificador	151
Dínamo	119
Dispositivo de parada automática por temperatura d'água	158
Dispositivo de parada manual	159
Embreagem coberta	178
Ferramentas	198
Flange do escapamento	152
Gerador alternador	120
Gerador—Instalação	184
Indicador de limpeza do purificador	148
Instrumentos elétricos	155
Limitador servo-hidràulico da cremalheira	159
Mola de contrôle do torque	168
Painel de instrumentos—Montagem	156
Partida a ar	125
Partida a gasolina	85
Partida elétrica—12 volts	105
Partida elétrica—32 volts	106
Partida hidráulica	117
Permutador de calor	146
Pré-purificador	150
Purificador de ar	149
Radiador	135
Radiador—Montagem	137
Regulador de velocidade Woodward	167
Relação de peças de contrôle do regulador	162
Relação dos permutadores de calor e suas aplicações	145
Suporte do tubo de combustível	168
Tacômetro elétrico	153
Tanque de ar	124
Tanque de expansão	140
Trilhos de suporte do motor	182
Tubo de escapamento	153
Tubos d'água	140
Tubos d'água natural	145
Turbocompressor	173
Vela de aquecimento	115
Ventilador	137

Geradores

(Página 185)

Gerador 186

TEILE, BZW. DEREN NUMMERN, SOLLTEN NUR ANHAND DER, FÜR IHREN BESTIMMTEN MOTORTYP ZUTREFFENDEN DARSTELLUNGEN AUSGEWAHLT WERDEN

INHALTSVERZEICHNIS

Bezeichnung	Seite
Abziehbilder	199
Auswuchter	51
Dichtungssätze	51
Einspritzpumpe und Reglerantrieb	60
Einspritzsystem	75
Entlüfter	54
Handkraftstoffpumpe	71
Huböse	37
Kolben	53
Kraftstoffilter	74
Kraftstofförderpumpe	73
Kraftstoffleitungen, elastisch	71
Krümmer	32
Kurbellager	50
Kurbelwelle	50
Ladeluftkühler	31
Luftreiniger	20
Motorblock und Deckel	48
Nockenwelle	54
Ölkühler und Leitungen	80
Ölwannenunterbau	82
Pleuel	53
Regler	58
Reglergestänge	57
Schmierfilter	79
Schmierpumpe	78
Schwungscheibe	52
Sicherheitsabstellvorrichtung	68
Steuerantrieb, vorne	38
Technische Daten	200
Turbolader	21
Turboladerschmierventil	29
Ventilsteuerung	44
Wartungsmesser	55
Wasserleitungen	18
Wasserpumpe	16
Zylinderkopf	44

Zubehör

(Seite 85)

Abstellvorrichtung, wassertemperaturabhängig	158
Abzweigdose der Startanlage	116
Alarmkontaktvorrichtung	116
Armaturen, elektrisch	155
Auspuffanschluss	151

Zubehör—Fortgesetzt

Bezeichnung	Seite
Auspufflansch	152
Auspuffrohr	153
Batterie	123
Benzinstartermotor	85
Drehmomentfedern	168
Drehmomentwandlerkühler	172
Drehstromlichtmaschine	120
Drehzahlmesser, elektrisch	153
Drehzahlmesserantrieb	154
Druckluftstartanlage	125
Elastische Kupplung	182
Elektrischer Anlasser, 12 Volt	105
Elektrischer Anlasser, 32 Volt	106
Gashebel, verriegelbar	165
Generator	119
Generatoreinbau	184
Glühkerze	115
Handabstellung	159
Hydraulikregler	166
Hydraulische Startanlage	117
Instrumentenbretthalterung	156
Kraftstoffleitungshalter	168
Kühlernetz	135
Kühlernetzaufhängung	137
Kupplung, geschlossen	178
Ladeluftkühleranschlüsse	148
Lufteinlass	124
Luftfilteranzeige	148
Luftreiniger	149
Luftreiniger-Ersatzmembrane	151
Motorunterbau	182
Nebenantrieb	138
Reglereinstelltabelle	162
Reglerfernsteuerung	165
Reglerumbaugruppe	170
Rohwasser-Ladeluftkühler	147
Rohwasserleitungen	145
Rohwasserpumpe	143
Steuerantrieb, vorne	160
Stummelwelle	181
Turbolader	173
Ventilator	137
Ventilatorantrieb	139
Vorreiniger	150
Wärmeaustauscher	146
Wärmeaustauschertabelle	145
Wasserleitungen	140
Werkzeuge	198
Windkessel	140
Woodward-Regler	167
Zahnstangenbegrenzer-Servowelle	159

Generatoren

(Seite 185)

Generator 186

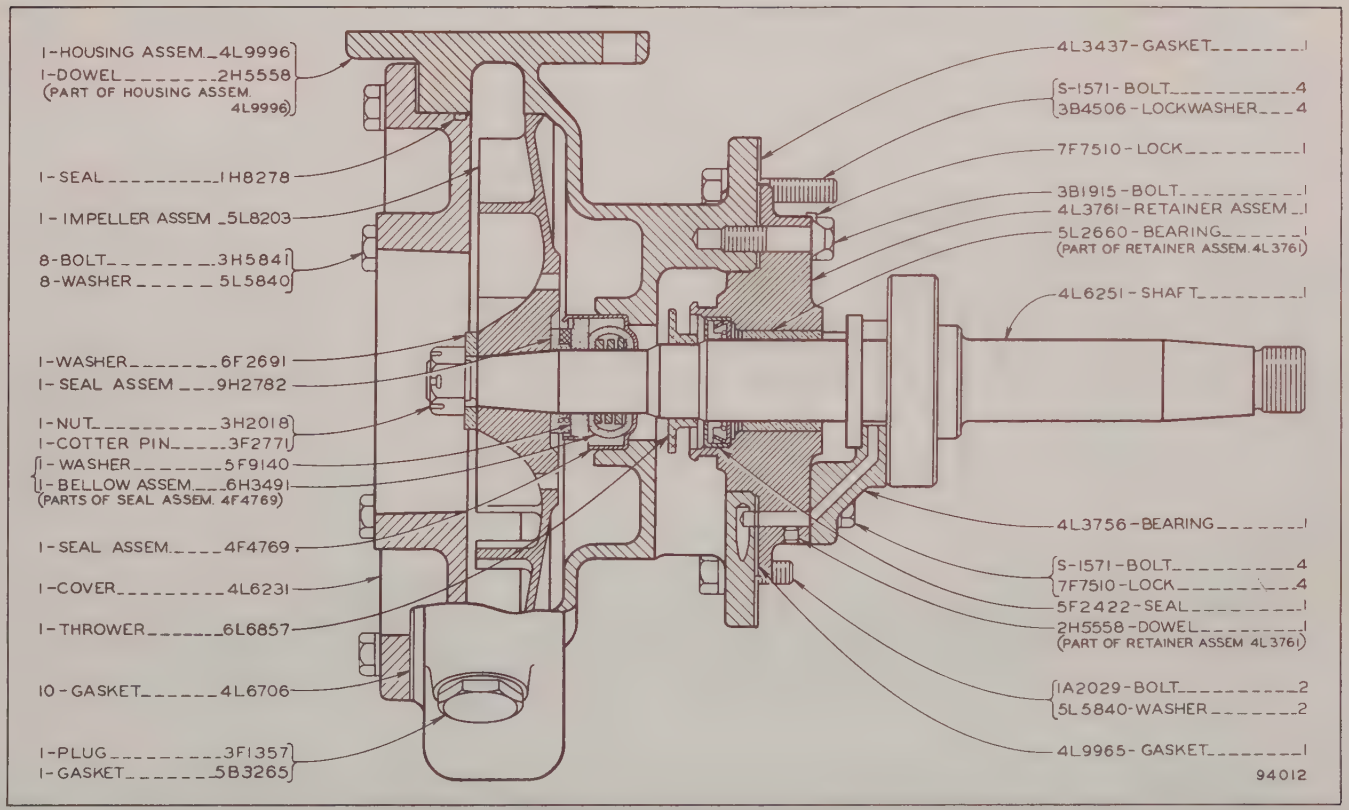

4L8800 WATER PUMP GROUP

Serial No. 68B675 to 68B786 inclusive and 76B1 to 76B92 inclusive

See Page 51 for Gasket Kits. Refer also to Pages 139, 143 and 144 for special parts

4L8800 WATER PUMP GROUP

SERIAL NO. 68B787 TO 68B1033 INCLUSIVE AND 76B93 TO 76B128 INCLUSIVE

SEE PAGE 51 FOR GASKET KIT. REFER ALSO TO PAGES 143 & 144 FOR SPECIAL PARTS

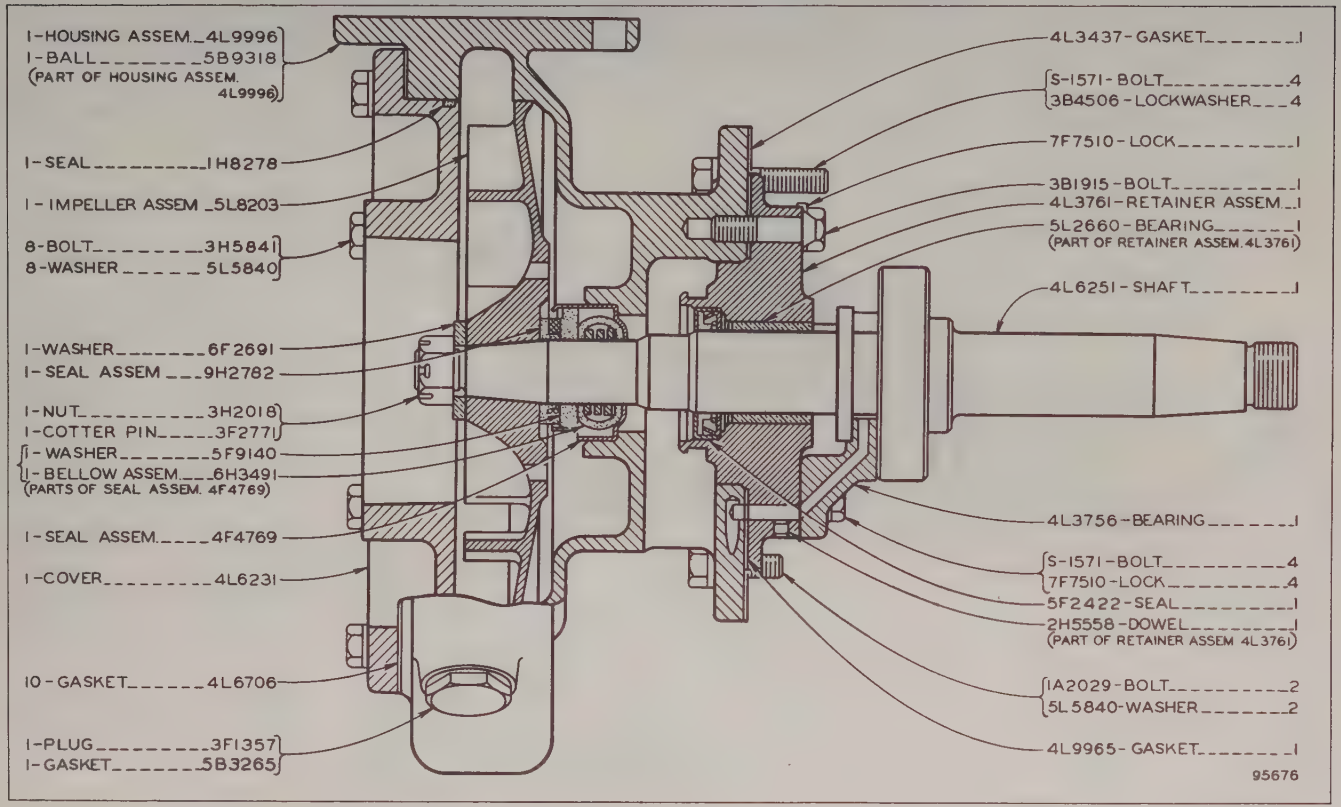

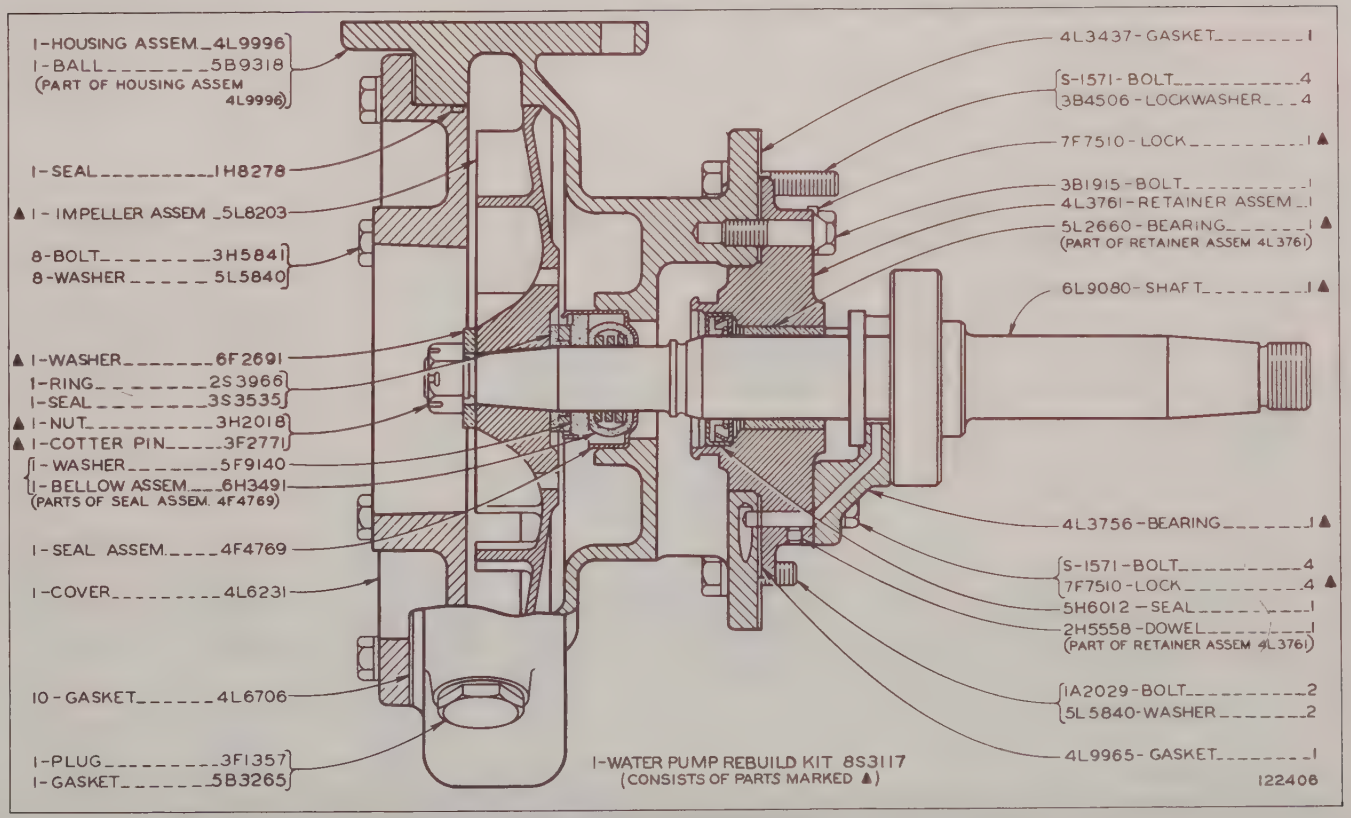

4L8800 WATER PUMP GROUP

SERIAL NO. 68B1034 TO 68B1204 INCLUSIVE AND 76B129 TO 76B204 INCLUSIVE

SEE PAGE 51 FOR GASKET KIT. REFER ALSO TO PAGES 143 AND 144 FOR SPECIAL PARTS

4L8800 WATER PUMP GROUP

Serial No. 68B1205—Up and 76B205—Up

See Page 51 for Gasket Kit. Refer also to Pages 143 and 144 for special parts

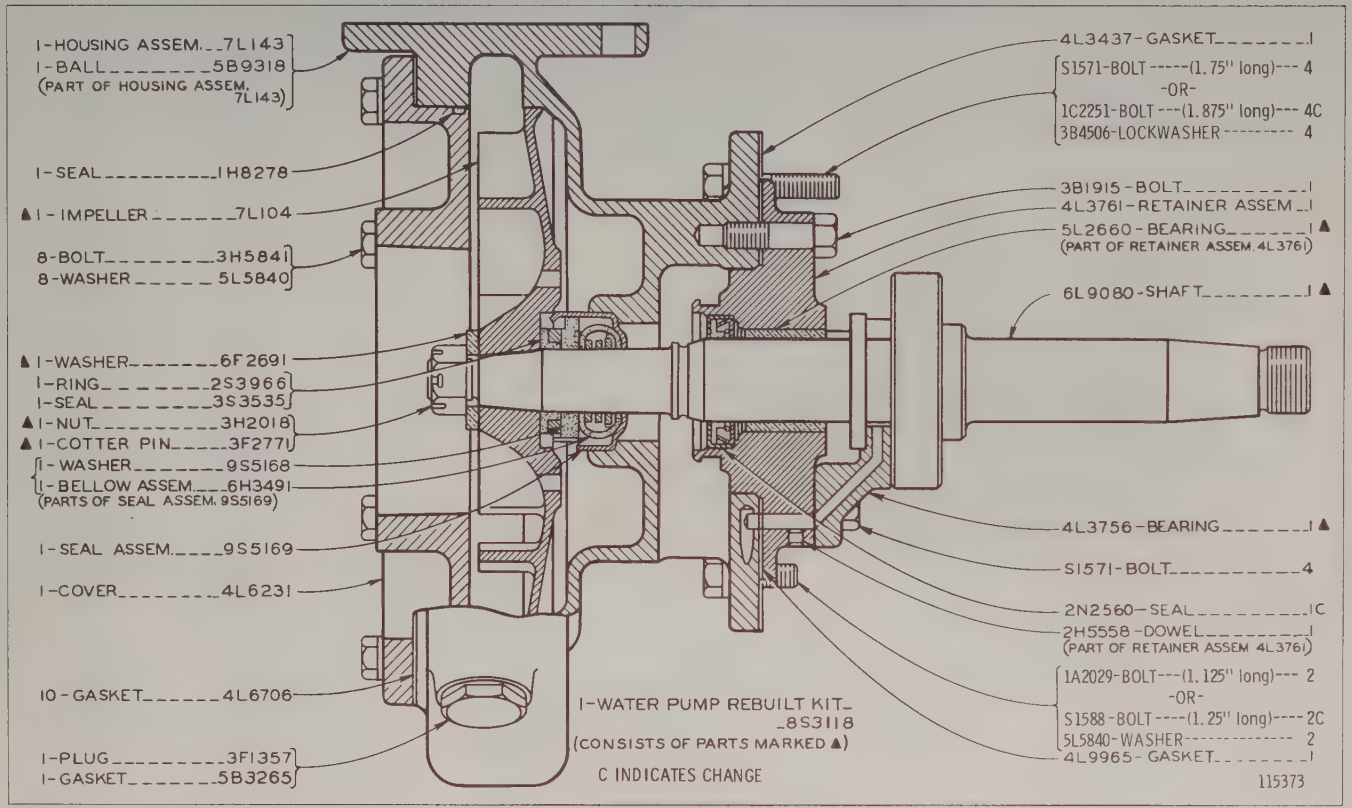

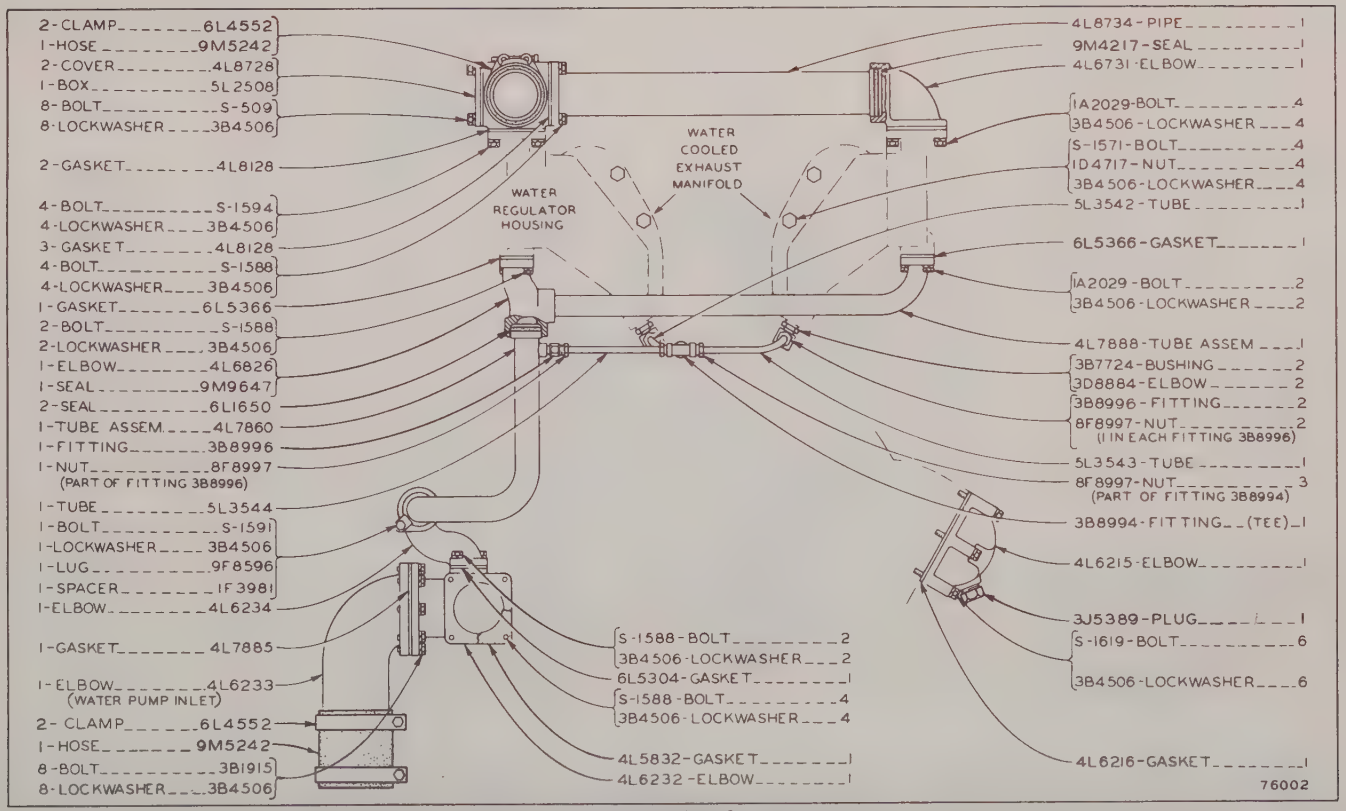

WATER LINES

Effective with Serial No. 68B675

PART OF 4L1129 S.A.E. STANDARD, 5L2736 AND 5L7143 S.A.E. OPPOSITE STANDARD ROTATION TURBOCHARGED ENGINE ARRANGEMENTS

Refer also to Pages 115, 116, 135, 140, 141, 142, 145, 146 and 158 for special parts

WATER LINES

Effective with Serial No. 76B1

PART OF 6L4985 S.A.E. STANDARD AND 5L7143 S.A.E. OPPOSITE STANDARD ROTATION TURBOCHARGED ENGINE ARRANGEMENTS

Refer also to Pages 115, 116, 135, 140, 141, 142, 145, 146 and 158 for special parts

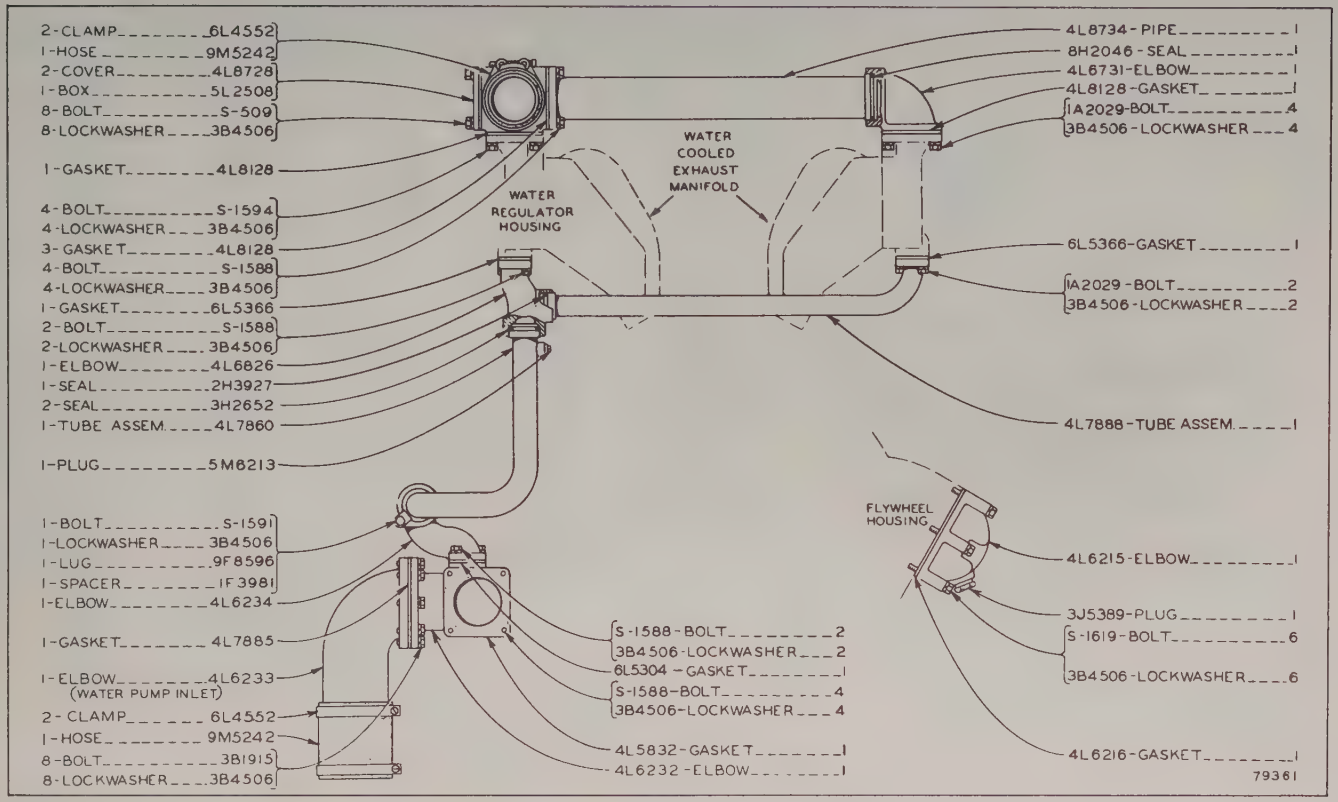

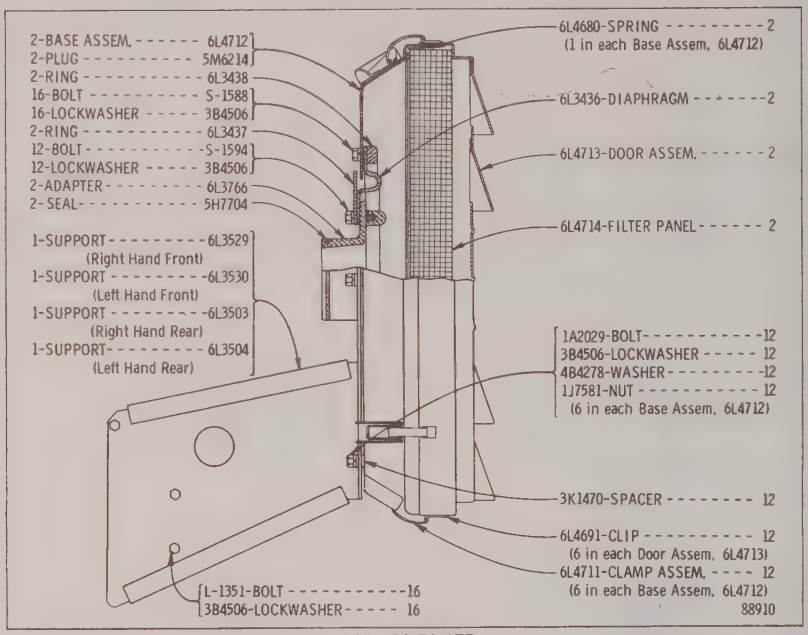

AIR CLEANER

SERIAL NO. 68B675 TO 68B797 INCLUSIVE & 76B1 TO 76B92 INCLUSIVE
REFER ALSO TO PAGES 148 THROUGH 151 FOR SPECIAL PARTS

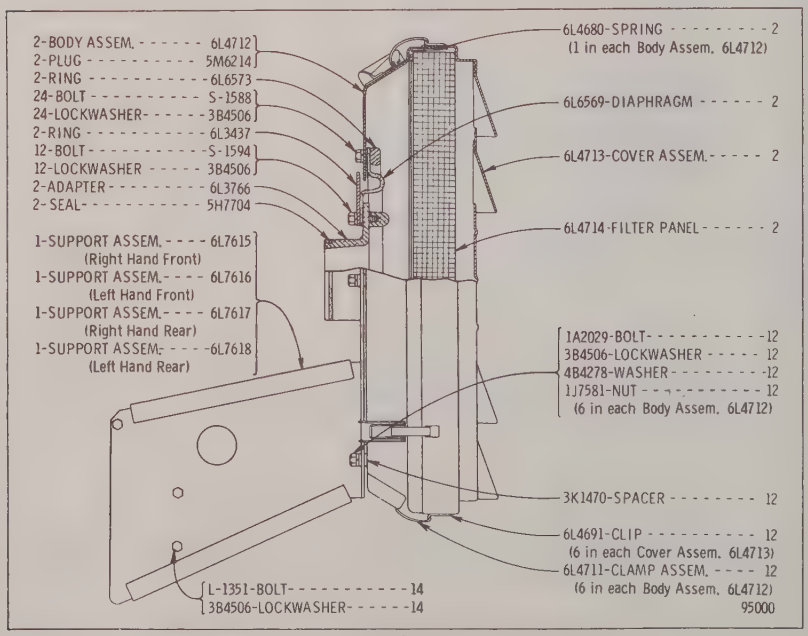

AIR CLEANER

SERIAL NO. 68B798 TO 68B1063 INCLUSIVE AND 76B93 TO 76B144 INCLUSIVE. REFER ALSO TO PAGES 148 THROUGH 151 FOR SPECIAL PARTS

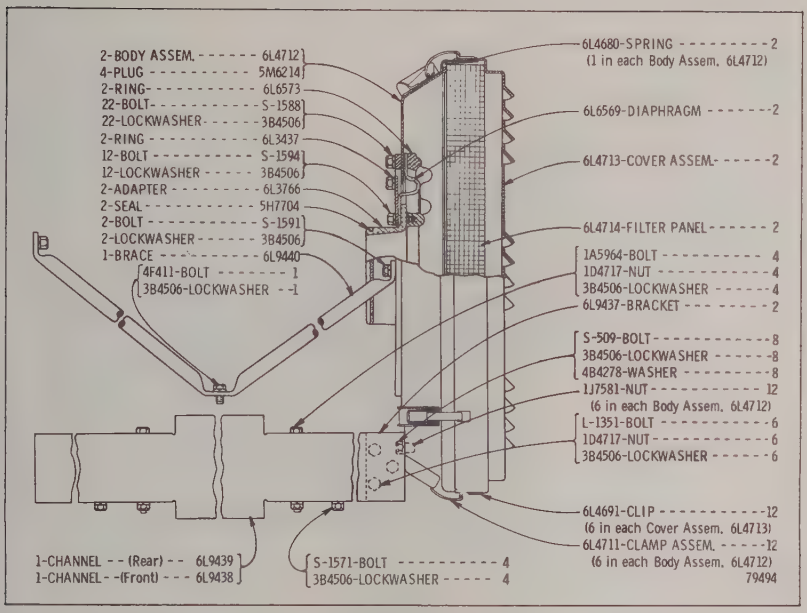

AIR CLEANER

SERIAL NO. 68B1064 TO 68B1126 AND 68B1130 INCLUSIVE AND 76B145 TO 76B160 AND 76B162 TO 76B166 INCLUSIVE

REFER ALSO TO PAGES 148 THROUGH 151 FOR SPECIAL PARTS

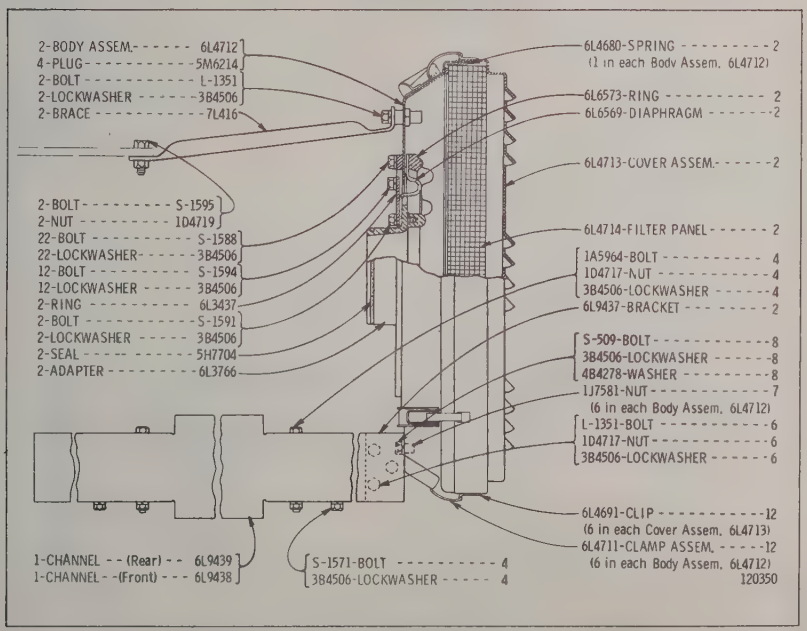

AIR CLEANER

SERIAL NO. 68B1127 TO 68B1129 AND 68B1131 TO 68B1211 INCLUSIVE AND 76B161 AND 76B167 TO 76B206 INCLUSIVE

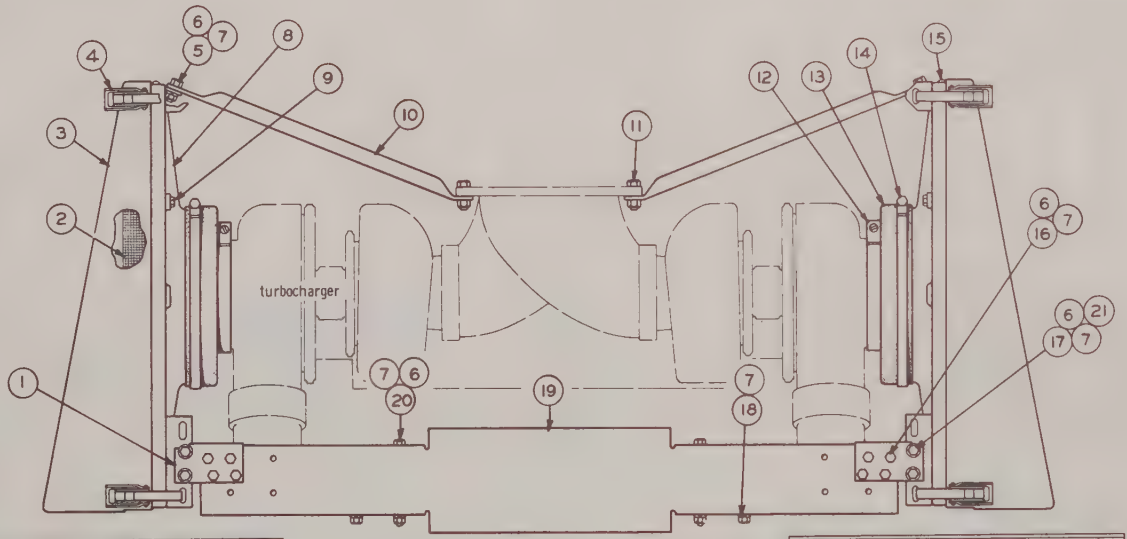

REF NO.	PART NUMBER	DESCRIPTION	QTY
1	7L6422	SUPPORT	4
2	6L4714	FILTER PANEL	2
3	7L6431	COVER ASSEM.	2
4	6L4711	CLAMP ASSEM. (Part of 7L6431 Cover Assem.)	8
5	L 1351	BOLT	2
6	1D4717	NUT	30
7	3B4506	LOCKWASHER	34
8	7L6428	HOUSING ASSEM.	2

REF NO.	PART NUMBER	DESCRIPTION	QTY
9	5M6214	PLUG	4
10	7L895	BRACE	2
11	S 1595	BOLT	2
	1D4719	NUT	2
12	8H5816	CLAMP	2
13	7L7728	HOSE	2

REF NO.	PART NUMBER	DESCRIPTION	QTY
14	4J8536	CLAMP	2
15	7L6479	PLUG (Button)	16
16	S-509	BOLT	16
17	T 55	BOLT	8
	7L6463	SPACER	8
18	S 1571	BOLT	4
19	6L9438	CHANNEL	2
20	1A5964	BOLT	4
21	4B4278	WASHER	4

105228

AIR CLEANER

Effective with Serial No. 68B1212-Up and 76B207-Up

Refer also to Pages 148 through 151 for special parts

TURBOCHARGERS—Rear View

Serial No. 68B675 to 68B710 and 68B713 to 68B716 inclusive

PART OF 4L1129 S.A.E. STANDARD, 5L2736 AND 5L7143 S.A.E. OPPOSITE STANDARD ROTATION TURBOCHARGED ENGINE ARRANGEMENTS

8M1780 and 1S520 Turbocharger Assembly parts are shown on Pages 26 and 27. Refer also to Pages 173 through 177 for special parts

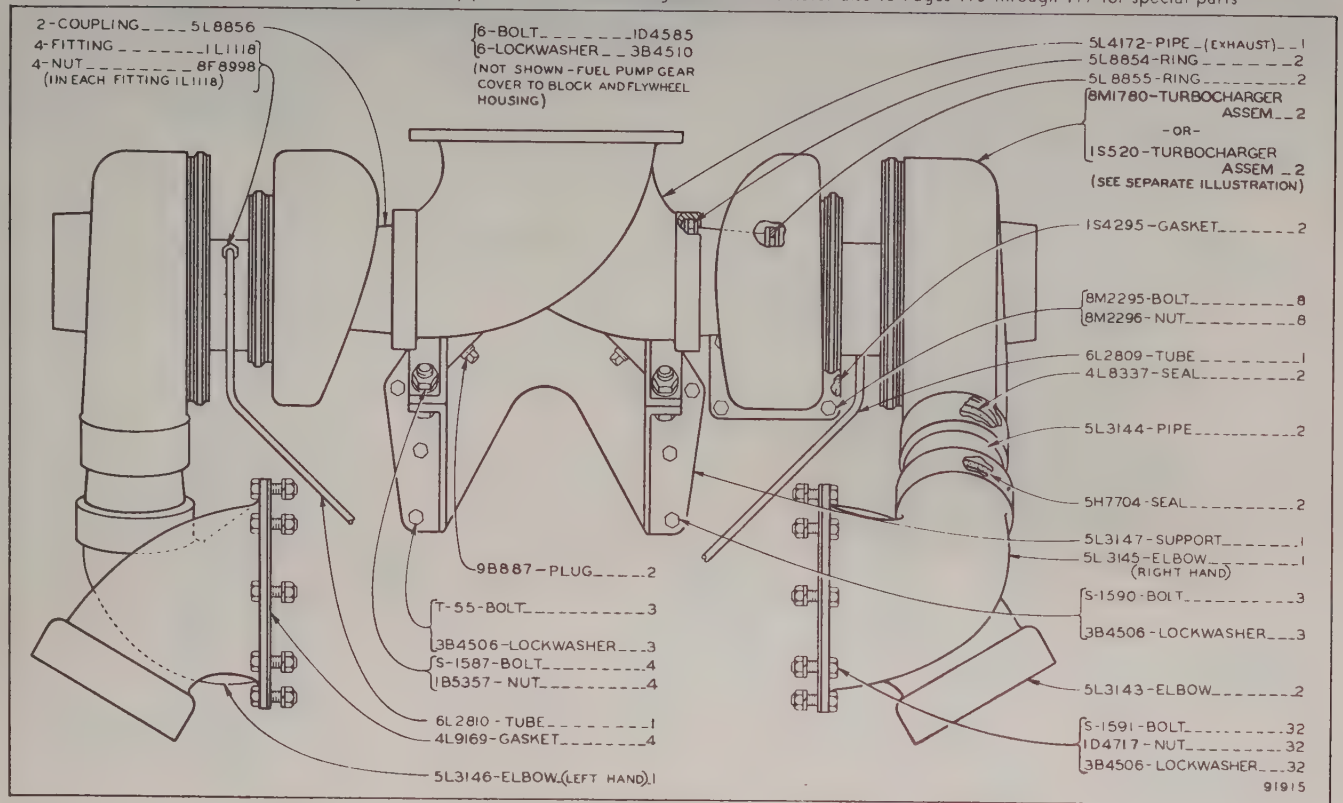

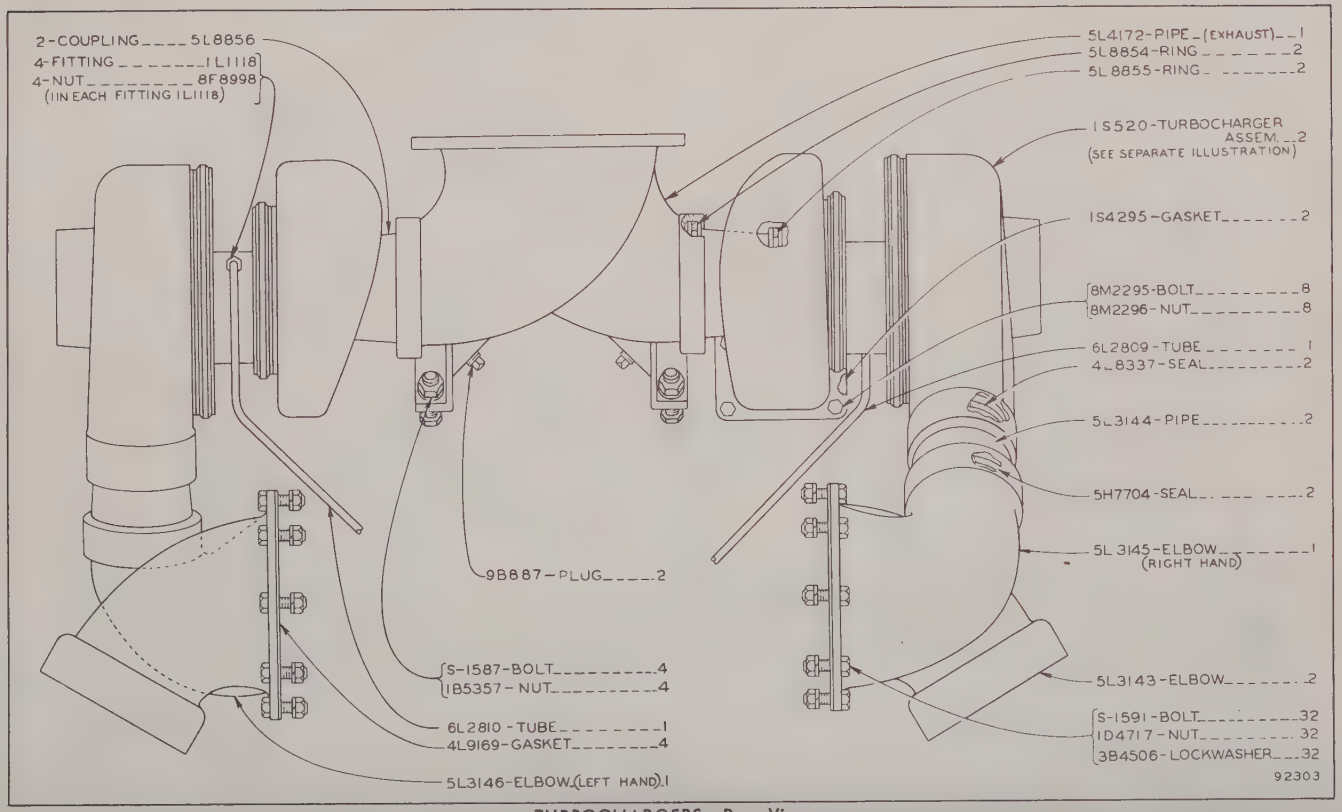

TURBOCHARGERS—Rear View

Serial No. 68B711, 68B712 and 68B717 to 68B791 inclusive

PART OF 4L1129 S.A.E. STANDARD, 5L2736 AND 5L7143 S.A.E. OPPOSITE STANDARD ROTATION TURBOCHARGED ENGINE ARRANGEMENTS

1S520 Turbocharger Assembly parts are shown on Page 27. Refer also to Pages 173 through 177 for special parts

TURBOCHARGERS--REAR VIEW

SERIAL NO. 68B792 TO 68B920 & 68B961 INCLUSIVE. PART OF 4L1129, 5L2736 AND 5L7143 ARRANGEMENTS LISTED ON PAGE 5. 8M1780 TURBOCHARGER PARTS ARE ON PAGE 26. REFER ALSO TO PAGES 173 THRU 177 FOR SPECIAL PARTS

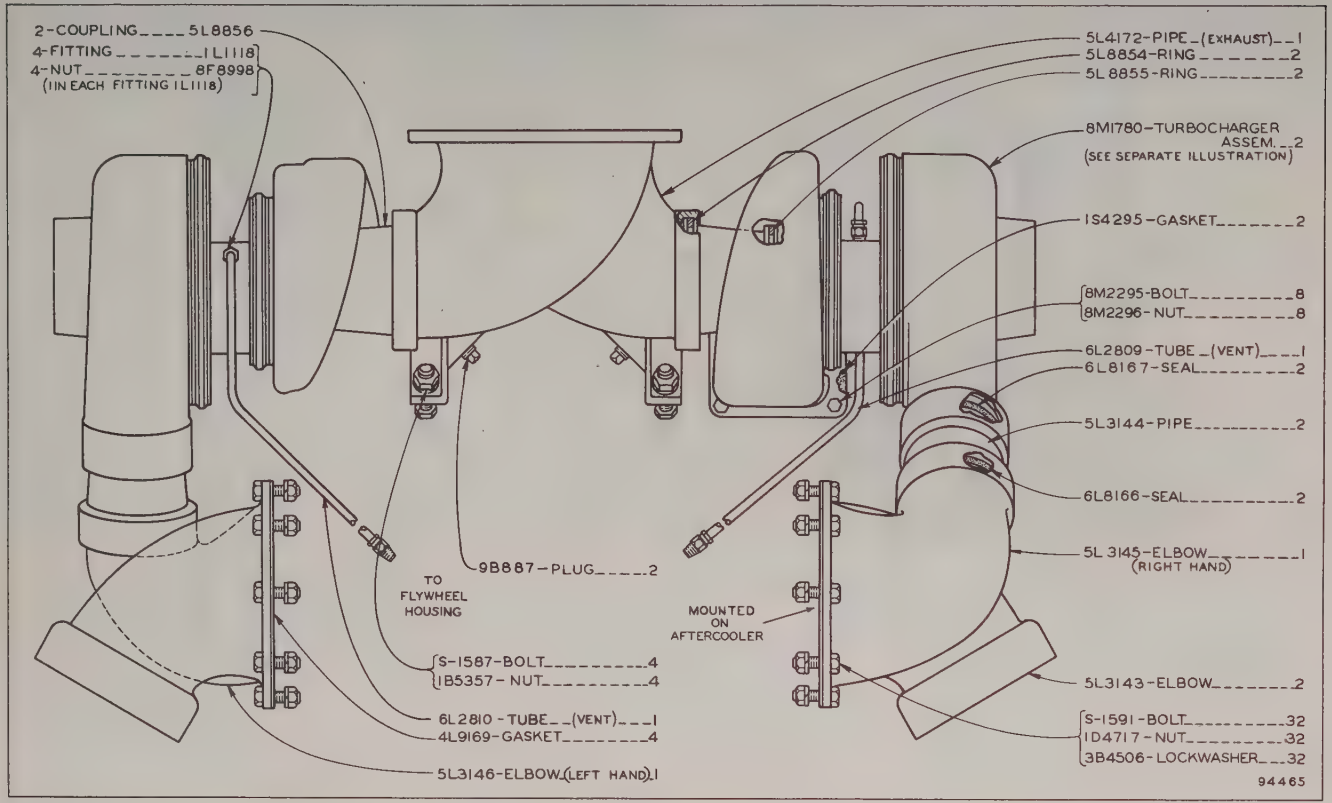

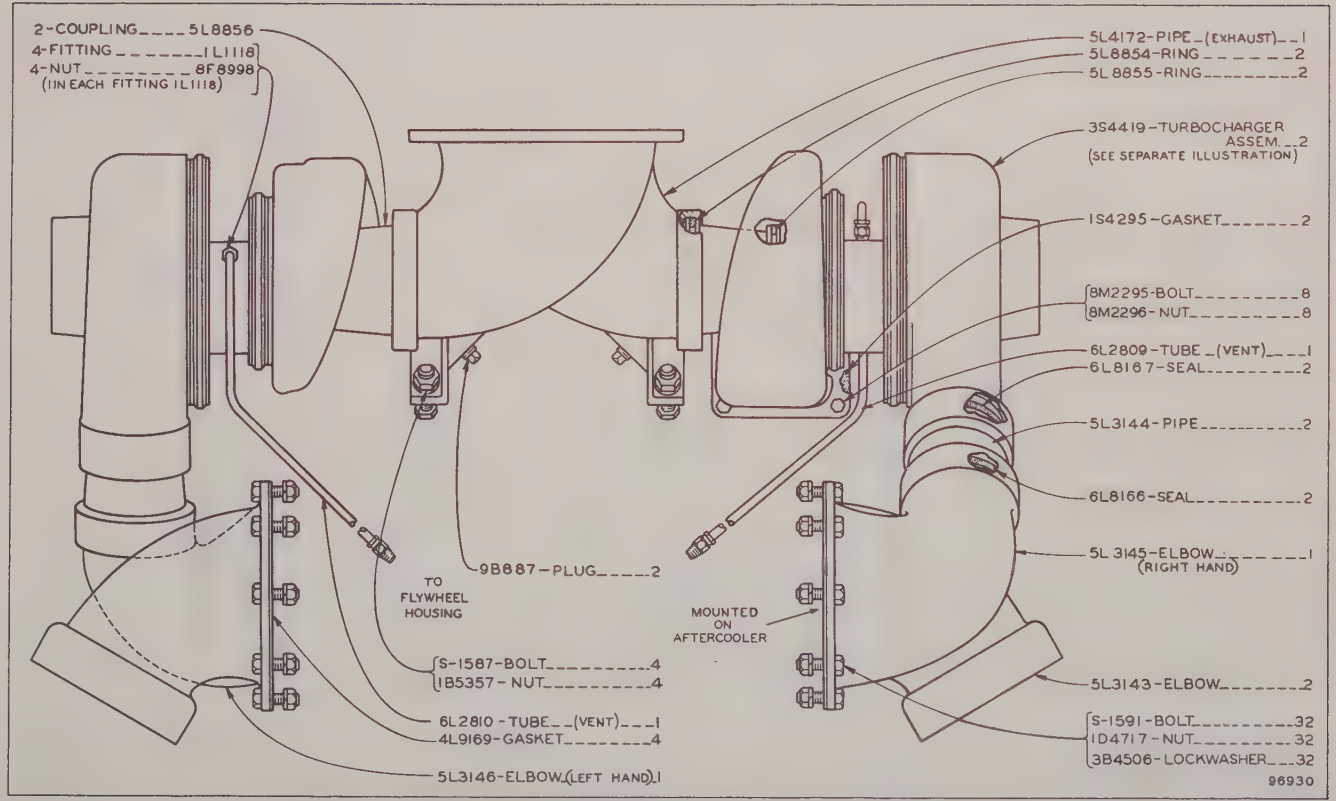

TURBOCHARGERS--REAR VIEW

SERIAL NO. 68B921 TO 68B960 AND 68B962 TO 68B1063 INCLUSIVE. PART OF 4L1129, 5L2736 & 5L7143 ARRANGEMENTS ON PAGE 5. 3S4419 TURBOCHARGER PARTS ARE ON PAGE 23. REFER ALSO TO PAGES 173 THRU 177 FOR SPECIAL PARTS

TURBOCHARGERS--REAR VIEW

SERIAL No. 68B1064 TO 68B1092 INCLUSIVE. PART OF 4L1129, 5L2736 & 5L7143 ARRANGEMENTS LISTED ON PAGE 5
3S4419 TURBOCHARGER PARTS ARE SHOWN ON PAGE 23. REFER ALSO TO PAGES 173 THROUGH 177 FOR SPECIAL PARTS

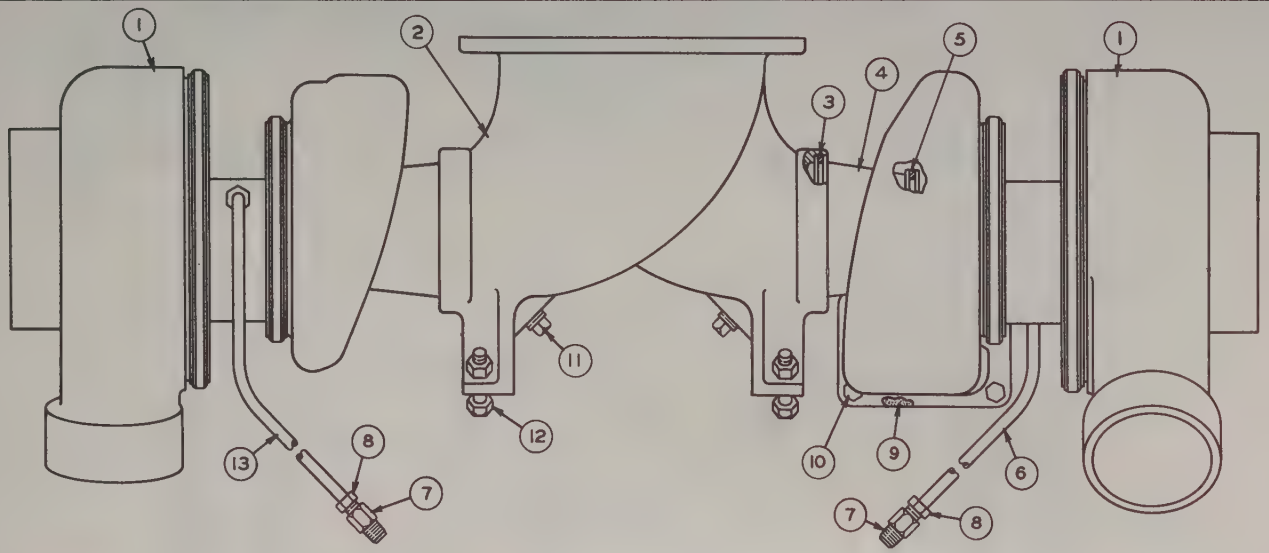

REF NO.	PART NUMBER	DESCRIPTION	QTY.
1	3S4419	TURBOCHARGER ASSEM. (See Separate Illustration)	2
2	5L4172	PIPE	1
3	5L8854	RING	2
4	5L8856	COUPLING	2
5	5L8855	RING	2

REF NO.	PART NUMBER	DESCRIPTION	QTY.
6	6L2809	TUBE (To Flywheel Housing)	1
7	1L1118	FITTING	4
8	8F8998	NUT (1 each in 1L1118 Fitting)	4
9	1S4295	GASKET	2

REF NO.	PART NUMBER	DESCRIPTION	QTY
10	8M2295	BOLT	8
	8M2296	NUT	8
11	9B887	PLUG	2
12	S-1587	BOLT	4
	1B5357	NUT	4
13	6L2810	TUBE (To Flywheel Housing)	1

79487

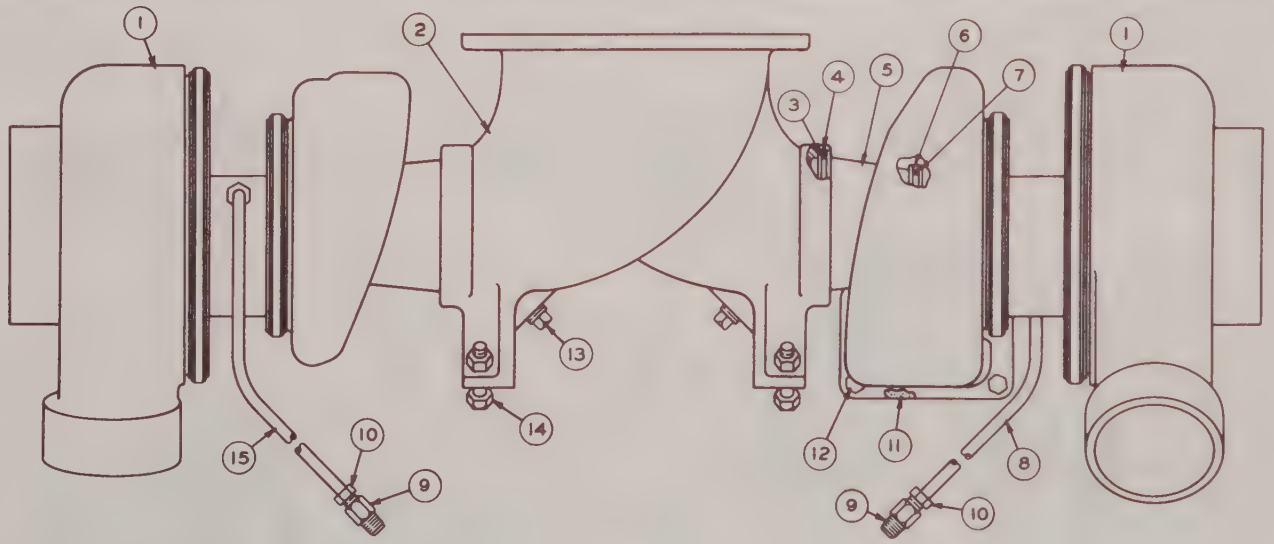

REF NO.	PART NUMBER	DESCRIPTION	QTY
1	3S4419	TURBOCHARGER ASSEM. (Separate Illustration)	2
2	5L4172	PIPE	1
3	6L2960	EXPANDER	2
4	6L2961	RING	2
5	5L8856	COUPLING	2
6	6L9541	RING	2
7	6L9542	EXPANDER	2
8	6L2809	TUBE (To Flywheel Housing)	1
9	1L1118	FITTING	4
10	8F8998	NUT	1
11	1S4295	GASKET	2
12	8M2295	BOLT	8
	8M2296	NUT	8
13	9B887	PLUG	2
14	S 1587	BOLT	4
	1B5357	NUT	4
15	6L2810	TUBE (To Flywheel Housing)	1

143510

TURBOCHARGERS--REAR VIEW

EFFECTIVE WITH SERIAL NO. 68B1093. PART OF 4L1129, 5L2736 AND 5L7143 ARRANGEMENTS LISTED ON PAGE 5
3S4419 TURBOCHARGER PARTS ARE SHOWN ON PAGE 23. REFER ALSO TO PAGES 173 THROUGH 177 FOR SPECIAL PARTS

3S4419 TURBOCHARGER ASSEMBLY

SERIAL NO. 688921 TO 688960 AND 688962-UP

PART OF TURBOCHARGERS SHOWN ON PAGES 22B, 22C AND 22D

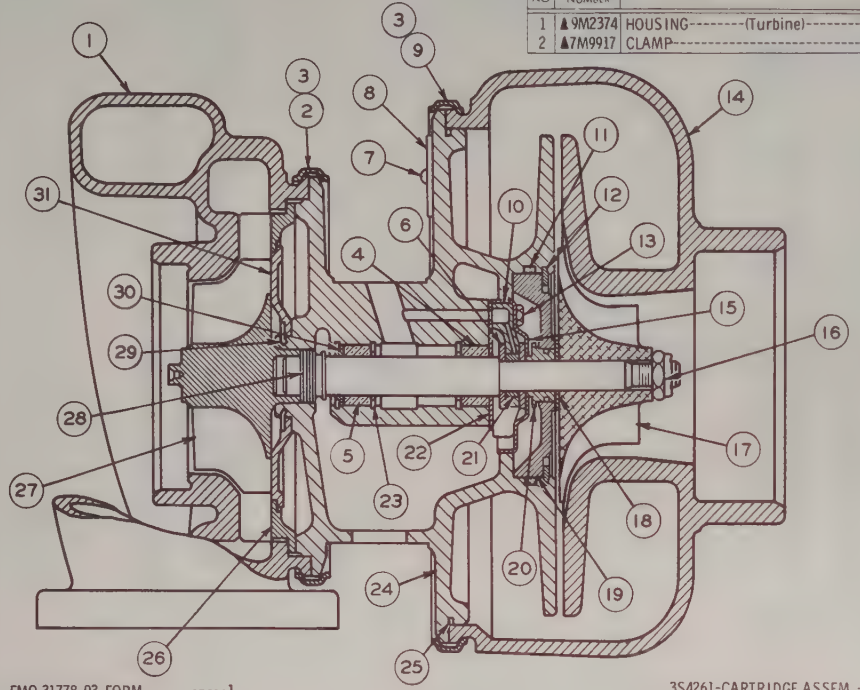

REF NO	PART NUMBER	DESCRIPTION	QTY
1	▲9M2374	HOUSING-------(Turbine)-------	1
2	▲7M9917	CLAMP----------	1

REF NO	PART NUMBER	DESCRIPTION	QTY
3	▲7M9918	NUT----------	2
	3S5854	BEARING GROUP----------	1
		Consisting of:	
4	Not Serv.	BEARING-------(Grooved)-------	1
5	Not Serv.	BEARING--------(Plain)--------	1
	FEO 36070-01	FORM---------- (Bearing Group Installation)	1
6	7M9907	RING----------	2
7	▲8H3710	SCREW----------	2
	8H3710	SCREW----------	1
8	▲7M9920	PLATE----------(Name)----------	1
	2S1507	PLATE------(Name-Cartridge)------	1
9	▲7M9916	CLAMP----------	1
10	2S1306	BEARING----------	1
11	3S1427	SEAL----------	1
12	2S1307	RING----------	1
13	7M9910	BOLT----------	3
	7M9919	PLATE----------(Lock)----------	3
14	▲3S4256	COVER-------(Compressor)-------	1
15	2S1308	DEFLECTOR----------	1
16	4M8012	NUT----------	1
17	9M495	WHEEL----------	1
18	8M7167	SHIM--------(.003" Thick)--------	1
	8M7168	SHIM--------(.005" Thick)--------	1
	8M7169	SHIM--------(.010" Thick)--------	1
19	2S1305	INSERT----------	1
20	7M9908	SLEEVE----------	1
21	7M9923	SPACER----------	1
22	2S1310	SPACER----------	1
23	7M7611	RING----------	3
24	1S5372	HOUSING----------	1
25	9M9545	SEAL----------	1
26	▲8M7944	NOZZLE----------	1
27	9M491	WHEEL AND SHAFT ASSEM. --------	1
28	4M8013	RING----------	4
29	4M6990	RING----------	1
30	1S3887	SLEEVE----------	1
31	1S2098	PLATE----------	1

FMO 31778-03-FORM----------1
(Instructions for Installing Turbocharger Assem. or Turbocharger Nozzle)

3S4261-CARTRIDGE ASSEM. -----1
(Consists of all Parts Except Those Marked ▲)

105226

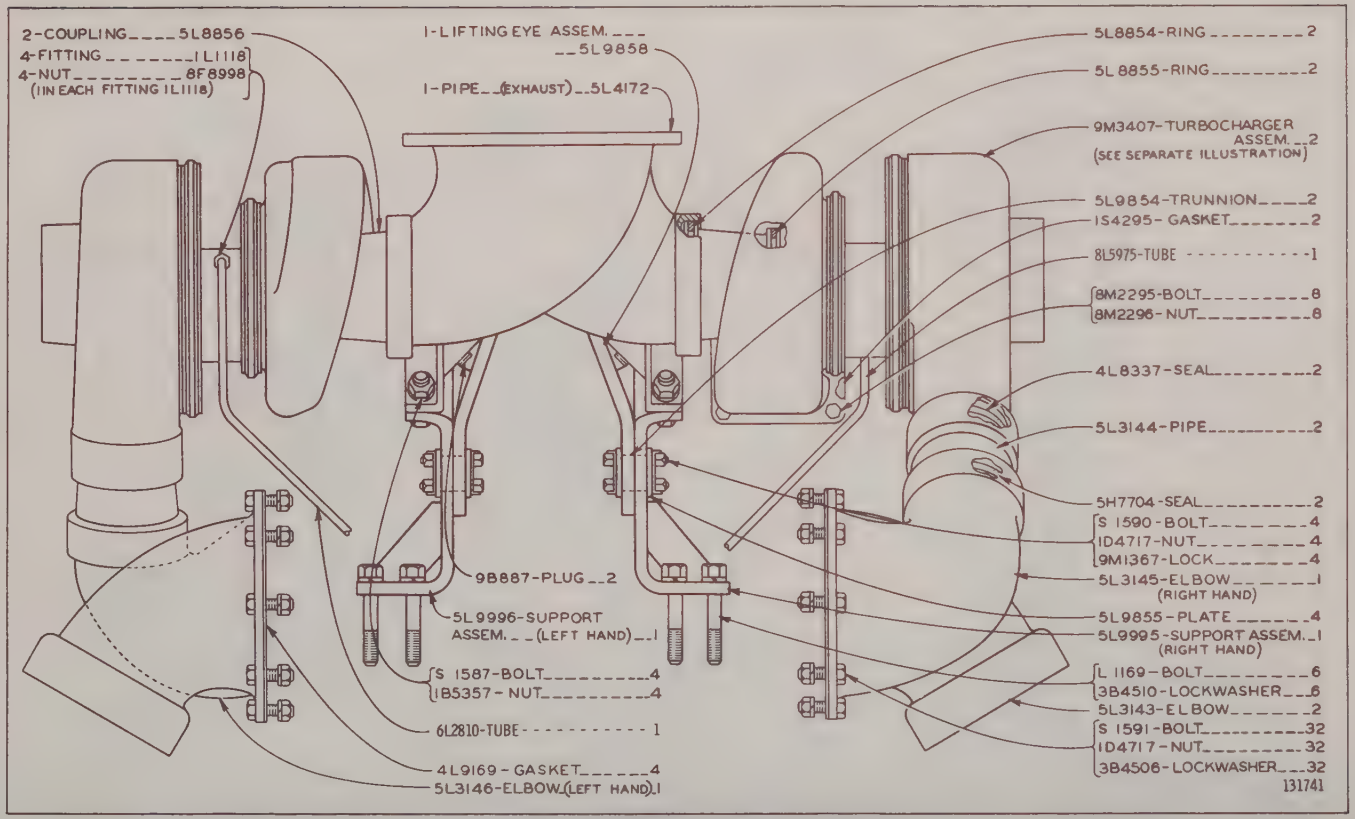

6L3066 TURBOCHARGER GROUP—Rear View
Serial No. 76B1 to 76B87 inclusive. PART OF 6L4985 S.A.E. STANDARD & 5L7143 S.A.E. OPPOSITE STANDARD ROTATION TURBOCHARGED ENGINE ARRANGEMENTS. 9M3407 Turbocharger parts are shown on Page 28

TURBOCHARGERS--REAR VIEW

SERIAL No. 76B88 TO 76B138 INCLUSIVE. PART OF 6L4985 & 5L7143 ARRANGEMENTS LISTED ON PAGE 5

9M3407 TURBOCHARGER ASSEMBLY PARTS ARE SHOWN ON PAGE 28

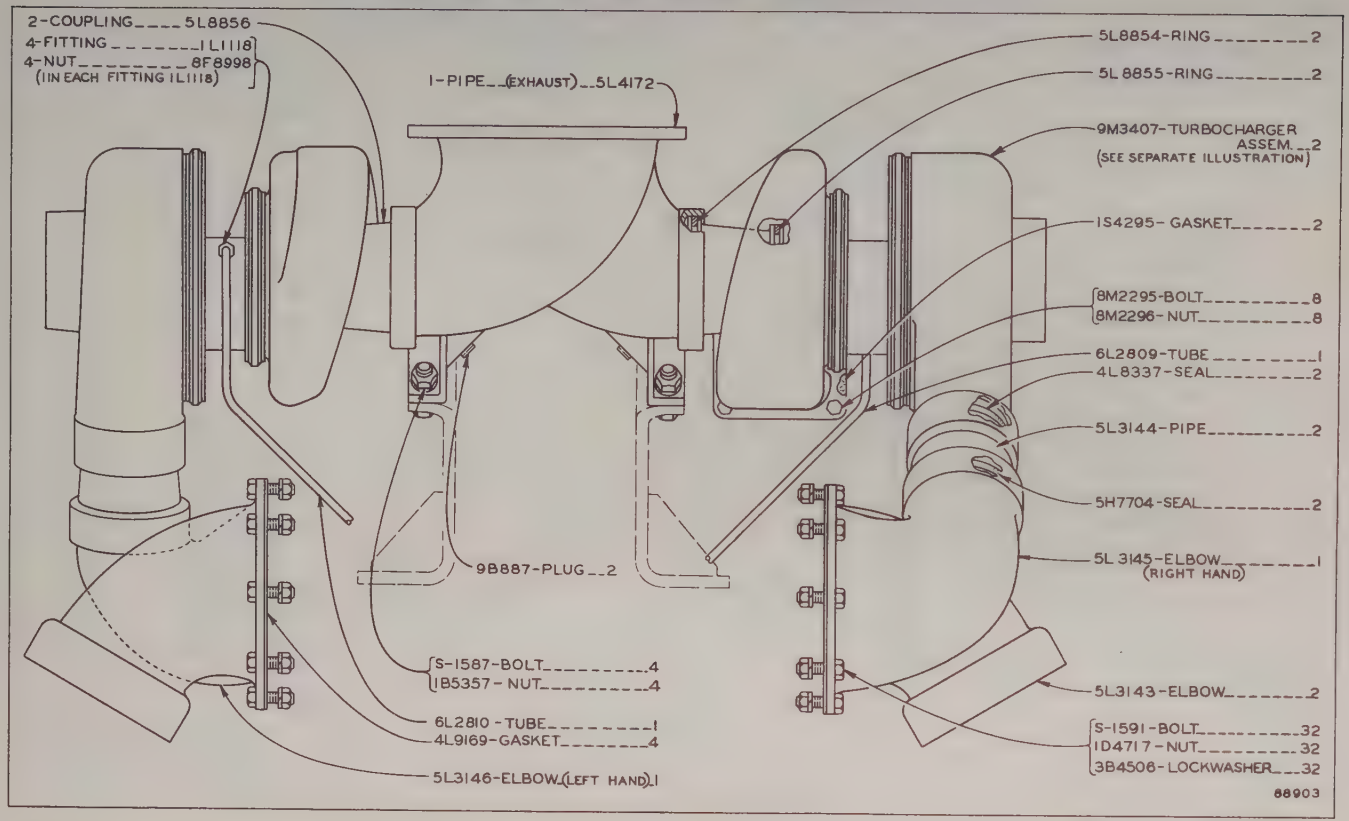

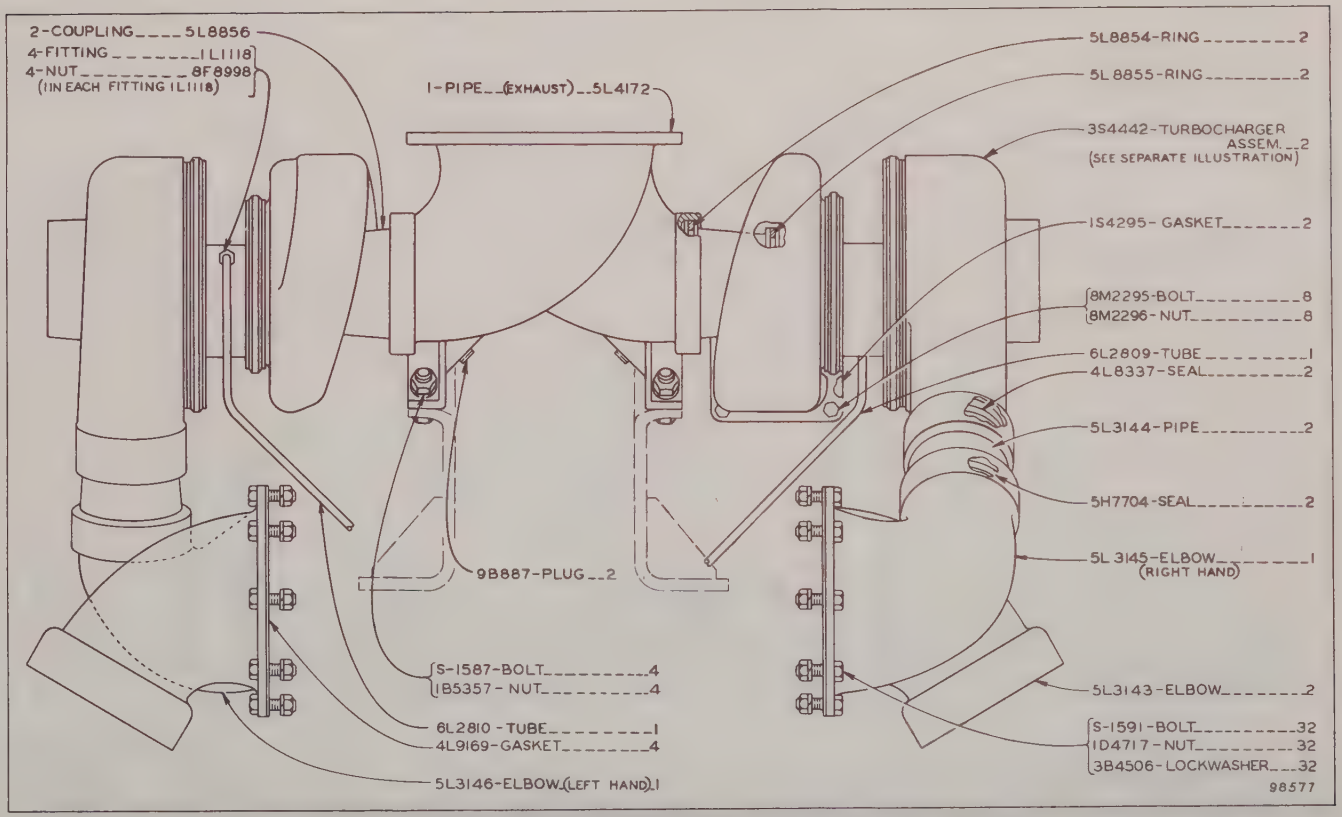

6L3066 TURBOCHARGER GROUP--REAR VIEW

SERIAL NO. 76B140, 76B141 AND 76B143 INCLUSIVE. PART OF 6L4985 & 5L7143 ARRANGEMENTS LISTED ON PAGE 5

3S4442 TURBOCHARGER PARTS ARE SHOWN ON PAGE 28A

6L3066 TURBOCHARGER GROUP—Rear View
Serial No. 76B139, 76B142 & 76B144 inclusive. PART OF 6L4985 S.A.E.
STANDARD & 5L7143 S.A.E. OPPOSITE STANDARD ROTATION TURBOCHARGED
ENGINE ARRANGEMENTS. 5S2795 Turbocharger parts are shown on Page 28B

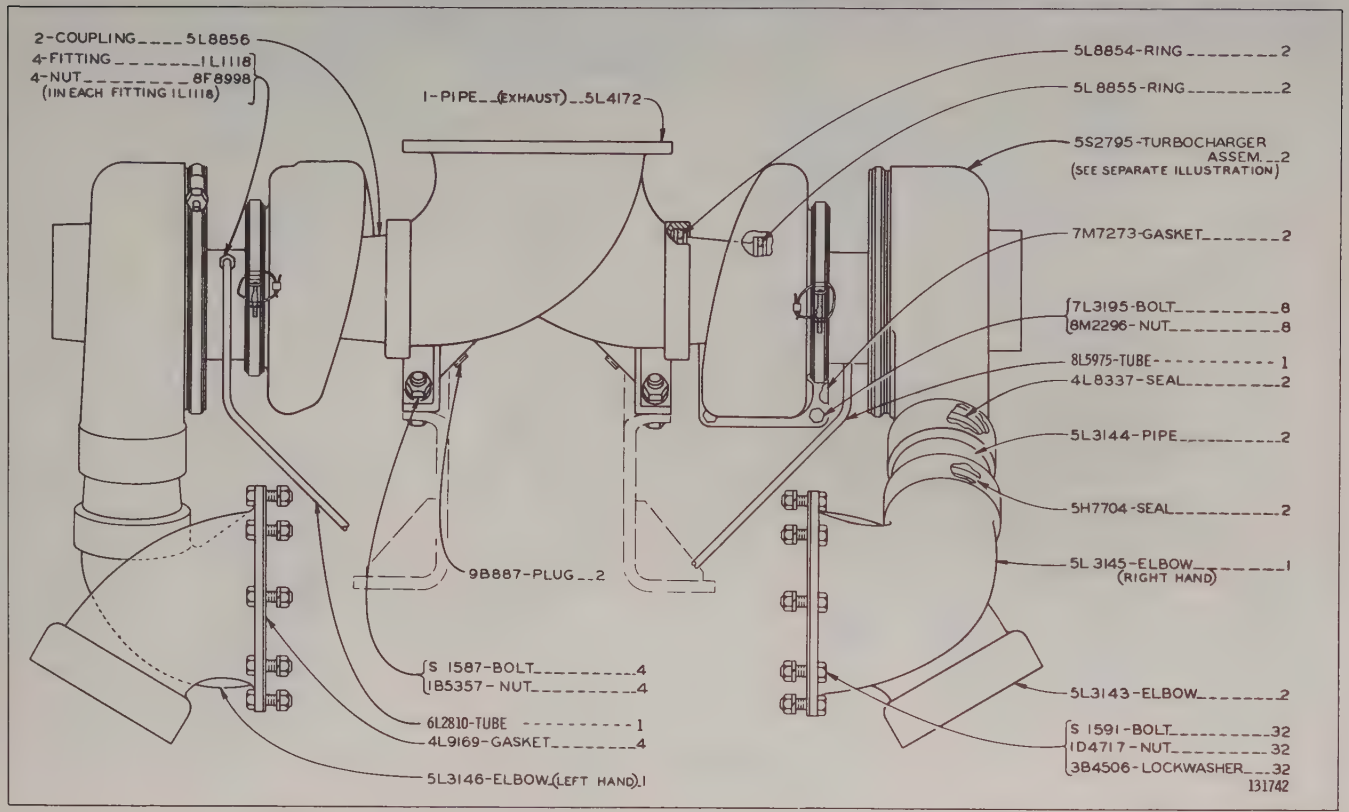

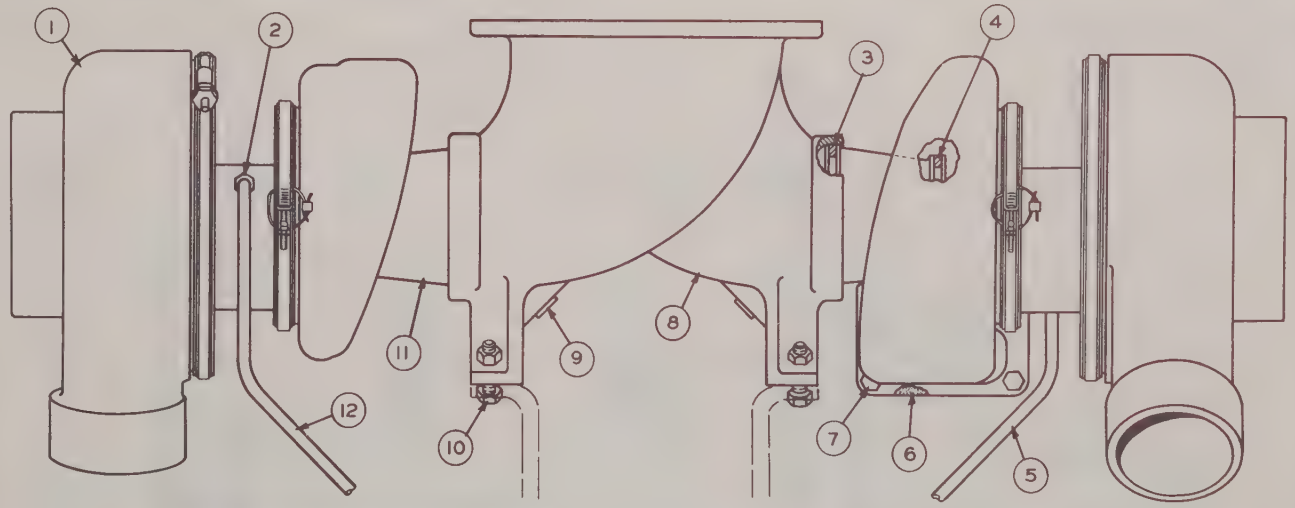

REF. NO.	PART NUMBER	DESCRIPTION	QTY
1	5S2795	TURBOCHARGER ASSEM. (See Separate Illustration)	2
2	1L1118	FITTING	4
	8F8998	NUT (1 in each 1L1118 Fitting)	4
3	5L8854	RING	2
4	5L8855	RING	2
5	8L5975	TUBE	1
6	7M7273	GASKET	2
7	7L3195	BOLT	8
	8M2296	NUT	8
8	5L4172	PIPE (Exhaust)	1
9	9B887	PLUG	2
10	S1587	BOLT	4
	1B5357	NUT	4
11	5L8856	COUPLING	2
12	6L2810	TUBE	1

131743

6L3066 TURBOCHARGER GROUP—Rear View
Serial No. 76B145 to 76B153 inclusive. PART OF 6L4985 S.A.E. STANDARD & 5L7143 S.A.E. OPPOSITE STANDARD ROTATION TURBOCHARGED ENGINE ARRANGEMENTS. 5S2795 Turbocharger parts are shown on Page 28B

6L3066 TURBOCHARGER GROUP—Rear View

Effective with Serial No. 76B154. PART OF 6L4985 S.A.E. STANDARD
& 5L7143 S.A.E. OPPOSITE STANDARD ROTATION TURBOCHARGED ENGINE ARRANGEMENTS

5S2795 & 8S2743 Turbocharger parts are shown on Pages 28B and 28C

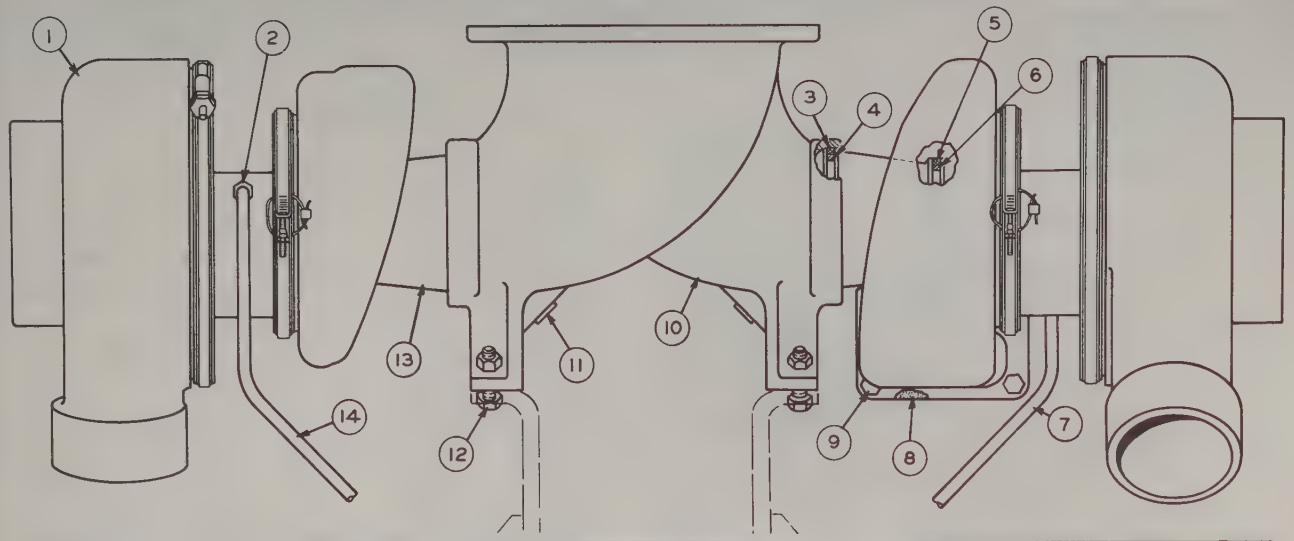

REF NO.	PART NUMBER	DESCRIPTION	QTY
1	5S2795	TURBOCHARGER ASSEM.	2
		-or-	
	8S2743	TURBOCHARGER ASSEM.	2
		(See Separate Illustration)	
2	1L1118	FITTING	4
	8F8998	NUT	4
		(1 in each 1L1118 Fitting)	
3	6L2961	RING	2

REF NO.	PART NUMBER	DESCRIPTION	QTY
4	6L2960	EXPANDER	2
5	6L9541	RING	2
6	6L9542	EXPANDER	2
7	8L5975	TUBE	1
8	7M7273	GASKET	2
9	7L3195	BOLT	8
	8M2296	NUT	8
10	5L4172	PIPE----------(Exhaust)	1

REF NO.	PART NUMBER	DESCRIPTION	QTY
11	9B887	PLUG	2
12	1S1587	BOLT	4
	1B5357	NUT	4
13	5L8856	COUPLING	2
14	6L2810	TUBE	1

131744

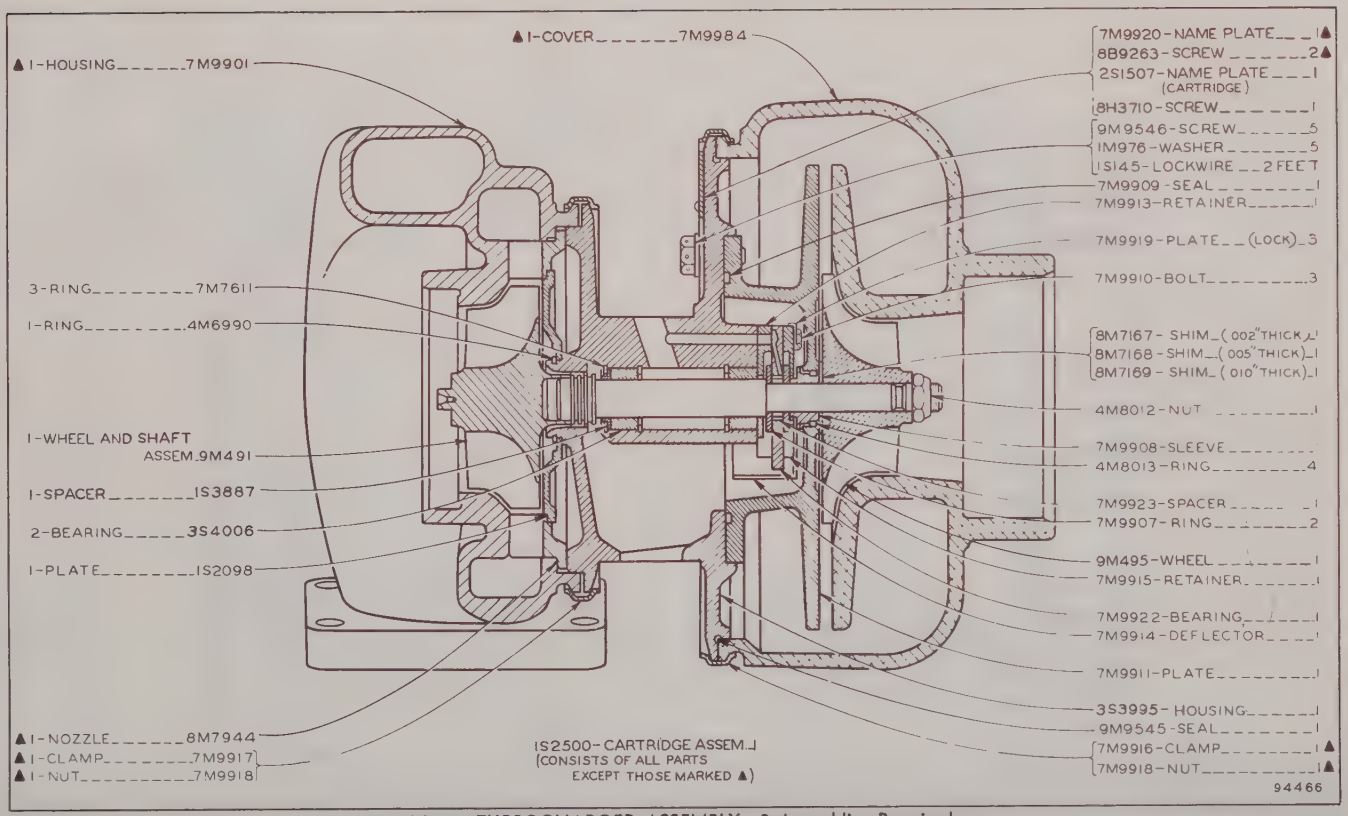

8M1780 TURBOCHARGER ASSEMBLY—2 Assemblies Required
Serial No. 68B675 to 68B695, 68B699 and 68B792—Up
Part of Turbochargers shown on Pages 21 and 23

1S520 TURBOCHARGER ASSEMBLY—2 Assemblies Required

Serial No. 68B696 to 68B698 and 68B700 to 68B791 inclusive

Part of Turbochargers shown on Pages 21 and 22

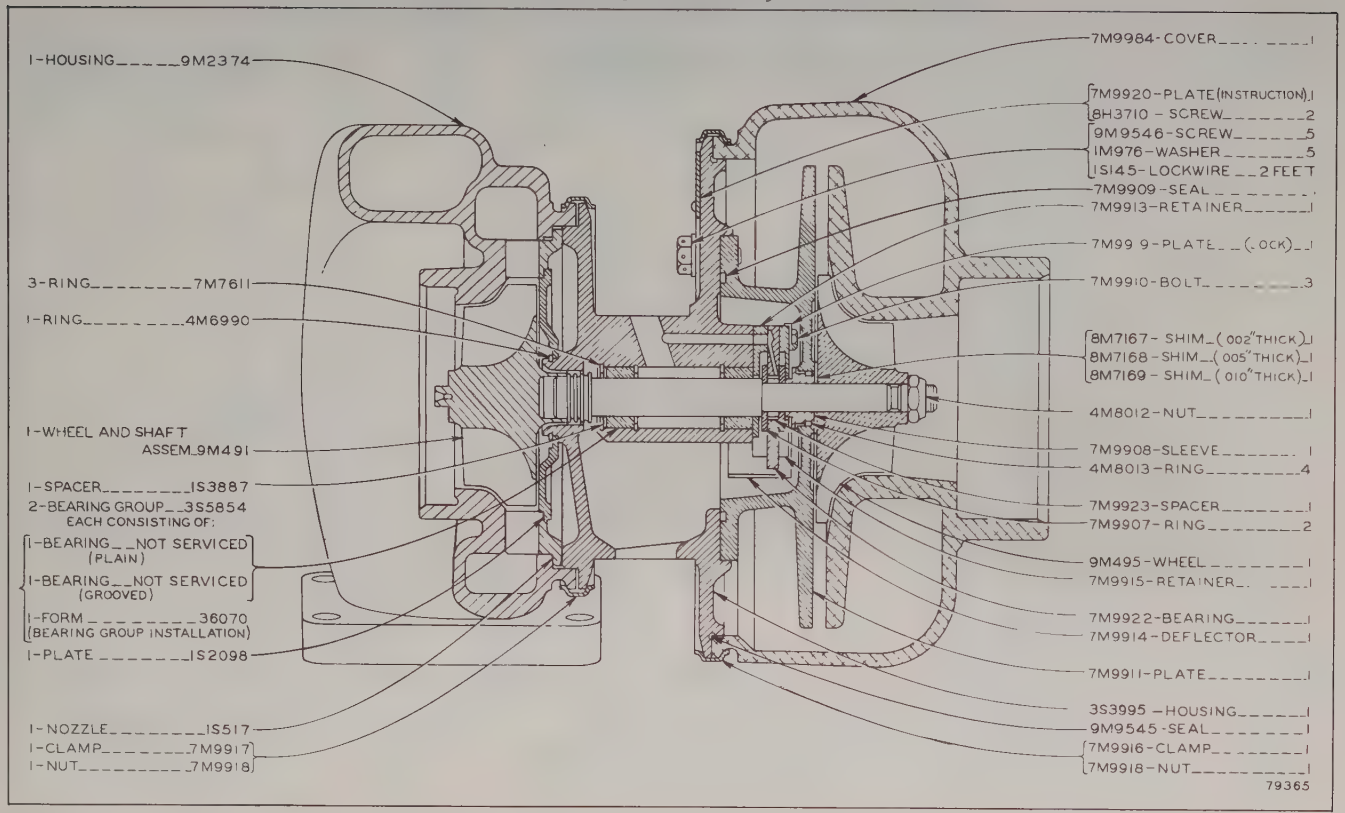

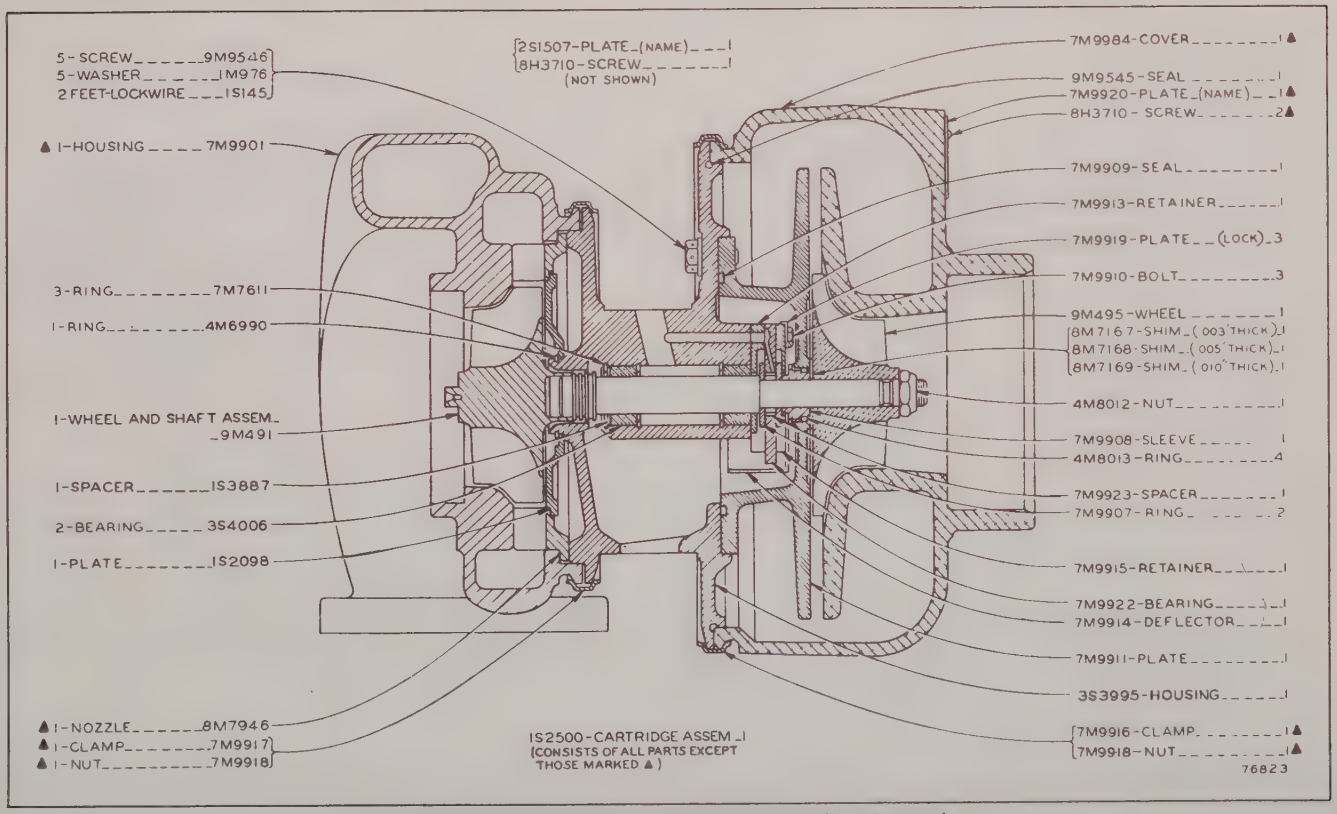

9M3407 TURBOCHARGER ASSEMBLY—2 Assemblies Required

Part of Turbochargers shown on Pages 24 and 25

3S4442 TURBOCHARGER ASSEMBLY
SERIAL No. 76B140, 76B141 AND 76B143 INCLUSIVE
PART OF 6L3066 TURBOCHARGER GROUP SHOWN ON PAGE 24B

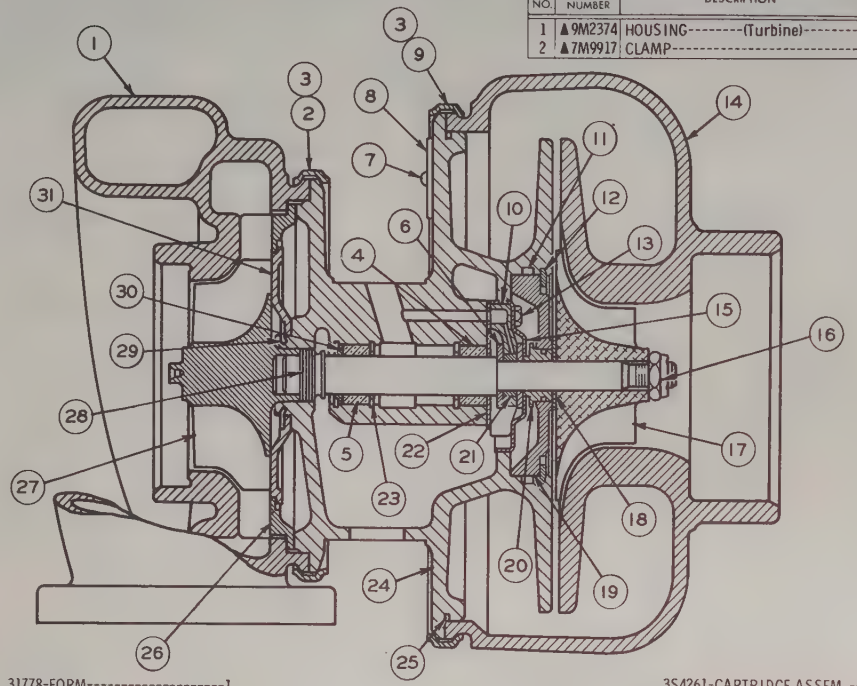

REF. NO.	PART NUMBER	DESCRIPTION	QTY.
1	▲9M2374	HOUSING--------(Turbine)--------	1
2	▲7M9917	CLAMP----------	1

REF. NO.	PART NUMBER	DESCRIPTION	QTY.
3	▲7M9918	NUT----------	2
	3S5854	BEARING GROUP----------	1
		Consisting of:	
4	Not Serv.	BEARING-------(Grooved)-------	1
5	Not Serv.	BEARING--------(Plain)---------	1
	36070	FORM----------	1
		(Bearing Group Installation)	
6	7M9907	RING----------	2
7	▲8H3710	SCREW----------	1
	8H3710	SCREW----------	1
8	▲7M9920	PLATE----------(Name)----------	1
	2S1507	PLATE------(Name-Cartridge)------	1
9	▲7M9916	CLAMP----------	1
10	2S1306	BEARING----------	1
11	3S1427	SEAL----------	1
12	2S1307	RING----------	1
13	7M9910	BOLT----------	3
	7M9919	PLATE----------(Lock)----------	3
14	▲3S4256	COVER-------(Compressor)--------	1
15	2S1308	DEFLECTOR----------	1
16	4M8012	NUT----------	1
17	9M495	WHEEL----------	1
18	8M7167	SHIM--------(.003" Thick)--------	1
	8M7168	SHIM--------(.005" Thick)--------	1
	8M7169	SHIM--------(.010" Thick)--------	1
19	2S1305	INSERT----------	1
20	7M9908	SLEEVE----------	1
21	7M9923	SPACER----------	1
22	2S1310	SPACER----------	1
23	7M7611	RING----------	3
24	1S5372	HOUSING----------	1
25	9M9545	SEAL----------	1
26	▲8M7946	NOZZLE----------	1
27	9M491	WHEEL AND SHAFT ASSEM.--------	1
28	4M8013	RING----------	4
29	4M6990	RING----------	1
30	1S3887	SLEEVE----------	1
31	1S2098	PLATE----------	1

31778-FORM----------1
(Instructions for Installing Turbocharger Assem. or Turbocharger Nozzle)

3S4261-CARTRIDGE ASSEM. -----1
(Consists of all Parts Except Those Marked ▲)

98578

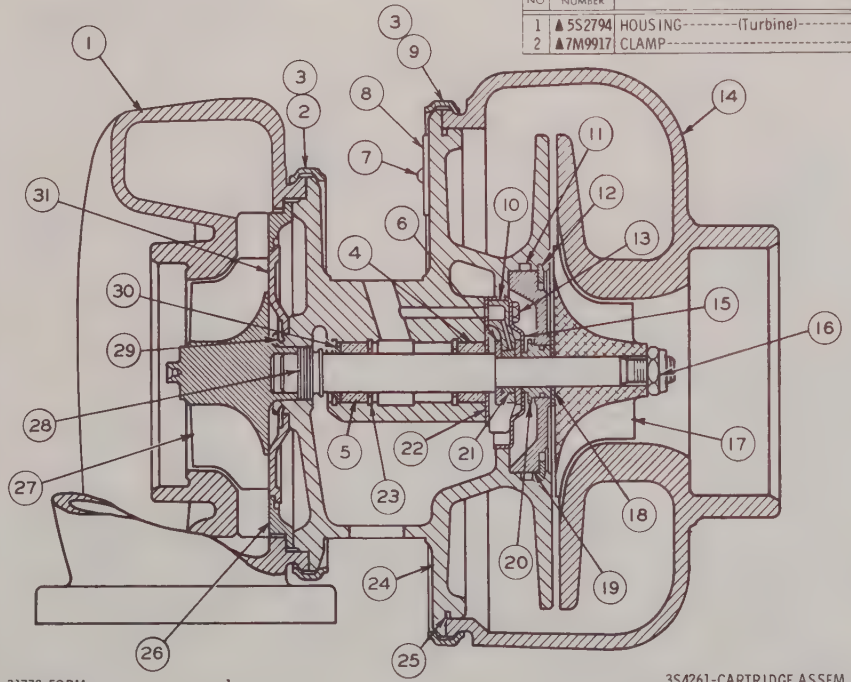

REF NO	PART NUMBER	DESCRIPTION	QTY
1	▲5S2794	HOUSING--------(Turbine)--------	1
2	▲7M9917	CLAMP----------	1

REF NO.	PART NUMBER	DESCRIPTION	QTY
3	▲7M9918	NUT----------	2
	3S5854	BEARING GROUP----------	1
		Consisting of:	
4	Not Serv.	BEARING-------(Grooved)-------	1
5	Not Serv.	BEARING ------ (Plain)---------	1
	36070	FORM----------	1
		(Bearing Group Installation)	
6	7M9907	RING----------	2
7	▲8H3710	SCREW----------	1
	8H3710	SCREW----------	1
8	▲7M9920	PLATE----------(Name)---------	1
	2S1507	PLATE------(Name-Cartridge)------	1
9	▲7M9916	CLAMP----------	1
10	2S1306	BEARING----------	1
11	3S1427	SEAL----------	1
12	2S1307	RING----------	1
13	7M9910	BOLT----------	3
	7M9919	PLATE----------(Lock)---------	3
14	▲3S4256	COVER-------(Compressor)-------	1
15	2S1308	DEFLECTOR----------	1
16	4M8012	NUT----------	1
17	9M495	WHEEL----------	1
18	8M7167	SHIM--------(.003" Thick)-------	1
	8M7168	SHIM--------(.005" Thick)-------	1
	8M7169	SHIM--------(.010" Thick)-------	1
19	2S1305	INSERT----------	1
20	7M9908	SLEEVE----------	1
21	7M9923	SPACER----------	1
22	2S1310	SPACER----------	1
23	7M7611	RING----------	3
24	1S5372	HOUSING----------	1
25	9M9545	SEAL----------	1
26	▲8M7945	NOZZLE----------	1
27	9M491	WHEEL AND SHAFT ASSEM.-------	1
28	4M8013	RING----------	4
29	4M6990	RING----------	1
30	1S3887	SLEEVE----------	1
31	1S2098	PLATE----------	1

31778-FORM----------1
(Instructions for Installing Turbocharger Assem. or Turbocharger Nozzle)

3S4261-CARTRIDGE ASSEM.-----1
(Consists of all Parts Except Those Marked ▲)

98580

5S2795 TURBOCHARGER ASSEMBLY
Serial No. 76B139, 76B142 and 76B144 to 76B336 inclusive
Part of 6L3066 Turbocharger Groups shown on Pages 24C, 24D and 25

8S2743 TURBOCHARGER ASSEMBLY

Effective with Serial No. 76B337

Part of 6L3066 Turbocharger Group shown on Page 25

FM031778-FORM ----------1
(Turbocharger Installation Check List)

FE034419-FORM----------1
(Instructions for installing Turbocharger Vent Lines)

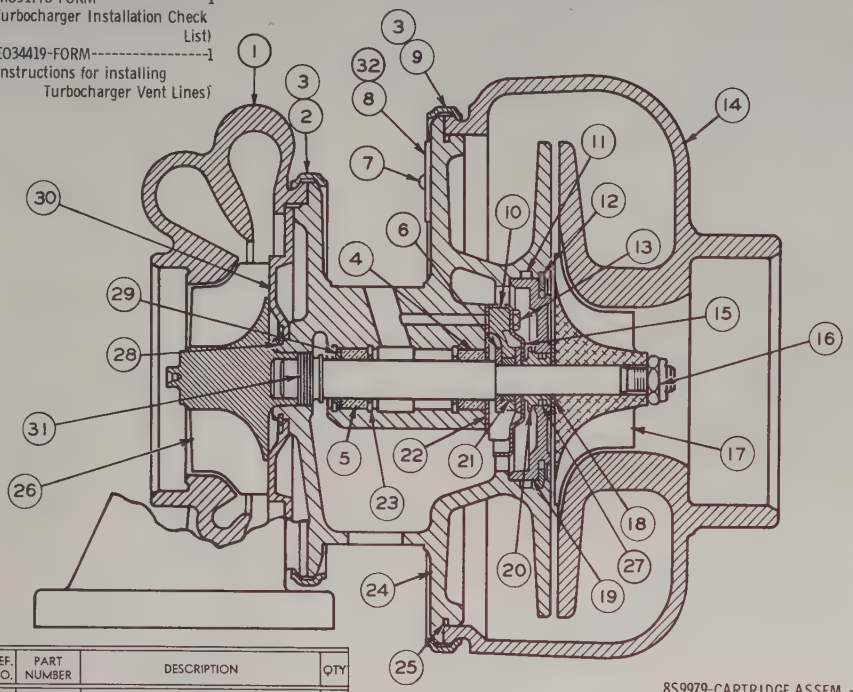

REF. NO.	PART NUMBER	DESCRIPTION	QTY
31	4S9248	RING----------	2
32	2S1507	PLATE-------(Name-Cartridge)-----	1

8S9979-CARTRIDGE ASSEM. -----1
(Consists of all Parts Except Those Marked ▲)

REF. NO.	PART NUMBER	DESCRIPTION	QTY.
1	9S1516▲	HOUSING--------(Turbine)--------	1
2	7M9917▲	CLAMP----------	1
3	7M9918▲	NUT----------	2
	8S2736	BEARING GROUP----------	1
		Consisting of:	
4	Not Serv.	BEARING-------(Grooved)-------	1
5	Not Serv.	BEARING--------(Plain)--------	1
	FE036070-01	FORM----------	1
		(Bearing Group Installation)	
6	2S1185	RING----------	2
7	8H3710	SCREW----------	3
8	7M9920▲	PLATE----------(Name)----------	1
9	7M9916▲	CLAMP----------	1
10	8S2738	BEARING----------	1
11	3S1427	SEAL----------	1
12	2S1307	RING----------	1
13	7M9831	SCREW----------	3
	7M9919	PLATE----------(Lock)----------	3
14	3S4256▲	COVER-------(Compressor)--------	1
15	2S1308	DEFLECTOR----------	1
16	4M8012	NUT----------	1
17	9M495	WHEEL----------	1
18	8M7167	SHIM--------(.003" Thick)--------	1
	8M7168	SHIM--------(.005" Thick)--------	1
	8M7169	SHIM--------(.010" Thick)--------	1
19	2S1305	INSERT----------	1
20	7M9908	SLEEVE----------	1
21	7M9923	SPACER----------	1
22	2S1310	SPACER----------	1
23	7M7611	RING----------	3
24	1S5372	HOUSING----------	1
25	9M9545	SEAL----------	1
26	8S2740	WHEEL AND SHAFT ASSEM. --------	1
27	4M8013	RING----------	2
28	4M6990	RING----------	1
29	1S3887	SLEEVE----------	1
30	8S2739	PLATE----------	1

107987

6L3175 TURBOCHARGER LUBRICATION VALVE GROUP

Serial No. 68B675 to 68B919 inclusive and 76B1 to 76B107 inclusive

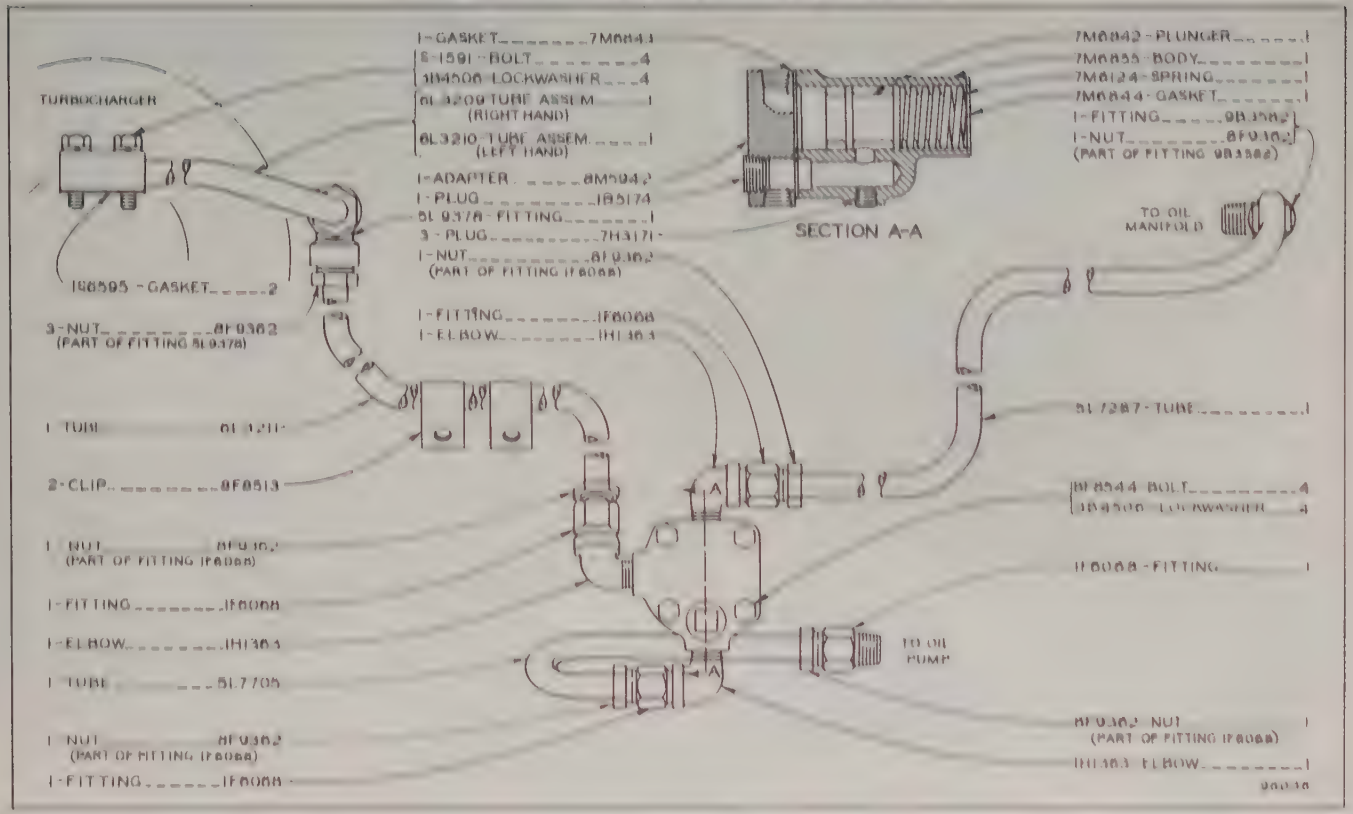

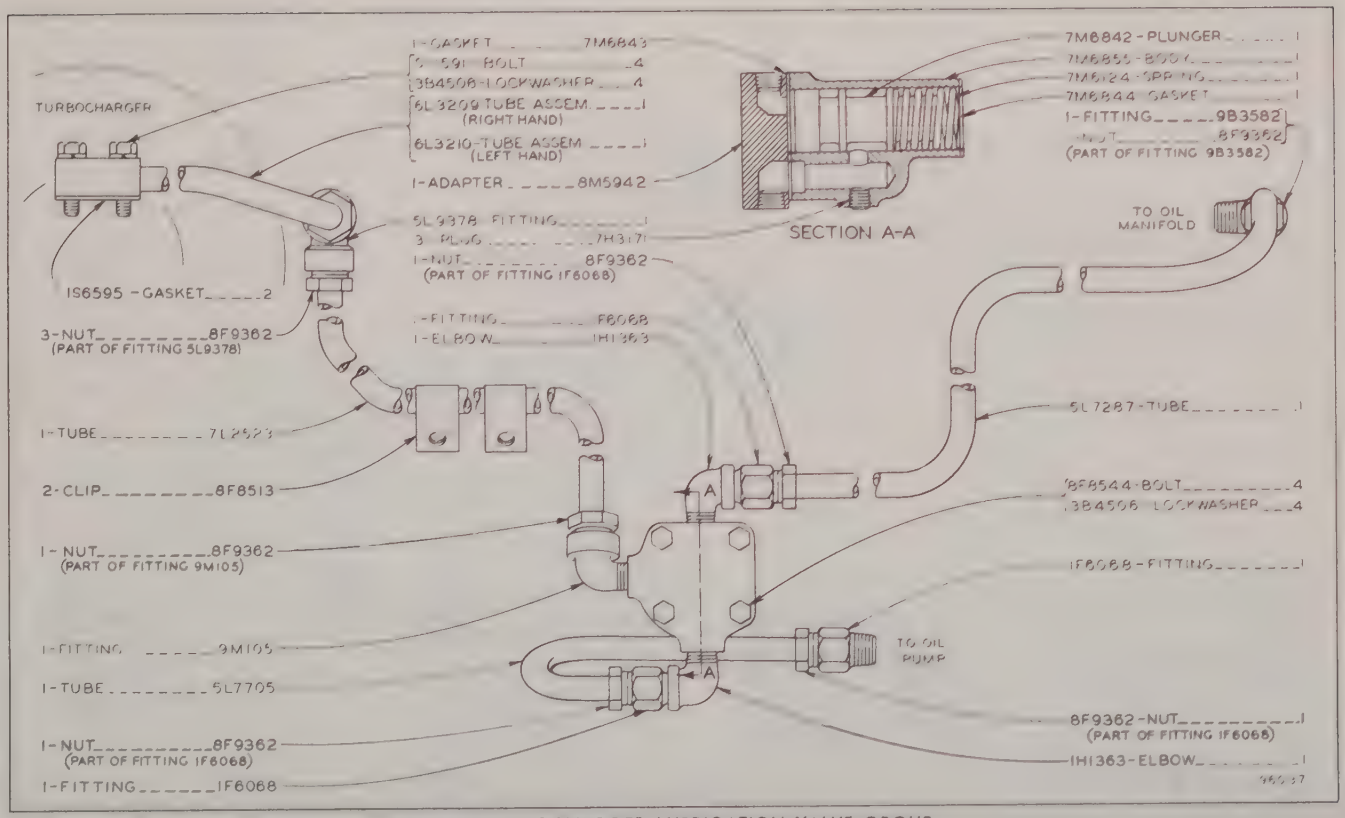

6L3175 TURBOCHARGER LUBRICATION VALVE GROUP
Effective with Serial No. 68B920—Up and 76B108—Up

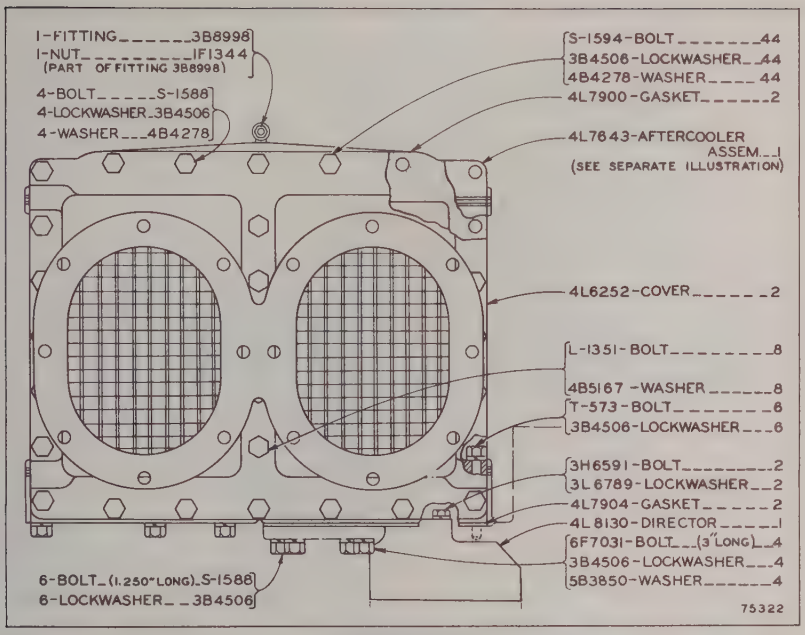

AFTERCOOLER

SERIAL NO. 68B675 TO 68B1063 INCLUSIVE & 76B1 TO 76B144 INCLUSIVE

REFER ALSO TO PAGES 147 AND 148 FOR SPECIAL PARTS

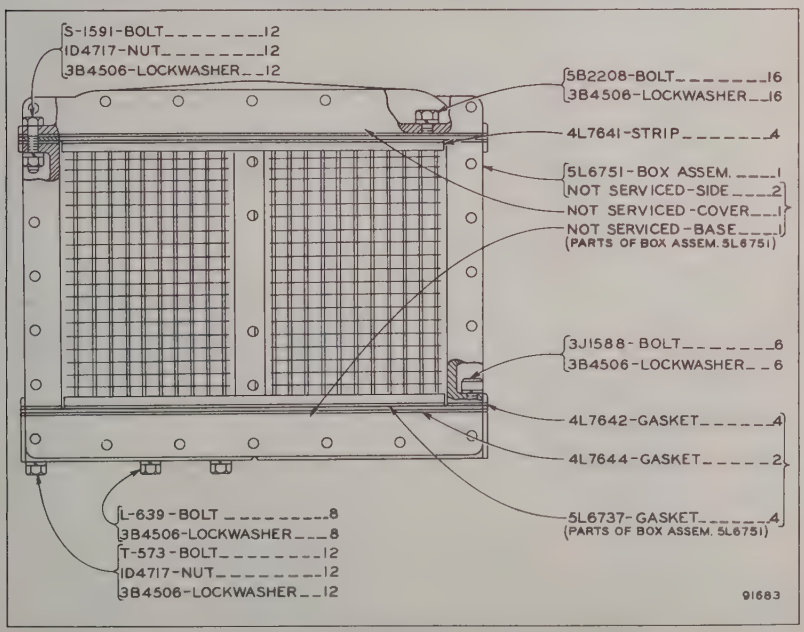

4L7643 AFTERCOOLER ASSEMBLY
PART OF AFTERCOOLER

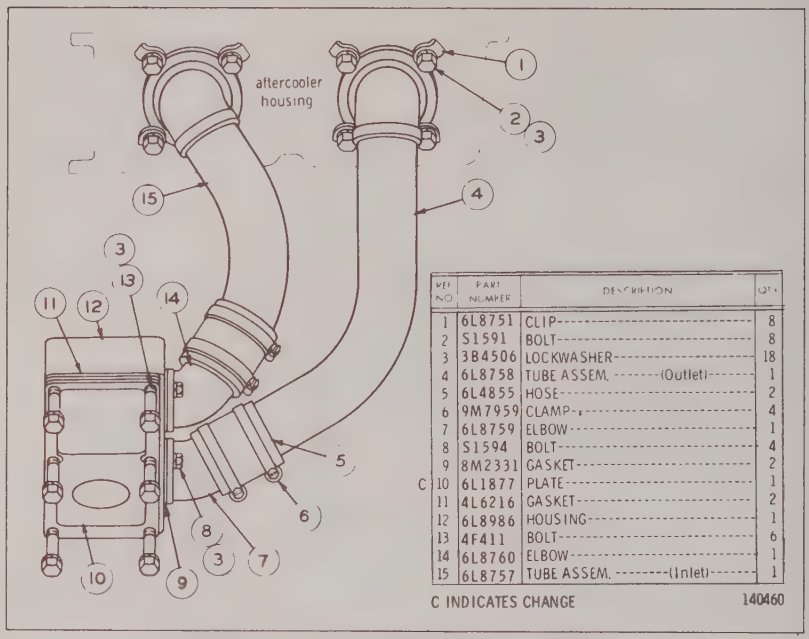

REF NO.	PART NUMBER	DESCRIPTION	QTY
1	6L8751	CLIP	8
2	S1591	BOLT	8
3	3B4506	LOCKWASHER	18
4	6L8758	TUBE ASSEM. (Outlet)	1
5	6L4855	HOSE	2
6	9M7959	CLAMP	4
7	6L8759	ELBOW	1
8	S1594	BOLT	4
9	8M2331	GASKET	2
C 10	6L1877	PLATE	1
11	4L6216	GASKET	2
12	6L8986	HOUSING	1
13	4F411	BOLT	6
14	6L8760	ELBOW	1
15	6L8757	TUBE ASSEM. (Inlet)	1

C INDICATES CHANGE 140460

6L8992 AFTERCOOLER CONNECTIONS GROUP
Serial No. 68B1064—Up and 76B145 to 76B349 inclusive

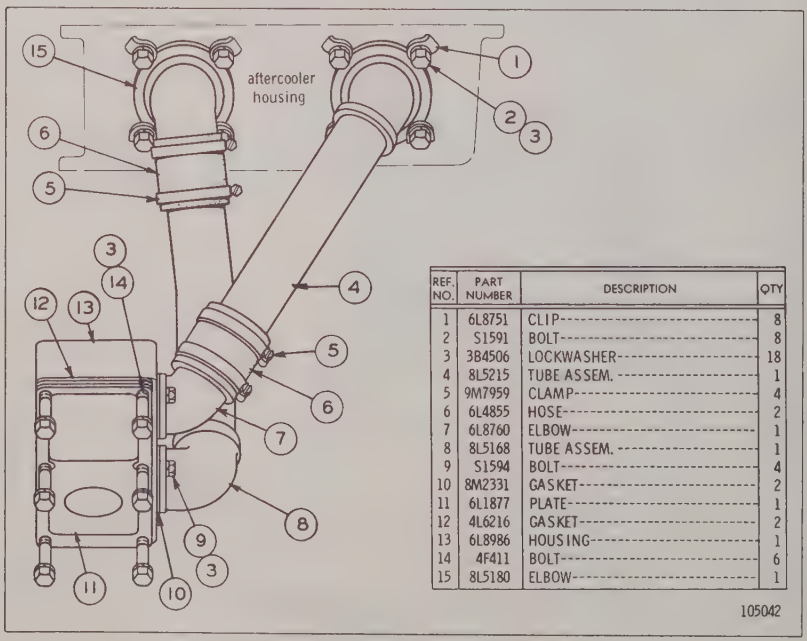

REF. NO.	PART NUMBER	DESCRIPTION	QTY
1	6L8751	CLIP	8
2	S1591	BOLT	8
3	3B4506	LOCKWASHER	18
4	8L5215	TUBE ASSEM.	1
5	9M7959	CLAMP	4
6	6L4855	HOSE	2
7	6L8760	ELBOW	1
8	8L5168	TUBE ASSEM.	1
9	S1594	BOLT	4
10	8M2331	GASKET	2
11	6L1877	PLATE	1
12	4L6216	GASKET	2
13	6L8986	HOUSING	1
14	4F411	BOLT	6
15	8L5180	ELBOW	1

105042

8L5025 AFTERCOOLER CONNECTIONS GROUP
Serial No. 76B350—Up

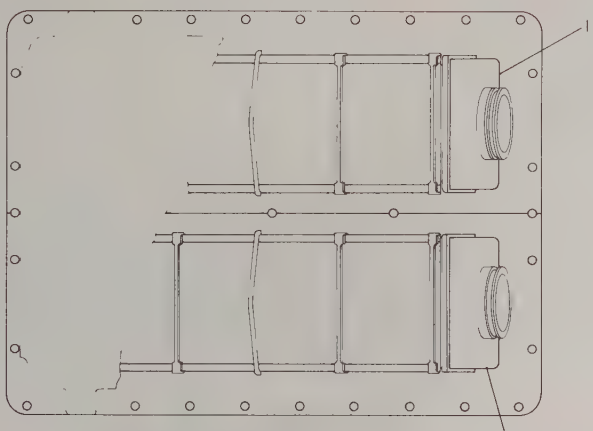

REF. NO.	PART NUMBER	DESCRIPTION	QTY
1	3N4363	CORE ASSEM.	1
2	3N4364	CORE ASSEM.	1

142869

3N6620 SEA WATER AFTERCOOLER GROUP
Serial No. 68B1064—Up. PROVIDES COPPER NICKEL AFTERCOOLER CORES FOR USE WITH STANDARD JACKET WATER COOLING. AN ATTACHMENT

6L6292 AFTERCOOLER GROUP--JACKET WATER
EFFECTIVE WITH SERIAL No. 68B1064-UP AND 76B145-UP
REFER ALSO TO PAGES 147 AND 148 FOR SPECIAL PARTS

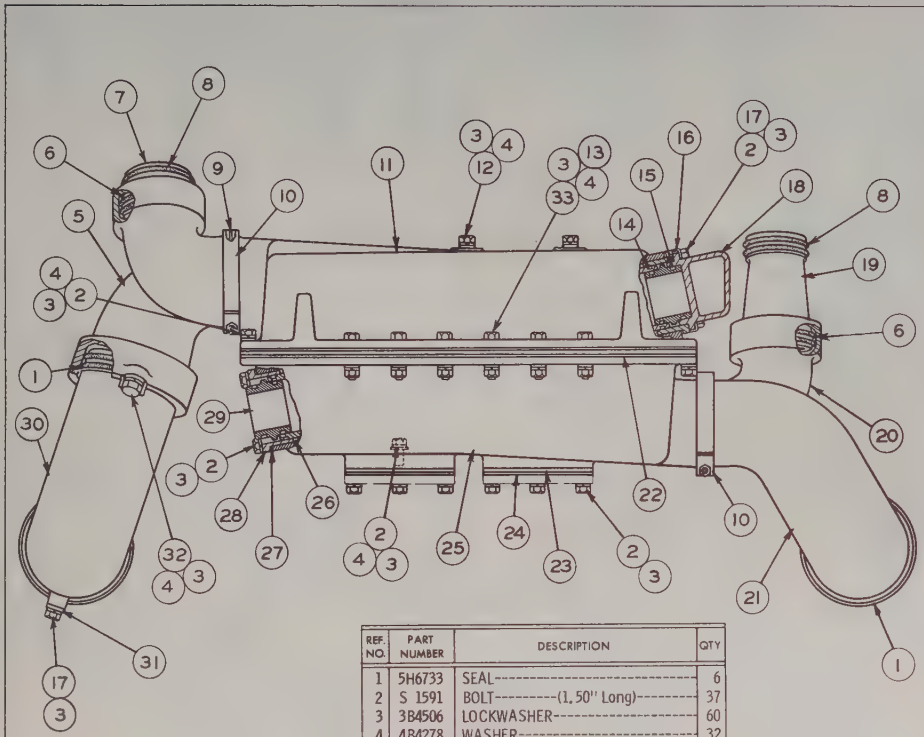

REF. NO.	PART NUMBER	DESCRIPTION	QTY
1	5H6733	SEAL	6
2	S 1591	BOLT (1.50" Long)	37
3	3B4506	LOCKWASHER	60
4	4B4278	WASHER	32

REF. NO	PART NUMBER	DESCRIPTION	QTY
5	6L6482	ELBOW	1
6	6L8166	SEAL	4
7	6L6484	PIPE	1
8	6L8167	SEAL	4
9	6L6487	GASKET	4
10	5L7631	CLAMP	4
11	6L6293	HOUSING	1
12	4F411	BOLT	3
13	1D4717	NUT	12
14	9F4446	SEAL	4
15	2H2665	SEAL	8
16	6L8751	CLIP	4
17	S 1594	BOLT (1.00" Long)	6
18	6L6491	PIPE	1
19	6L6483	PIPE	1
20	6L6481	ELBOW	2
21	6L6485	ELBOW	1
22	6L6480	GASKET	2
23	6L6494	PLATE	2
24	4L7904	GASKET	2
25	6L6294	HOUSING	1
26	6L6297	CORE ASSEM.	1
	6L6295	CORE ASSEM.	1
27	6L6489	GASKET	4
28	6L6488	FLANGE	4
29	6L6490	SLEEVE	4
30	6L6486	ELBOW	1
31	6L6493	LOCK	1
32	1A2029	BOLT	1
	1S6908	PLATE	1
33	S1591	BOLT (1.50" long)	1
	S1571	BOLT (1.75" long)	12
		-OR-	
	S1571	BOLT (1.75" long)	13

108641

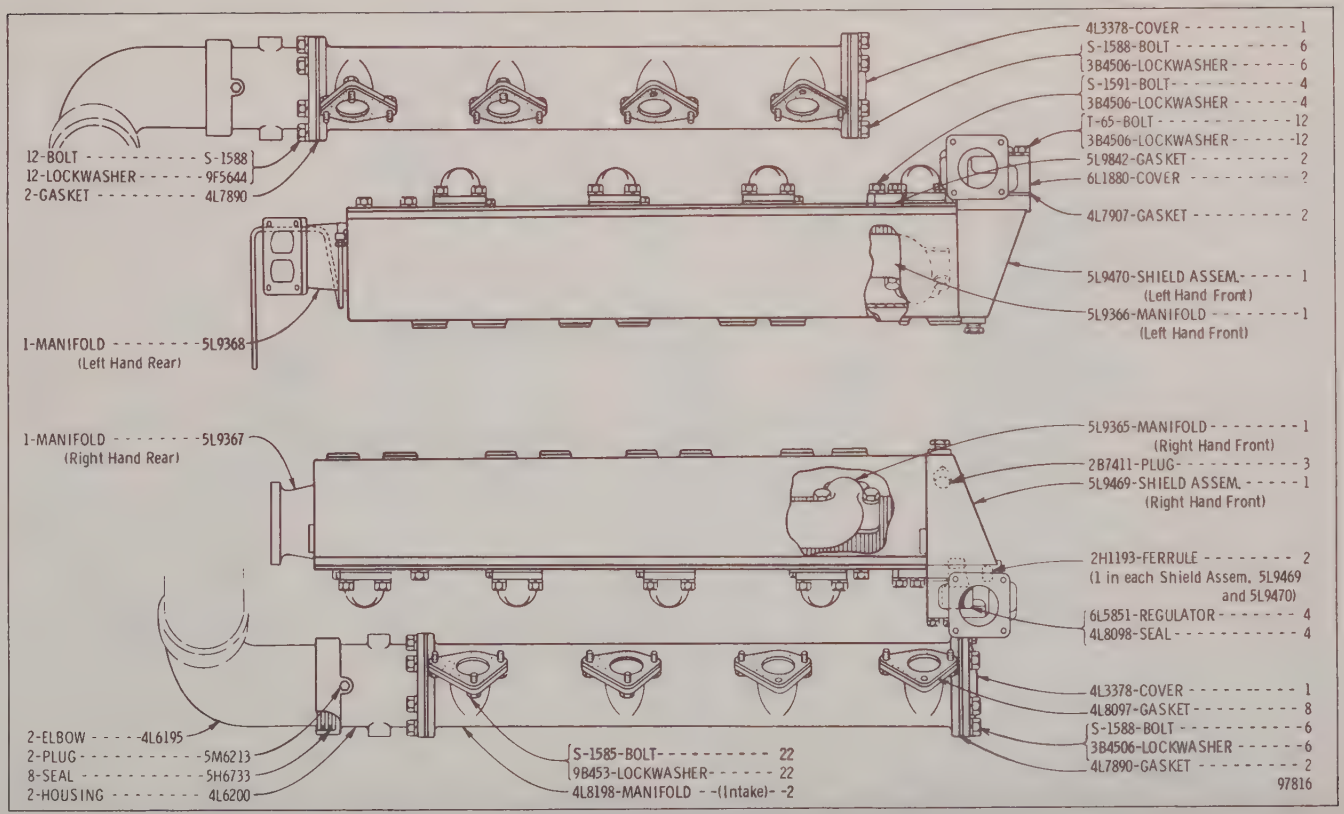

MANIFOLDS--PART 1

SERIAL NO. 76B1 TO 76B129 INCLUSIVE. PART OF 6L4985 & 5L7143 ARRANGEMENTS LISTED ON PAGE 5

REFER ALSO TO PAGES 151 THROUGH 153 FOR SPECIAL PARTS

MANIFOLDS--PART 2

SERIAL NO. 76B1 TO 76B129 INCLUSIVE. PART OF 6L4985 & 5L7143 ARRANGEMENTS LISTED ON PAGE 5

REFER ALSO TO PAGES 151 THROUGH 153 FOR SPECIAL PARTS

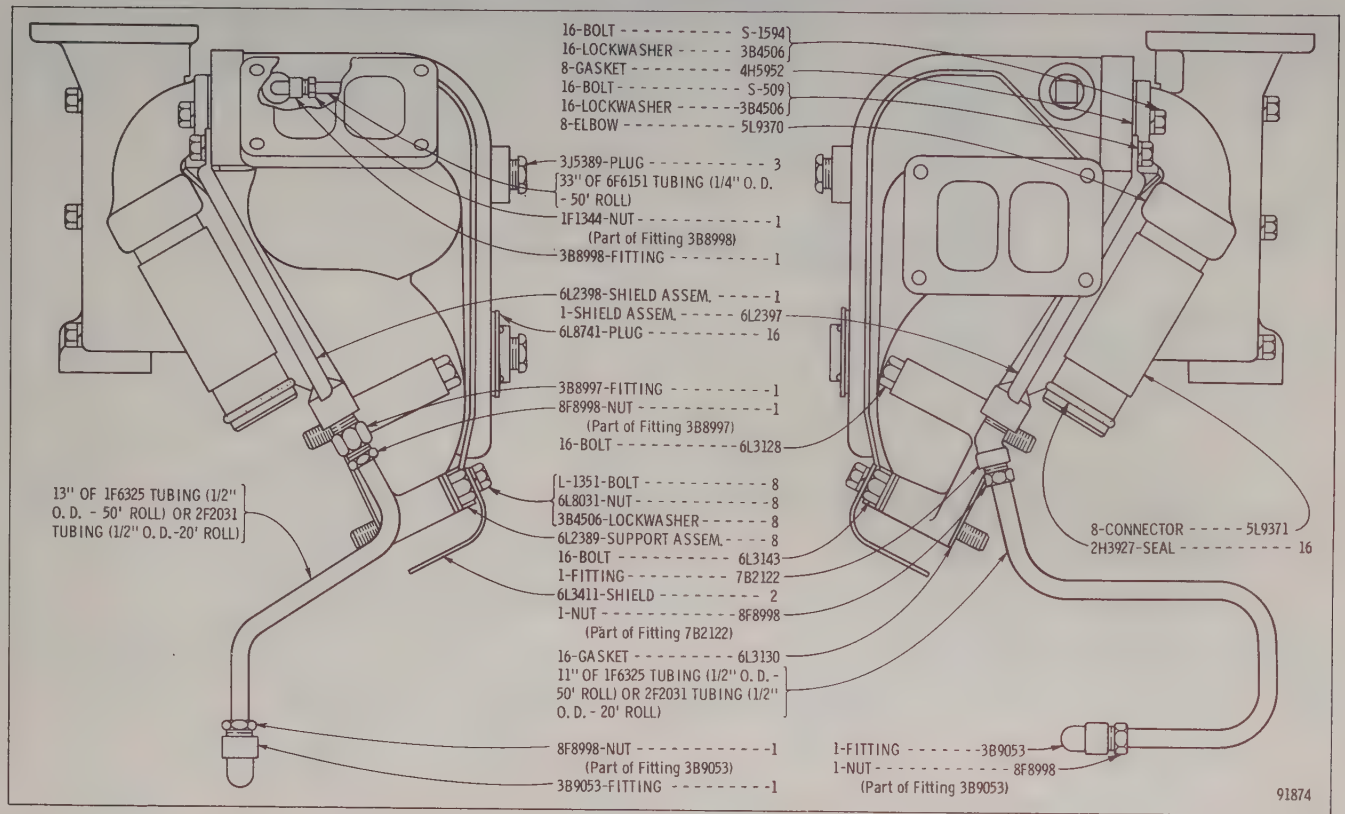

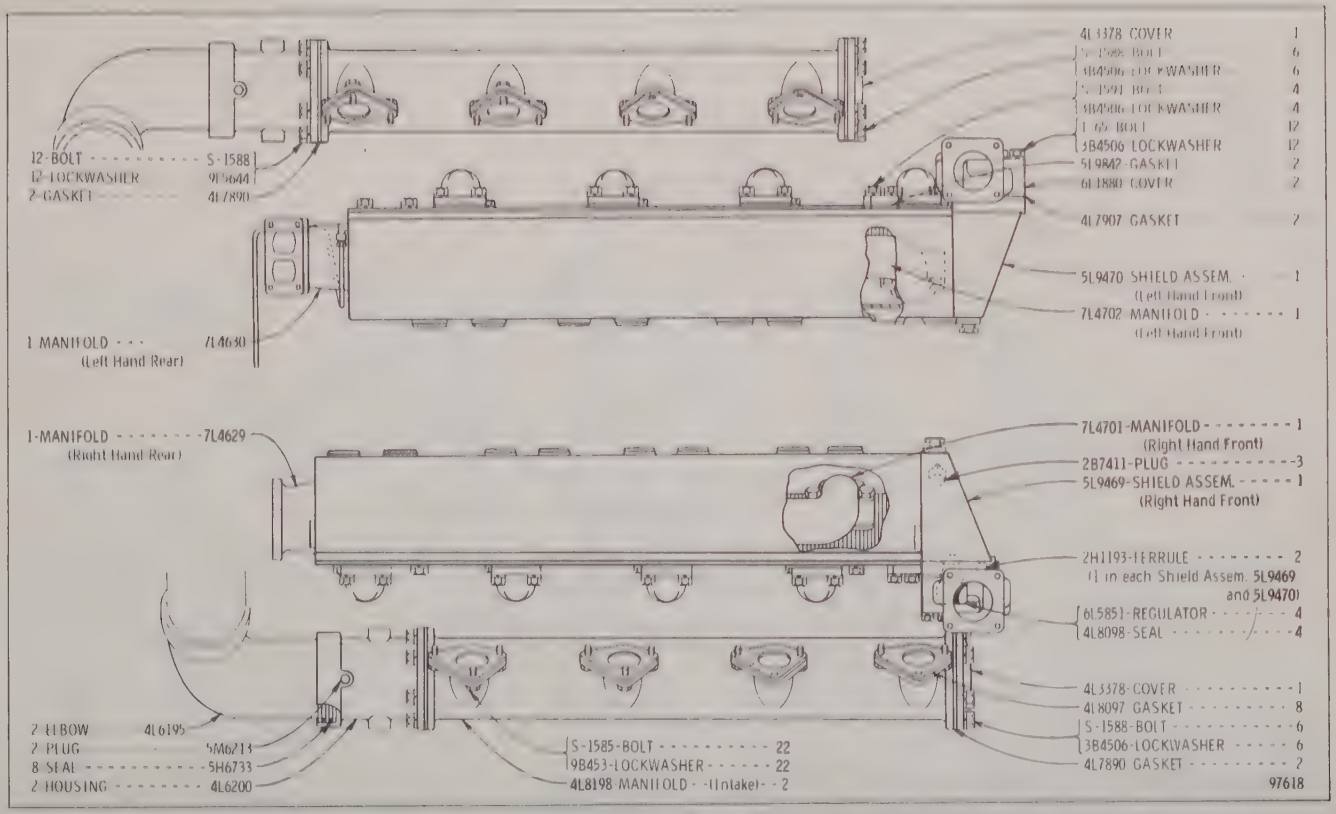

MANIFOLDS--PART 1

SERIAL NO. 76B130 TO 76B144 INCLUSIVE. PART OF 6L4985 & 5L7143 ARRANGEMENTS LISTED ON PAGE 5

REFER ALSO TO PAGES 151 THROUGH 153 FOR SPECIAL PARTS

MANIFOLDS--PART 2

SERIAL NO. 76B130 TO 76B144 INCLUSIVE. PART OF 6L4985 & 5L7143 ARRANGEMENTS LISTED ON PAGE 5

REFER ALSO TO PAGES 151 THROUGH 153 FOR SPECIAL PARTS

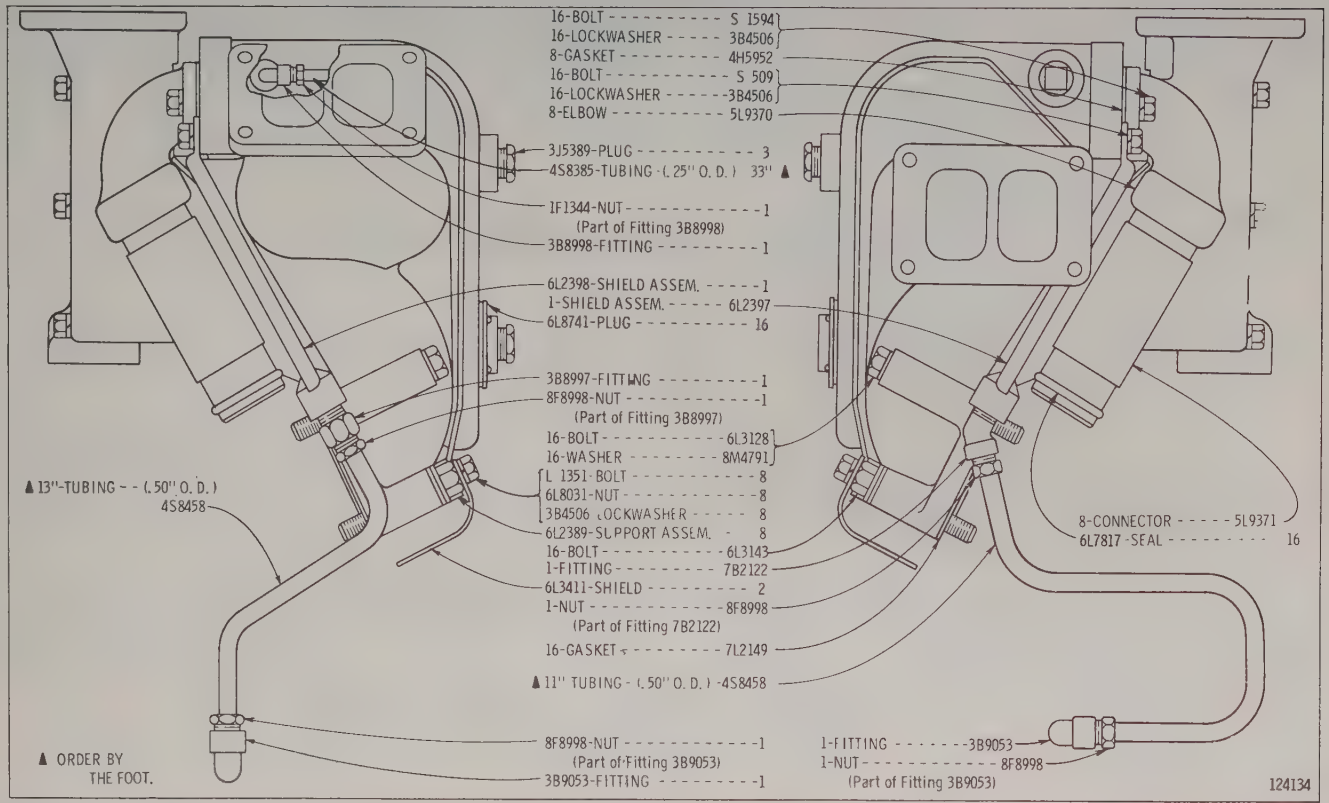

PROPERTY OF U. S. GOVT.

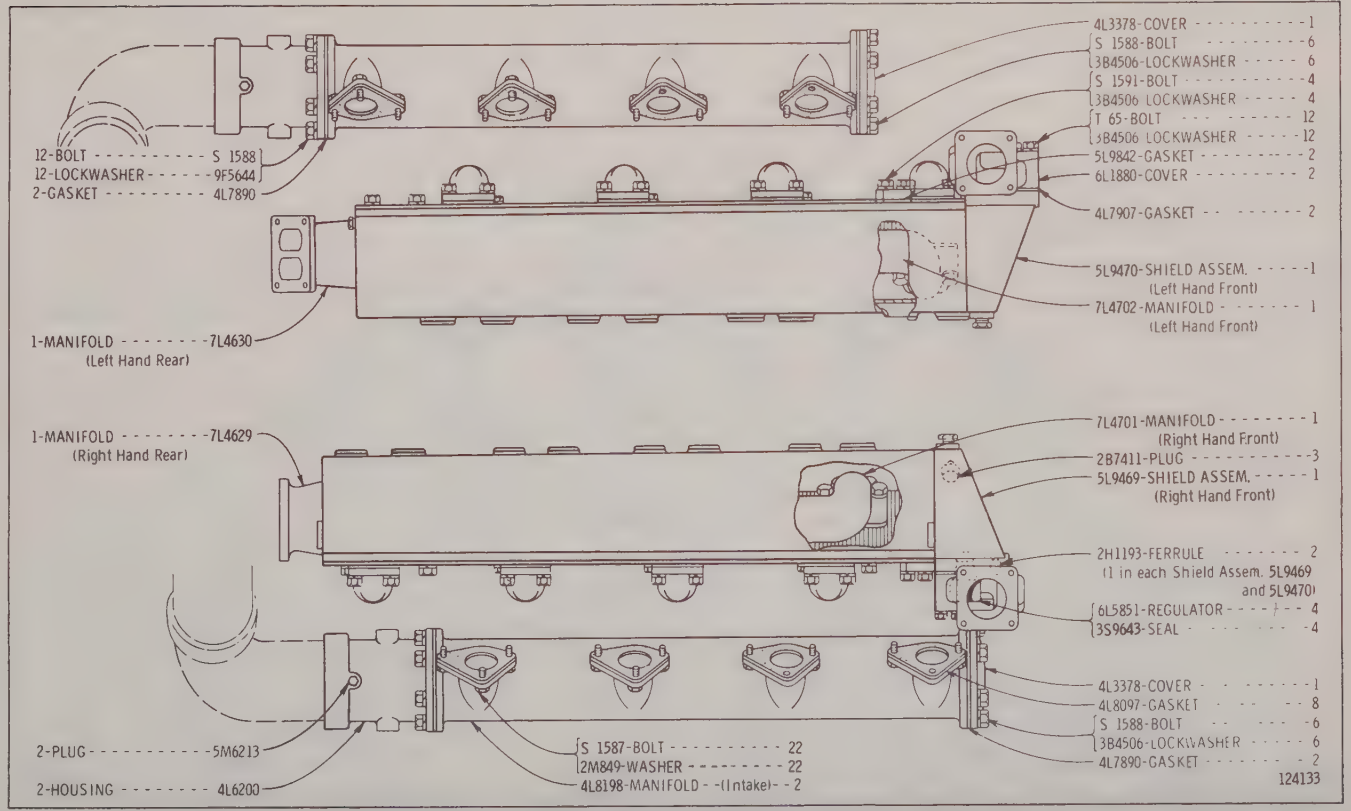

MANIFOLDS—Part 1
Effective with Serial No. 76B145
Part of 6L4985 & 5L7143 Arrangements listed on Page 5. Refer also to Pages 151 through 153 for special parts

MANIFOLDS--PART 2

EFFECTIVE WITH SERIAL No. 76B145. PART OF 6L4985 & 5L7143 ARRANGEMENTS LISTED ON PAGE 5
REFER ALSO TO PAGES 151 THROUGH 153 FOR SPECIAL PARTS

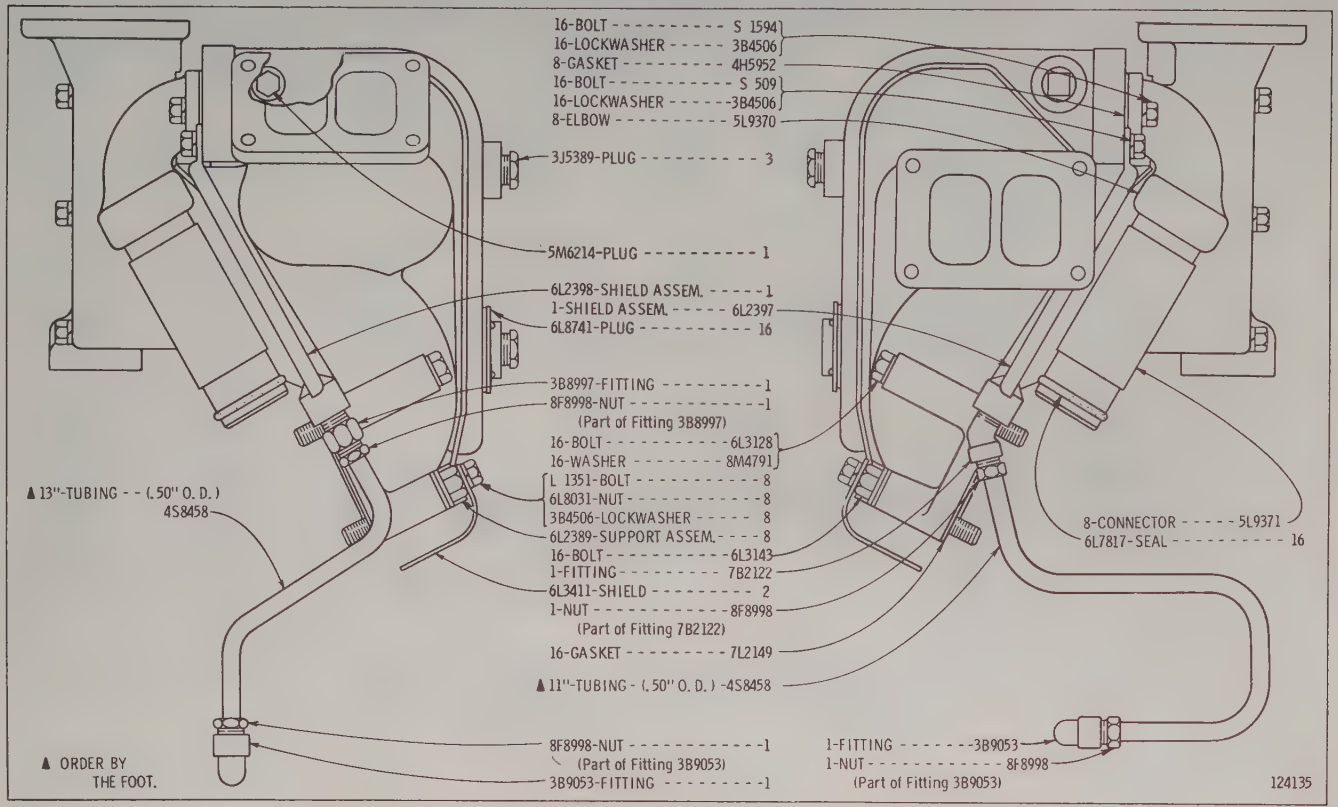

PROPERTY OF U. S. GOV'T

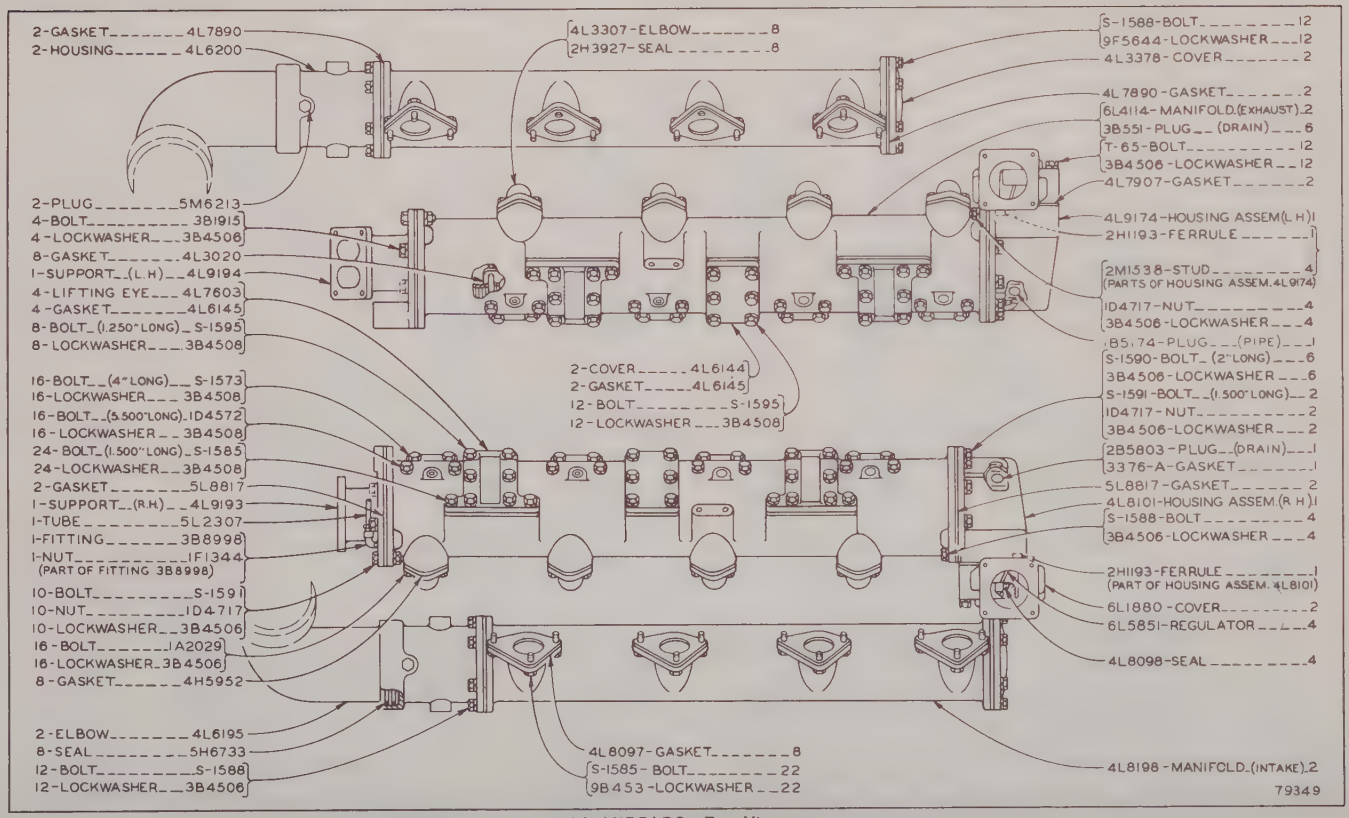

MANIFOLDS—Top View

Serial No. 68B675 to 68B710 and 68B713 to 68B716 inclusive

PART OF 4L1129 S.A.E. STANDARD, 5L2736 AND 5L7143 S.A.E. OPPOSITE STANDARD ROTATION TURBOCHARGED ENGINE ARRANGEMENTS

Refer also to Pages 151 through 153 for special parts

MANIFOLDS—Top View

Serial No. 68B711, 68B712, 68B717 to 68B863 and 68B889 inclusive

PART OF 4L1129 S.A.E. STANDARD, 5L2736 AND 5L7143 S.A.E. OPPOSITE STANDARD ROTATION TURBOCHARGED ENGINE ARRANGEMENTS

Refer also to Pages 151 through 153 for special parts

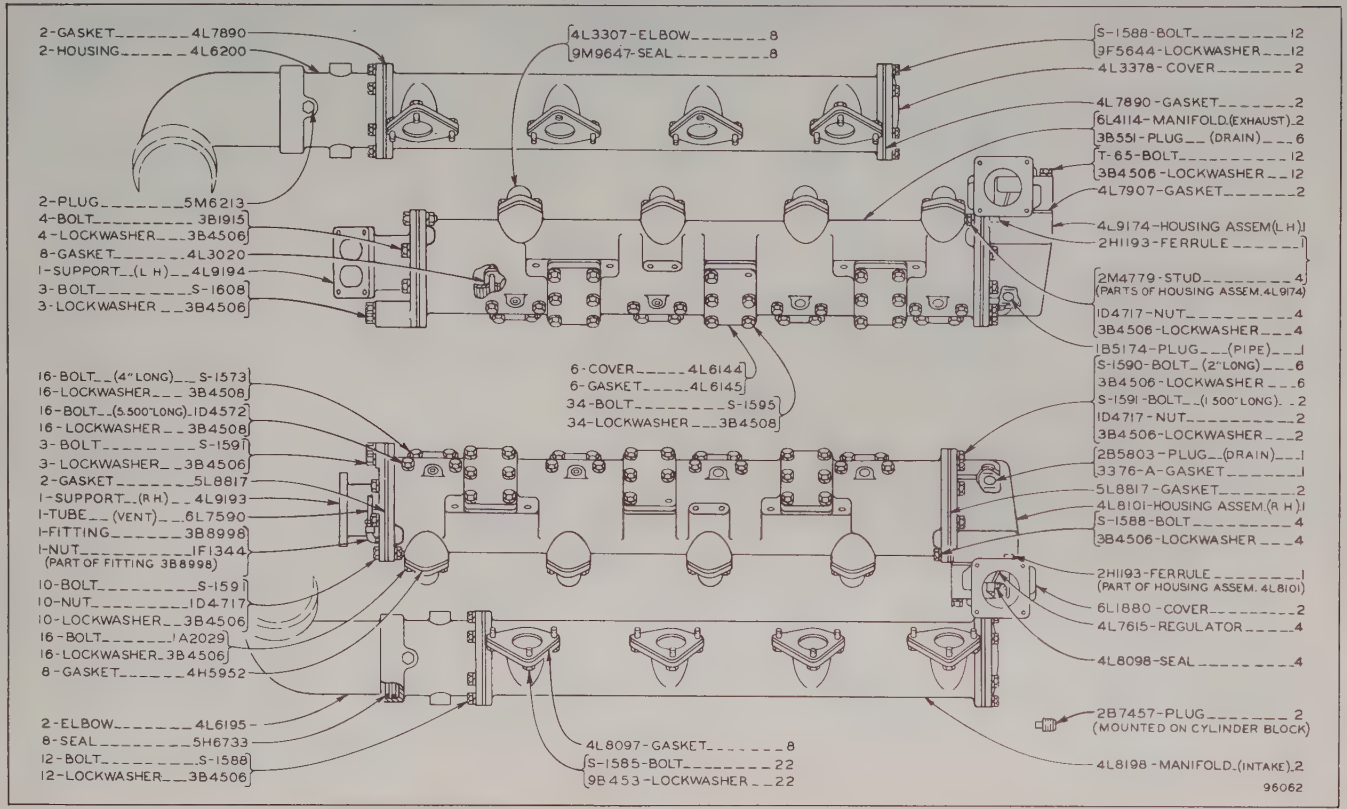

PROPERTY OF

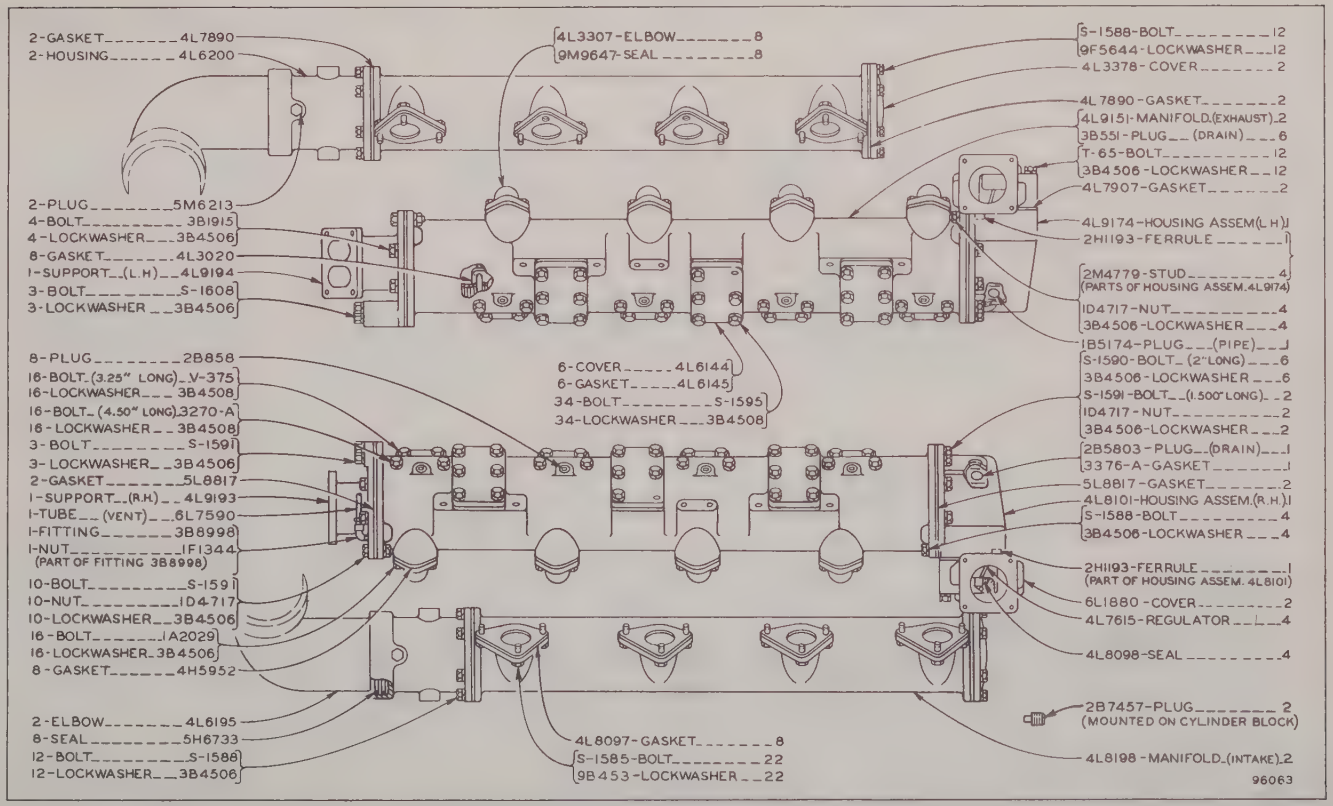

MANIFOLDS--TOP VIEW

SERIAL NO. 68B864 TO 68B888 AND 68B890 TO 68B1063 INCLUSIVE
PART OF 4L1129, 5L2736 AND 5L7143 ARRANGEMENTS LISTED ON PAGE 5
REFER ALSO TO PAGES 151 THROUGH 153 FOR SPECIAL PARTS

MANIFOLDS--Top View

EFFECTIVE WITH SERIAL No. 68B1064. PART OF 4L1129, 5L2736 & 5L7143 ARRANGEMENTS LISTED ON PAGE 5

REFER ALSO TO PAGES 151 THROUGH 153 FOR SPECIAL PARTS

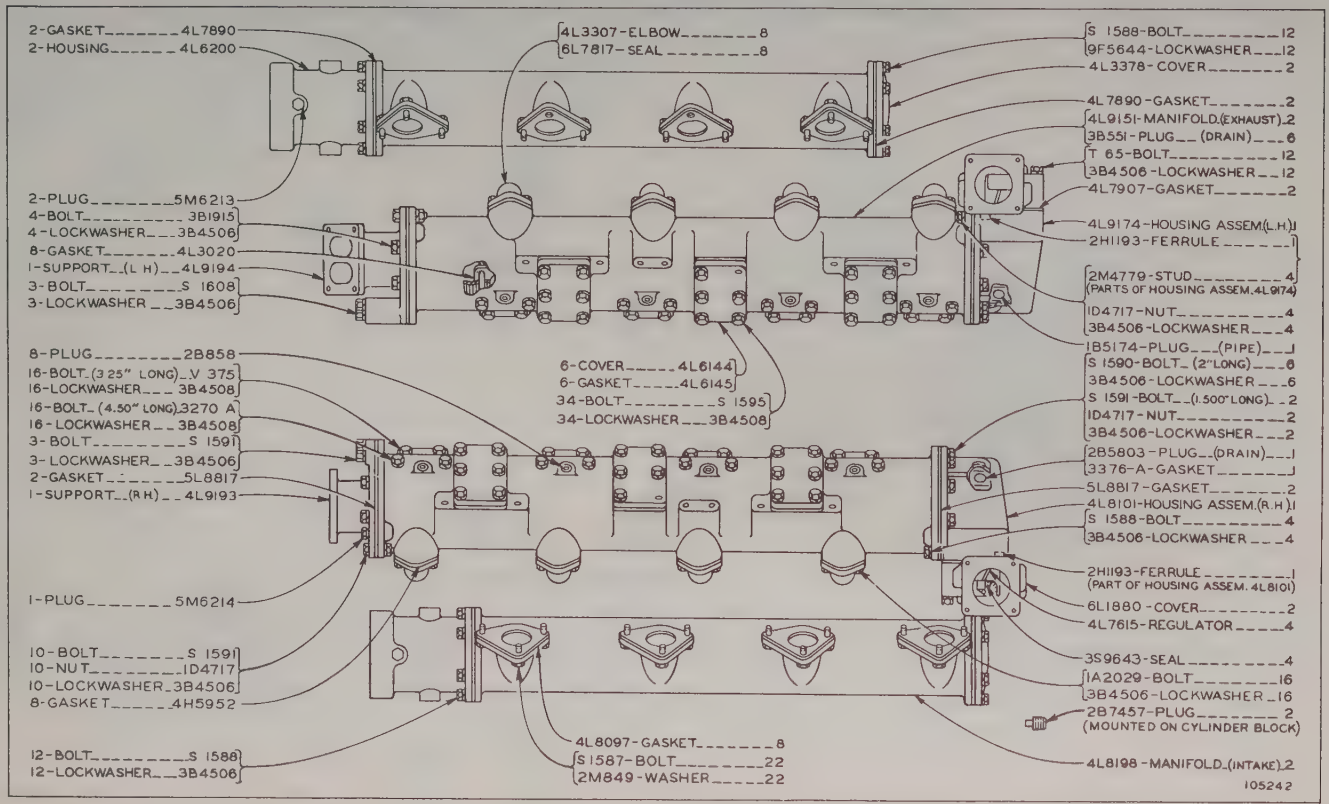

PROPERTY OF U. S. GOV'T

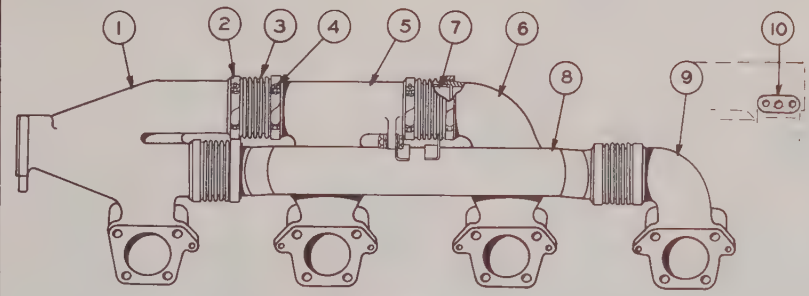

RIGHT HAND BANK

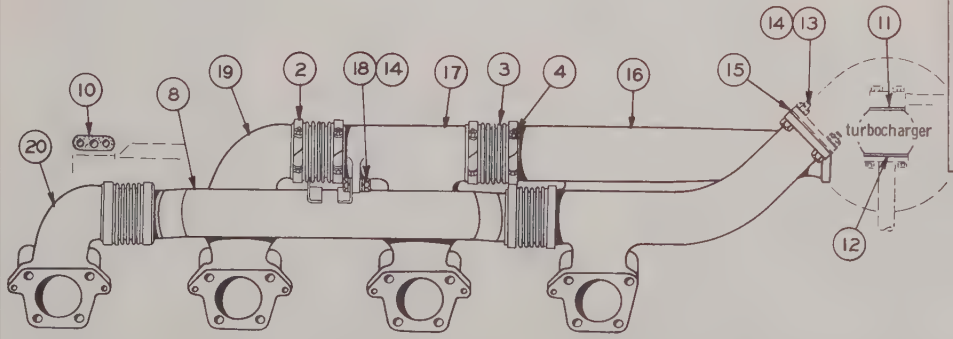

LEFT HAND BANK

REF. NO.	PART NUMBER	DESCRIPTION	QTY
1	2N235	MANIFOLD---(Right Hand Rear)----	1
2	6L8886	CLAMP ASSEM.	16
3	7L8055	BELLOWS	8
4	7L4236	BOLT	16
	7L8170	NUT	16
5	2N239	MANIFOLD---(Right Hand Upper)---	1
6	2N237	MANIFOLD(Right Hand Upper Front)	1
7	6L8881	TUBE	4
8	2N265	TUBE ASSEM.	2
9	2N241	MANIFOLD(Right Hand Lower Front)	1
10	5L9842	GASKET	4
11	1S6595	GASKET	2
12	1S4810	GASKET	2
13	7L3195	BOLT	8
14	8M2296	NUT	10
15	1S4295	GASKET	2
16	2N236	MANIFOLD----(Left Hand Rear)----	1
17	2N240	MANIFOLD----(Left Hand Upper)----	1
18	3H6622	BOLT	2
	3B4506	LOCKWASHER	2
	4B4278	WASHER	4
19	2N238	MANIFOLD-(Left Hand Upper Front)-	1
20	2N242	MANIFOLD-(Left Hand Lower Front)-	1

125196

2N267 EXHAUST MANIFOLD GROUP—Field Installation—Side View
Effective with Serial No. 76B1

2N267 EXHAUST MANIFOLD GROUP—Field Installation—End View
Effective with Serial No. 76B1

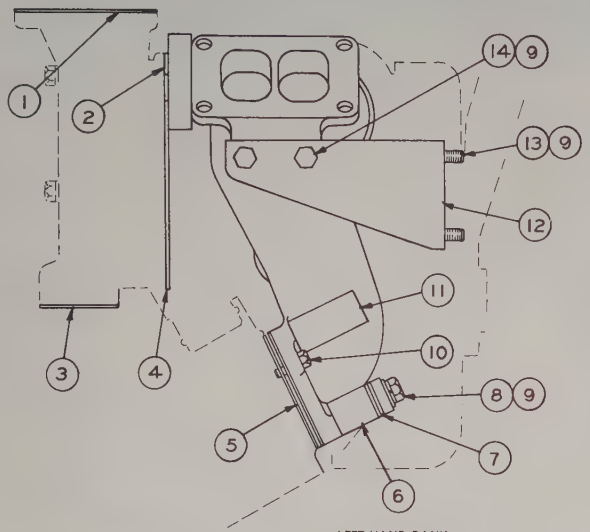

LEFT HAND BANK

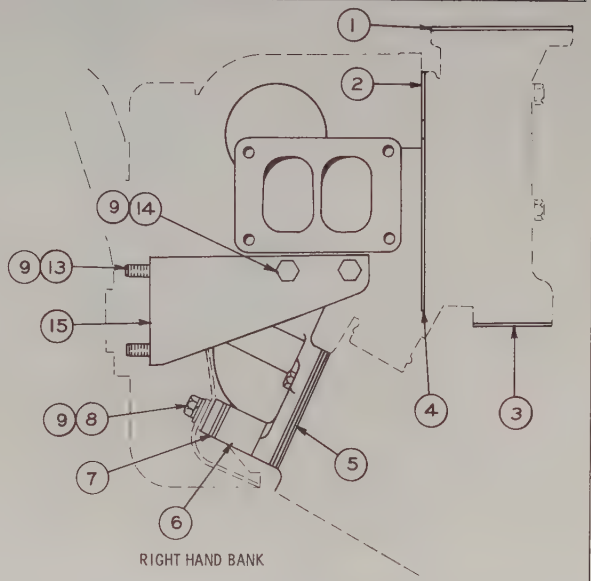

RIGHT HAND BANK

REF. NO.	PART NUMBER	DESCRIPTION	QTY
1	4L8128	GASKET	2
2	4H5952	GASKET	8
3	6L5366	GASKET	2
4	4L7907	GASKET	2
5	7L2149	GASKET	16
6	2N264	SPACER	16

REF. NO.	PART NUMBER	DESCRIPTION	QTY
7	6L2389	SUPPORT ASSEM.	8
8	3H5841	BOLT	8
	6L8031	NUT	8
9	3B4506	LOCKWASHER	16
	4B4278	WASHER	16
10	3H6591	BOLT	13

REF. NO.	PART NUMBER	DESCRIPTION	QTY
11	2N263	SPACER	16
12	7L5330	BRACKET	1
13	T102	BOLT	4
14	S1588	BOLT	4
	1D4717	NUT	4
15	7L5327	BRACKET	1

125197

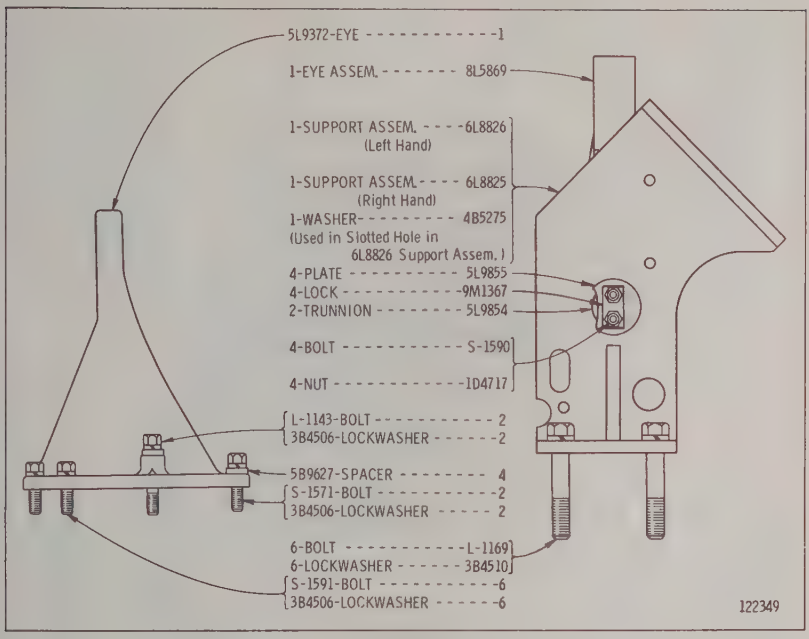

LIFTING EYE
Serial No. 68B711, 712 and 717 to 68B1314 inclusive and 76B88 to 76B349 inclusive

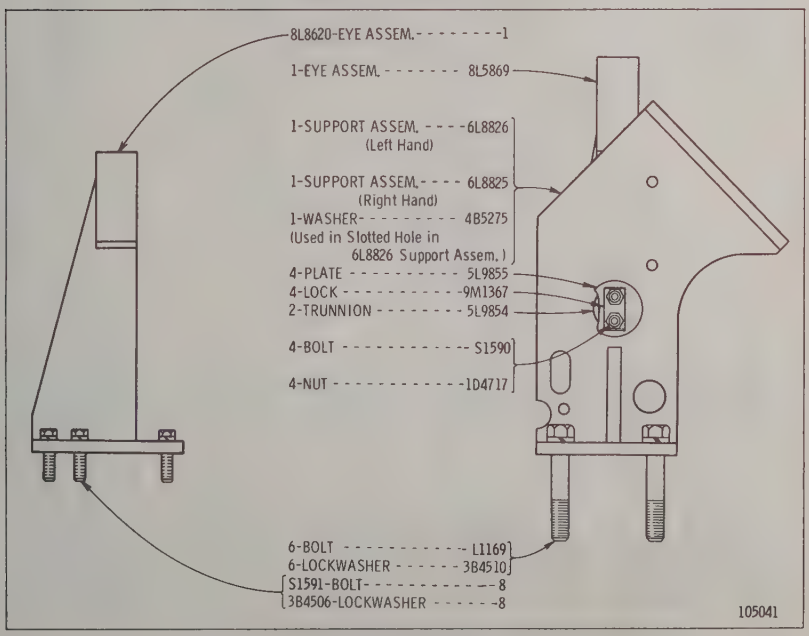

LIFTING EYE
Effective with Serial No. 68B1315-Up and 76B350-Up

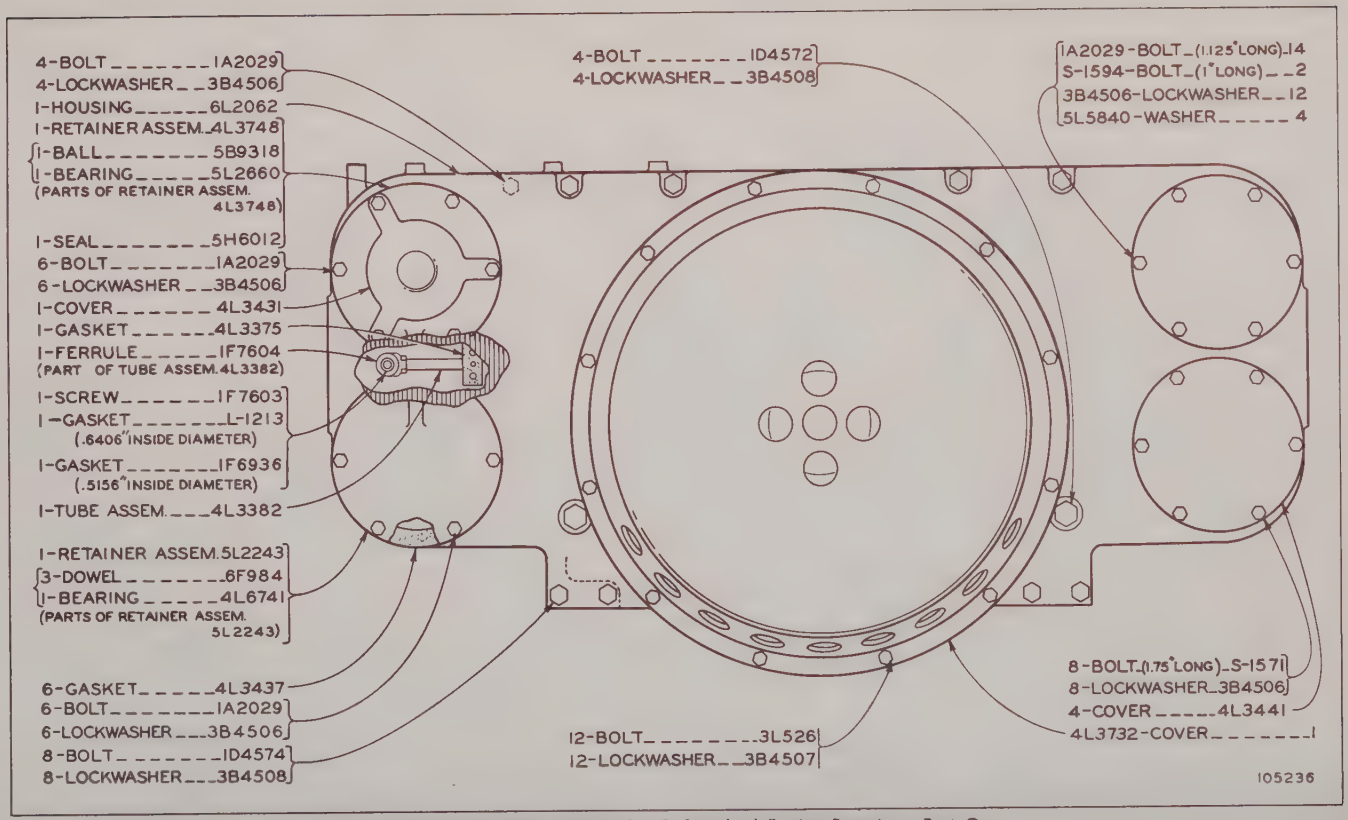

FRONT ACCESSORY DRIVE—S.A.E. Standard Engine Rotation—Part One
PART OF 4L1129 AND 6L4985 TURBOCHARGED ENGINE ARRANGEMENTS
Refer also to Pages 160 and 161 for special parts

FRONT ACCESSORY DRIVE—S.A.E. Standard Engine Rotation—Part Two

PART OF 4L1129 AND 6L4985 TURBOCHARGED ENGINE ARRANGEMENTS

Refer also to Pages 160 and 161 for special parts

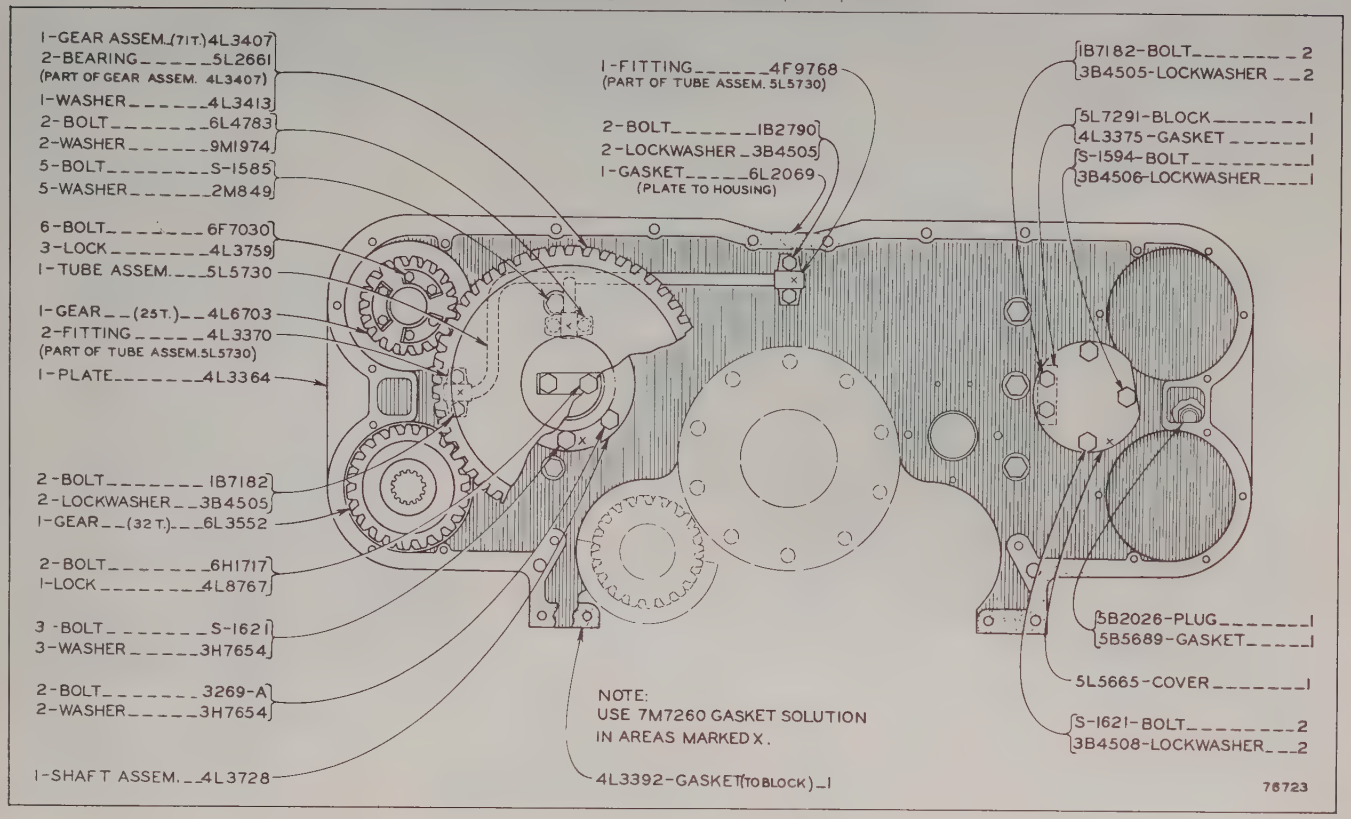

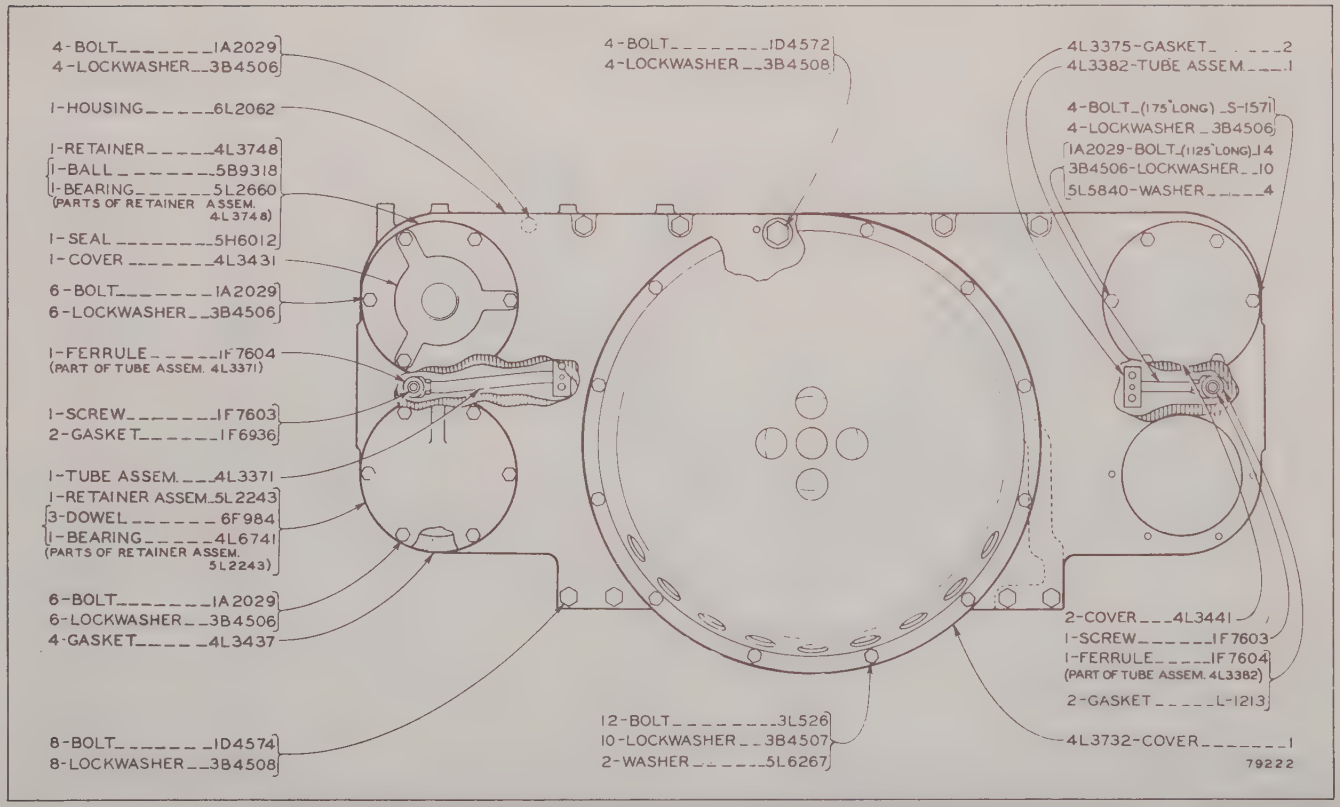

6L7968 FRONT ACCESSORY DRIVE GROUP—S.A.E. Opposite Standard Engine Rotation—Part One
PART OF 5L2736 TURBOCHARGED ENGINE ARRANGEMENT

6L7968 FRONT ACCESSORY DRIVE GROUP—S.A.E. Opposite Standard Engine Rotation—Part Two

PART OF 5L2736 TURBOCHARGED ENGINE ARRANGEMENT

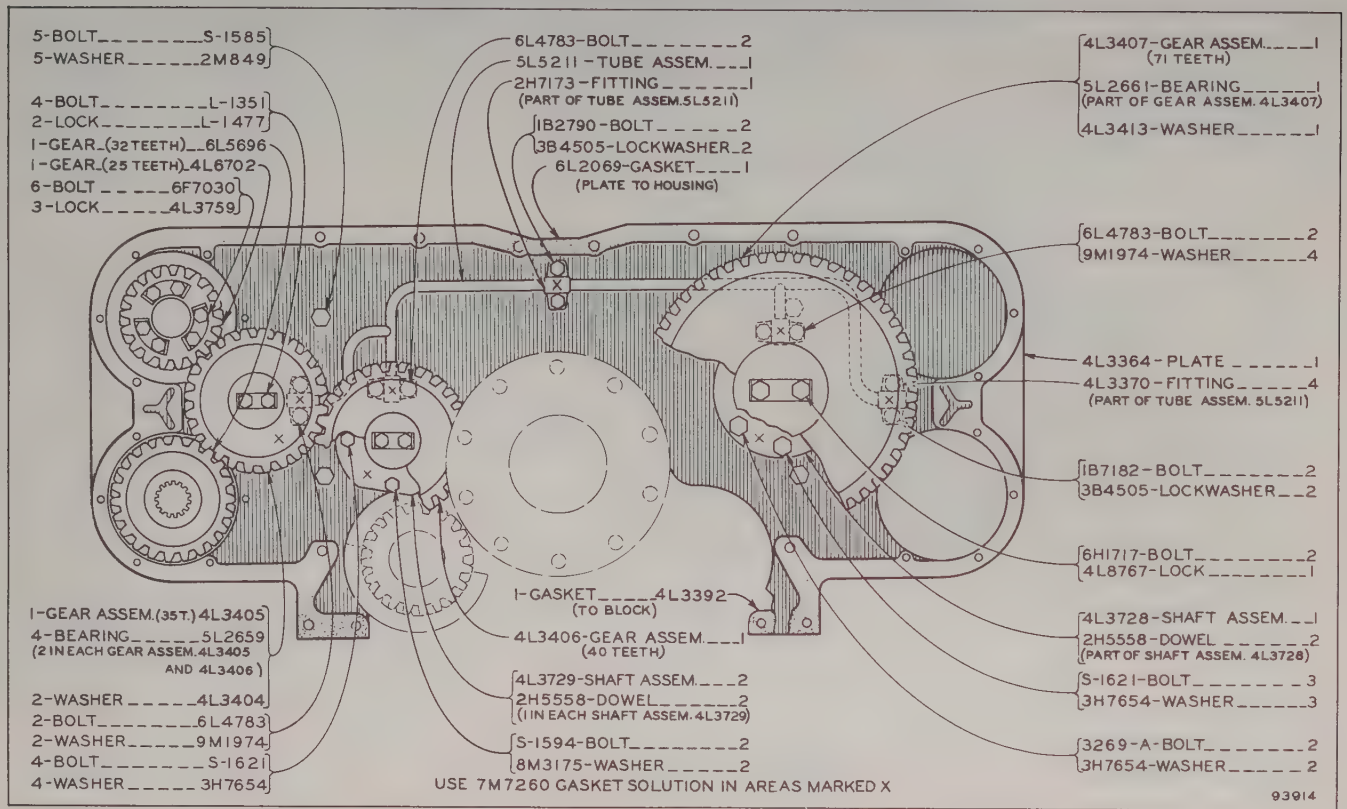

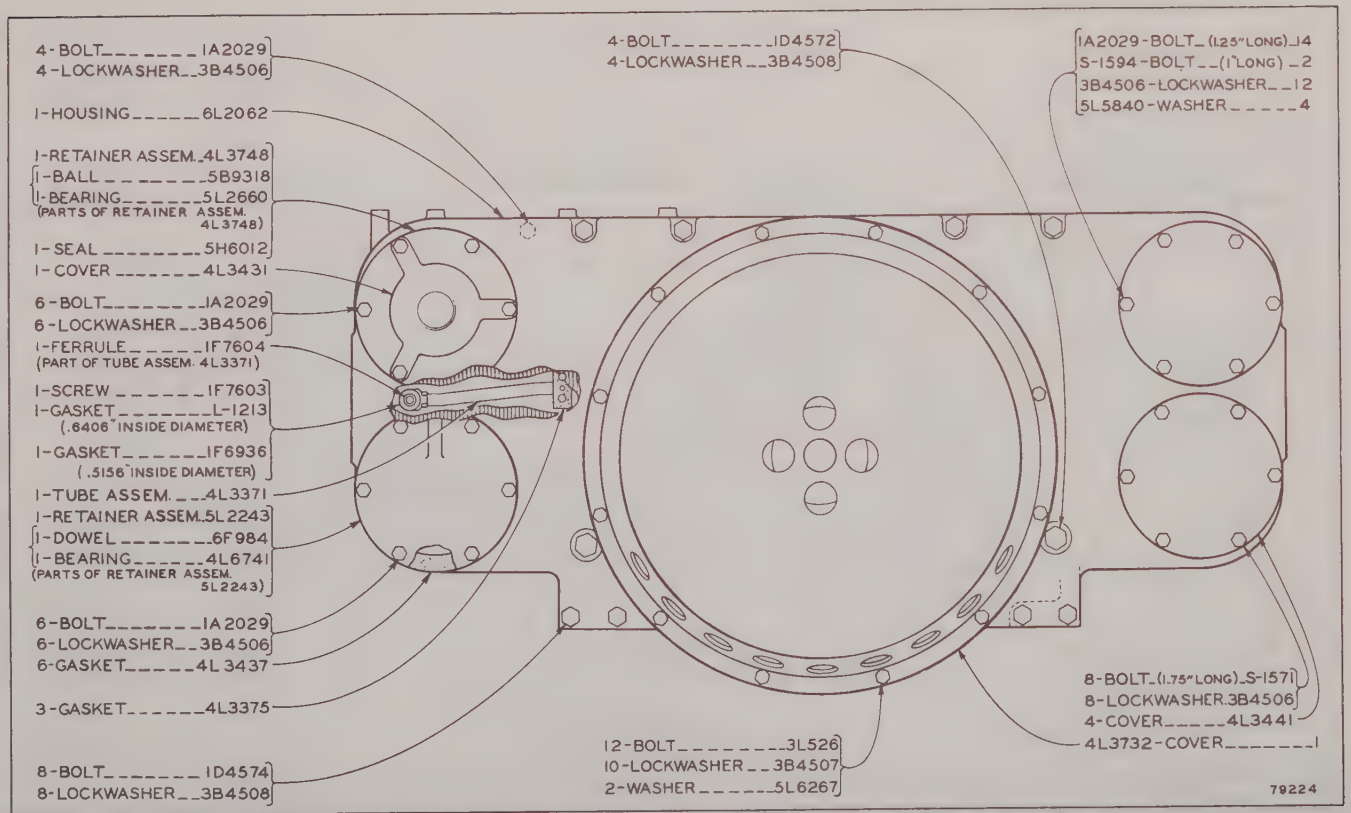

6L7971 FRONT ACCESSORY DRIVE GROUP—S.A.E. Opposite Standard Engine Rotation—Part One
PART OF 5L7143 TURBOCHARGED ENGINE ARRANGEMENT

6L7971 FRONT ACCESSORY DRIVE GROUP—S.A.E. Opposite Standard Engine Rotation—Part Two

PART OF 5L7143 TURBOCHARGED ENGINE ARRANGEMENT

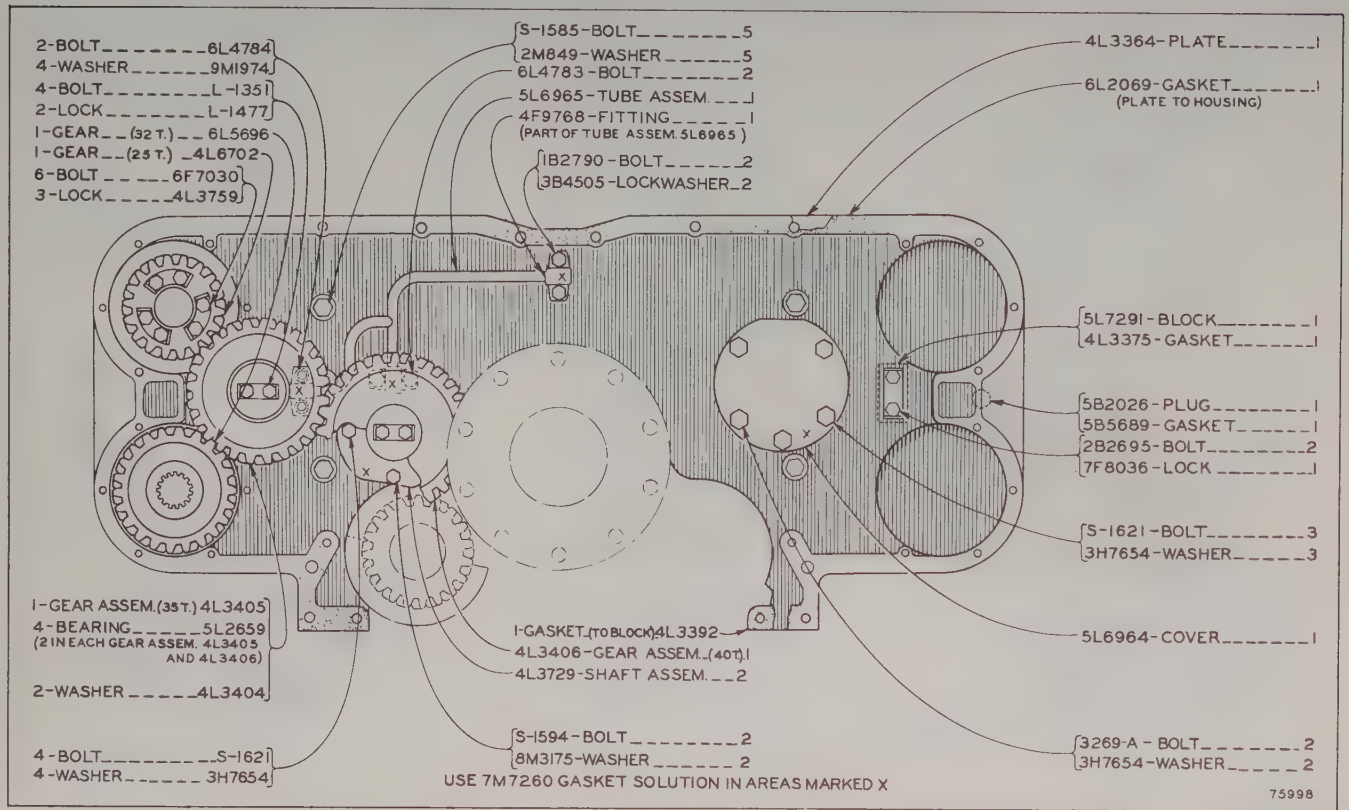

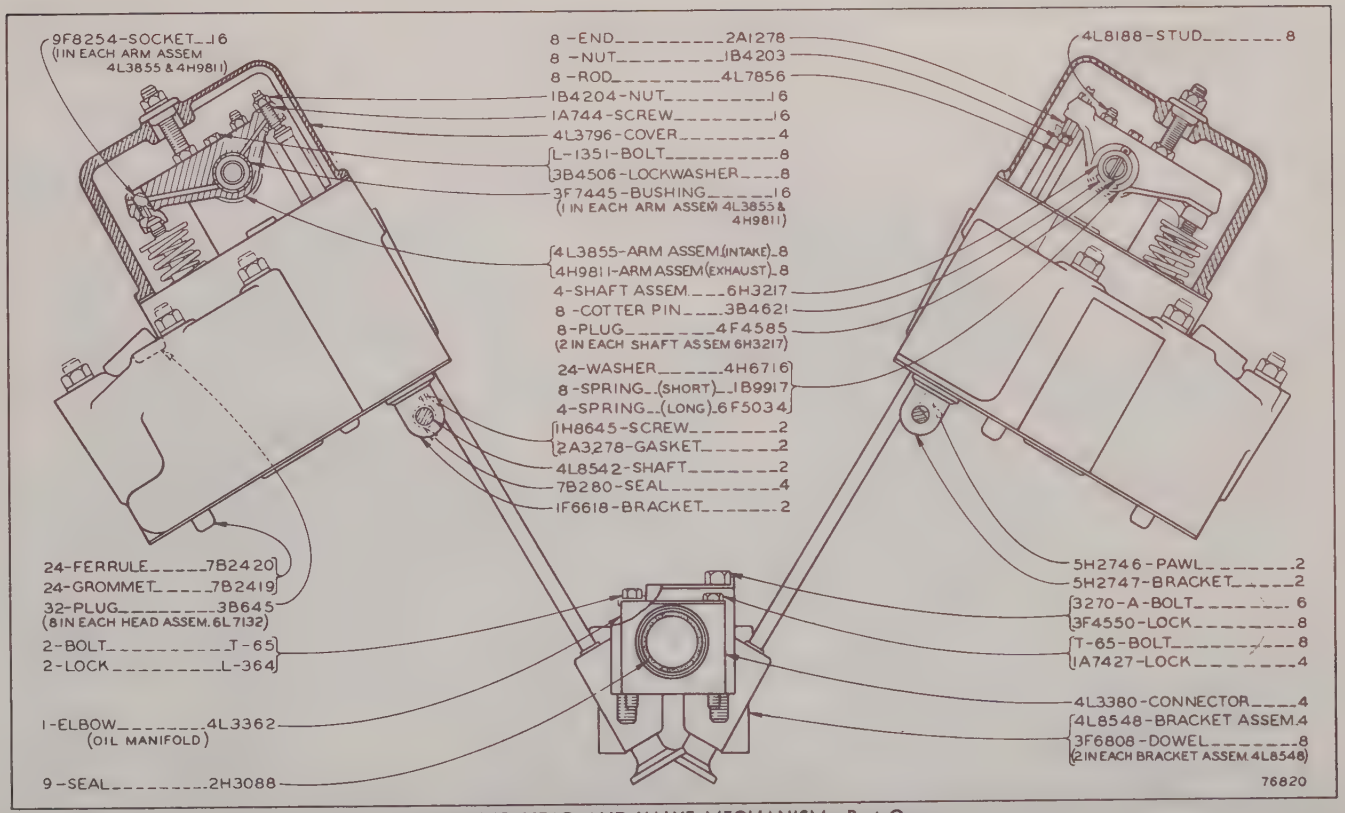

CYLINDER HEAD AND VALVE MECHANISM—Part One
Serial No. 68B675 to 68B785 inclusive and 76B1 to 76B92 inclusive
See Page 51 for Gasket Kits

CYLINDER HEAD AND VALVE MECHANISM—Part Two

Serial No. 68B675 to 68B785 inclusive and 76B1 to 76B92 inclusive

Refer also to Page 115 for special parts

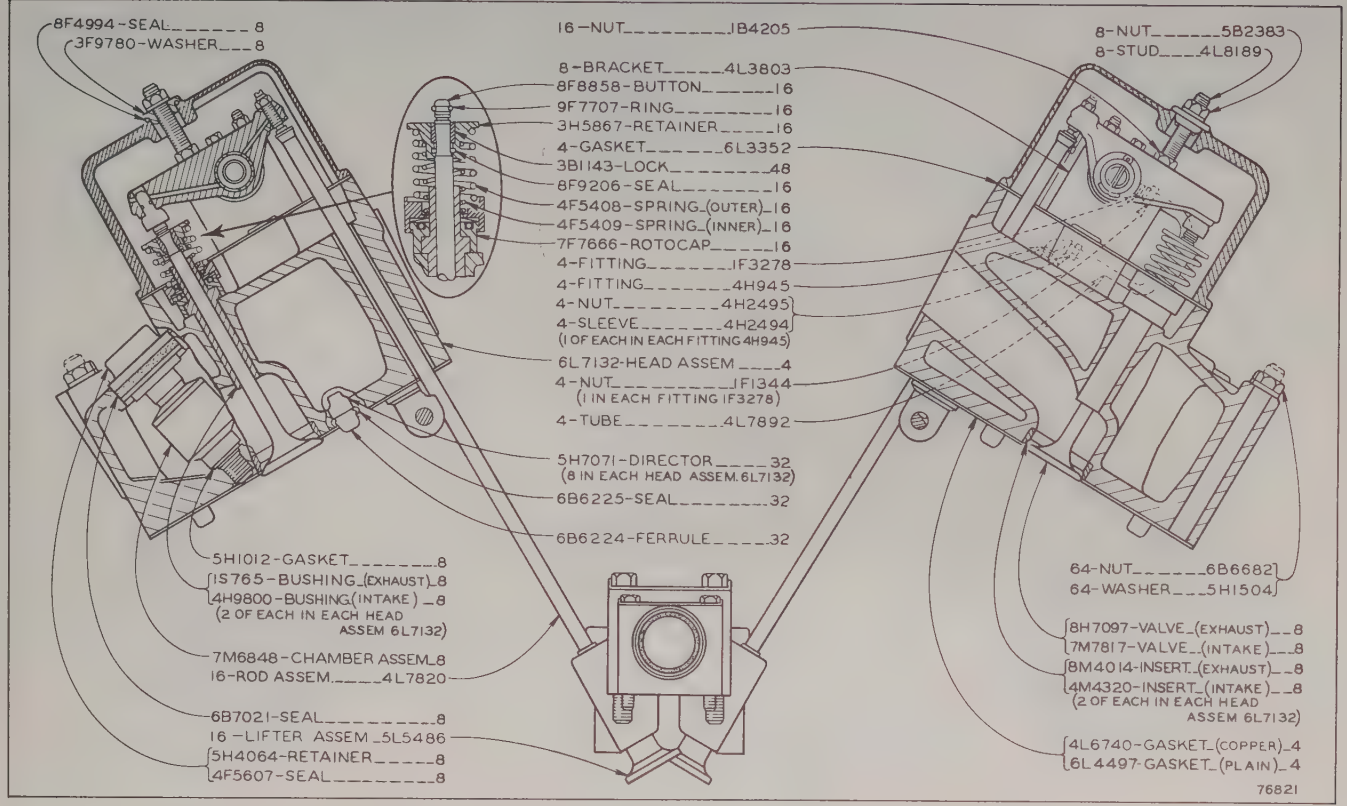

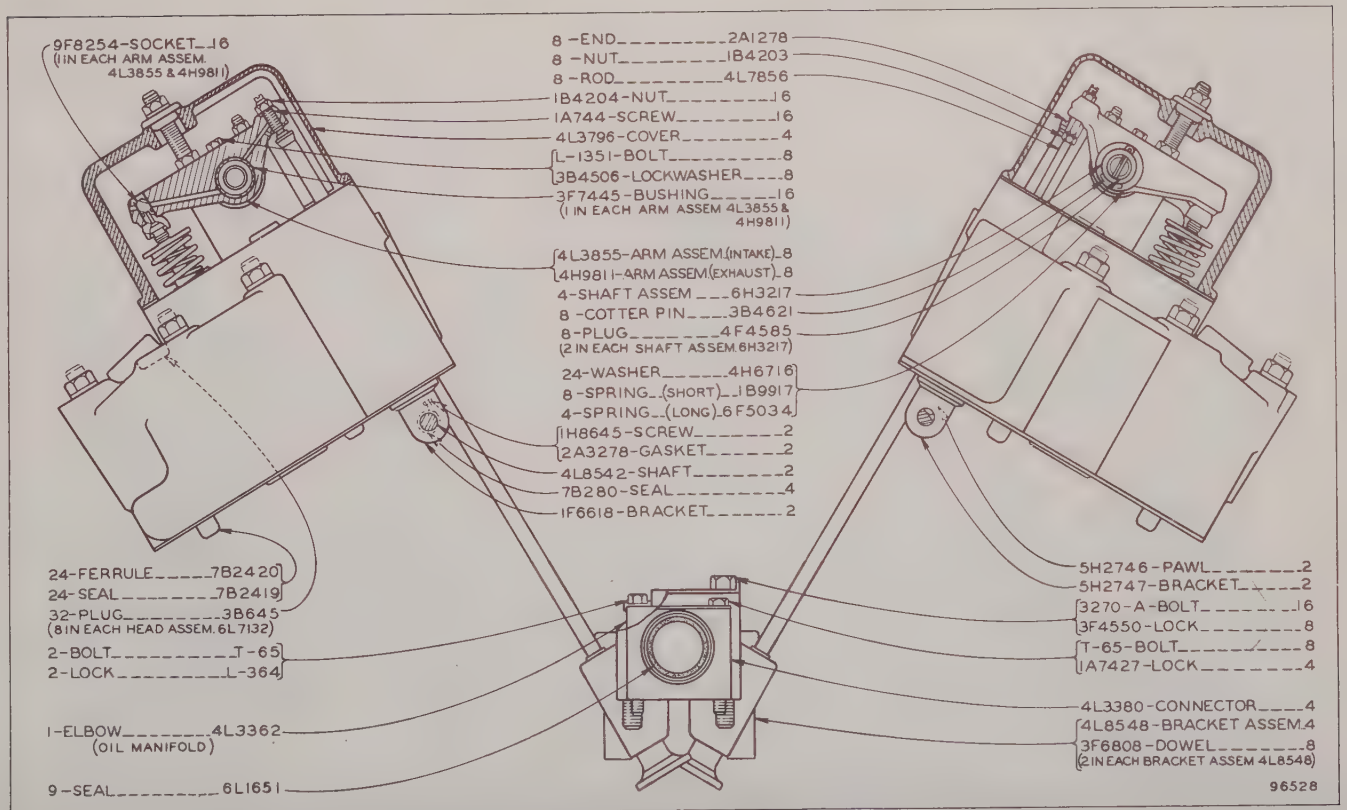

CYLINDER HEAD AND VALVE MECHANISM--PART 1

SERIAL No. 68B786 TO 68B1201 INCLUSIVE AND 76B93 TO 76B204 INCLUSIVE

SEE PAGE 51 FOR GASKET KITS

CYLINDER HEAD AND VALVE MECHANISM--PART 2

SERIAL NO. 68B786 TO 68B1201 INCLUSIVE AND 76B93 TO 76B204 INCLUSIVE

REFER ALSO TO PAGE 115 FOR SPECIAL PARTS

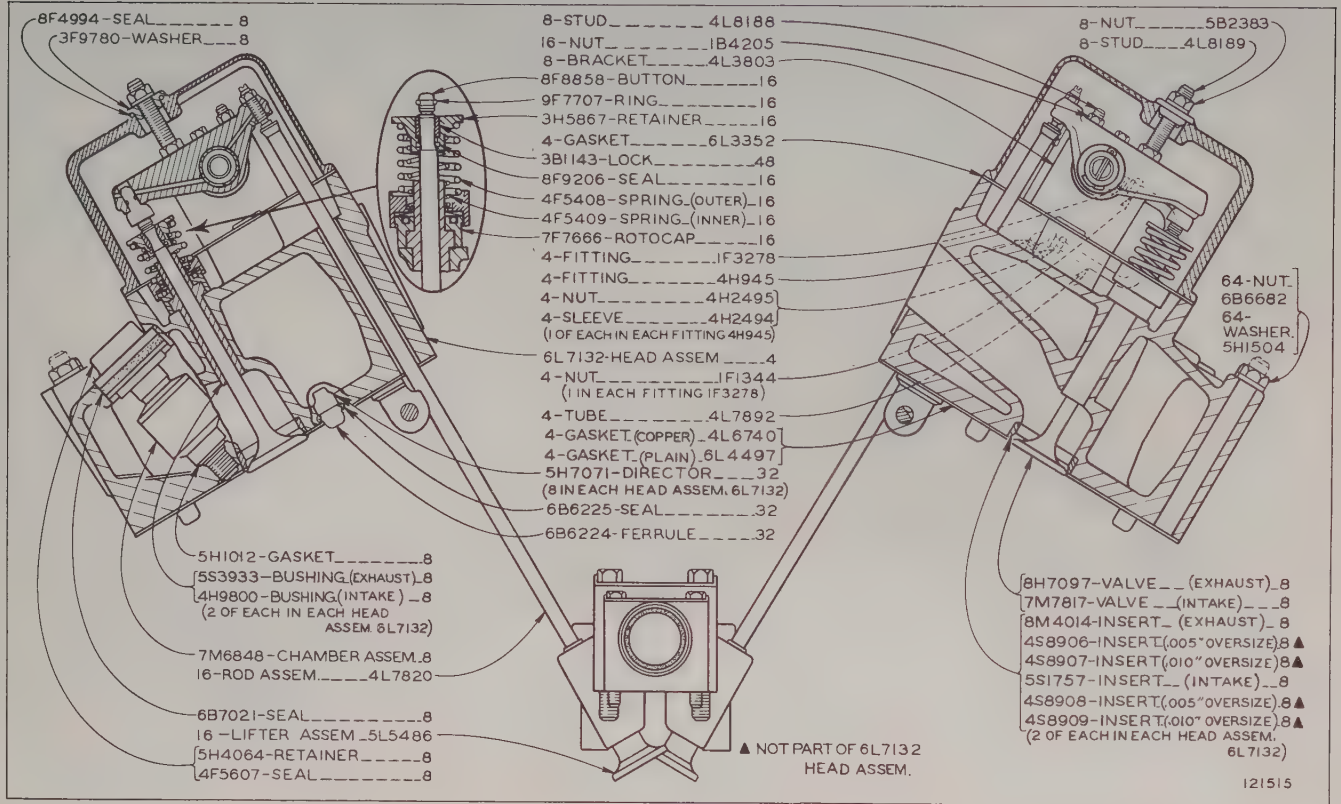

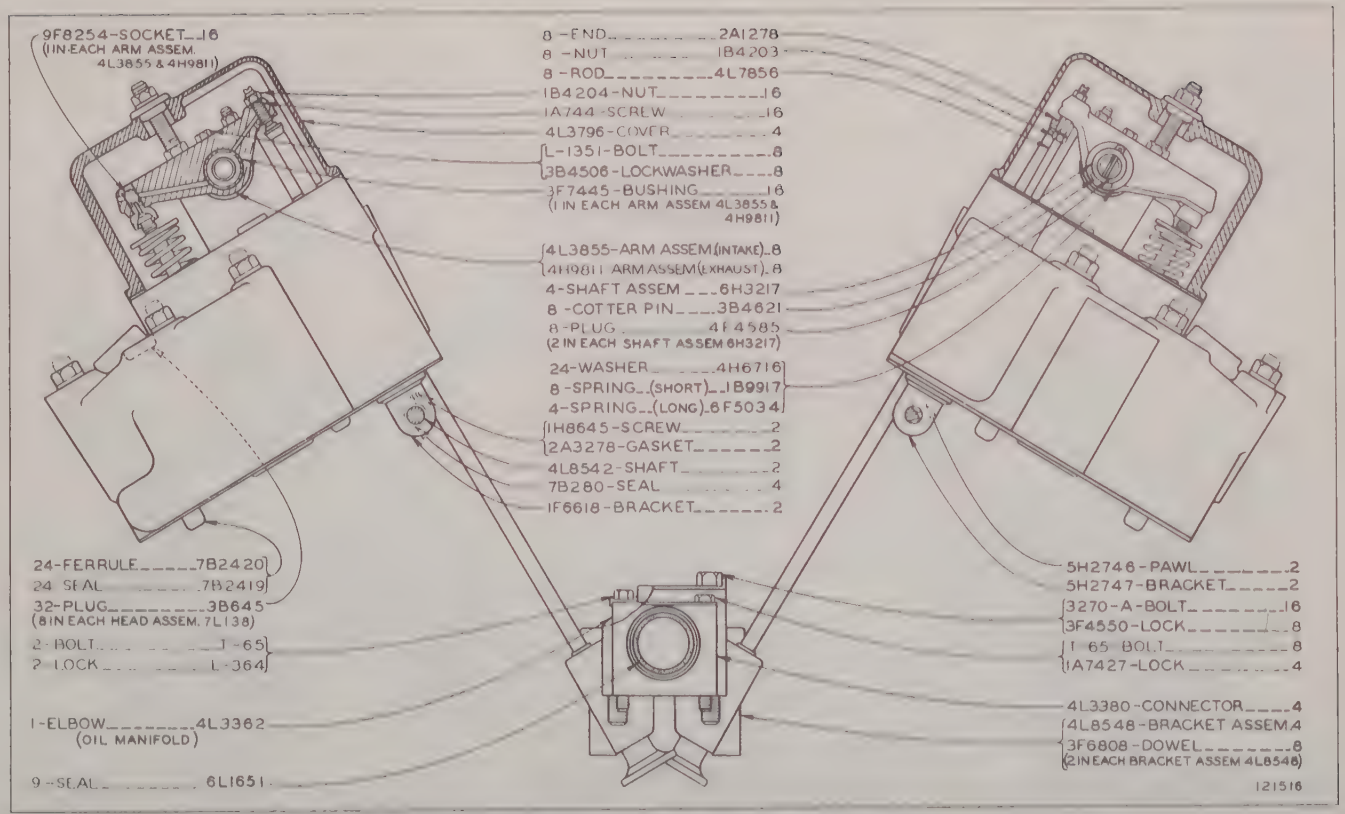

CYLINDER HEAD AND VALVE MECHANISM--PART 1
EFFECTIVE WITH SERIAL No. 68B1202-UP AND 76B205-UP

CYLINDER HEAD AND VALVE MECHANISM--PART 2
EFFECTIVE WITH SERIAL No. 68B1202-UP AND 76B205-UP

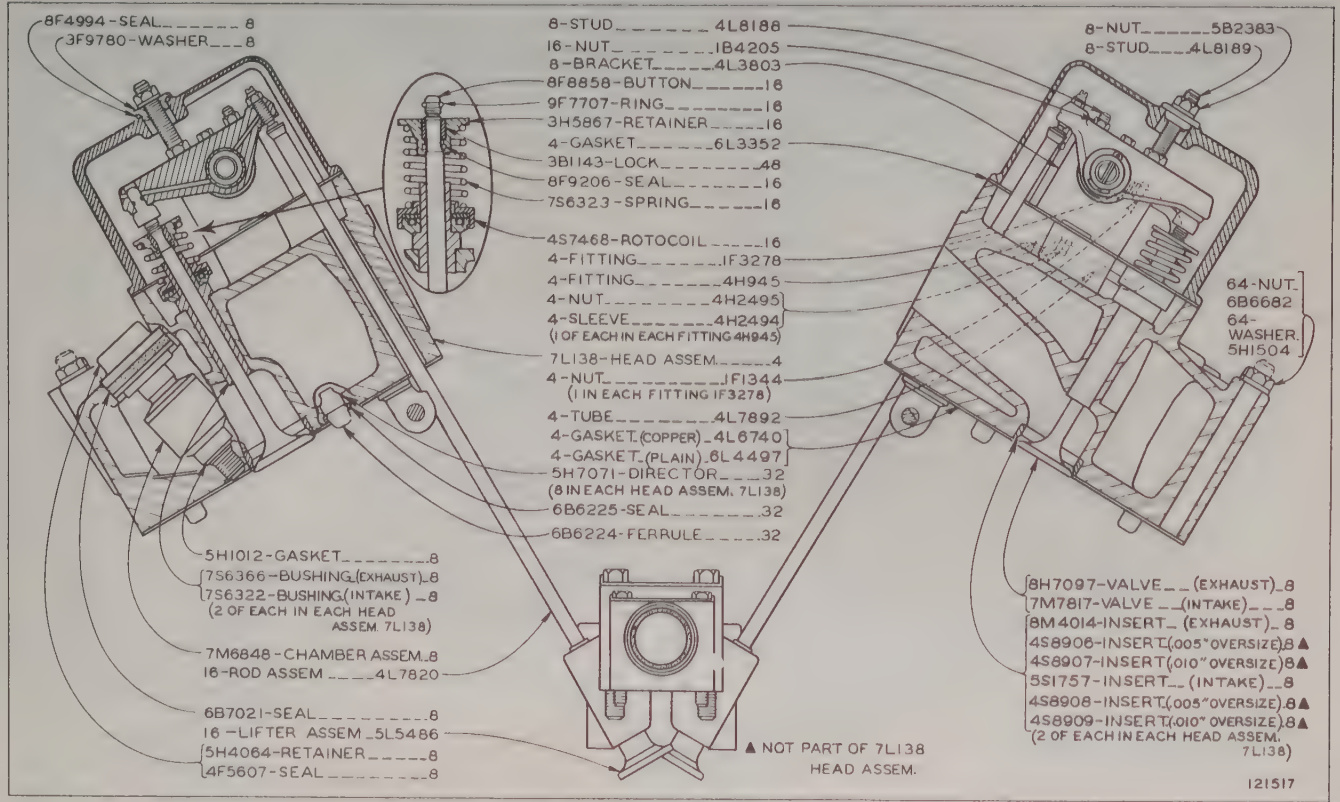

PROPERTY OF

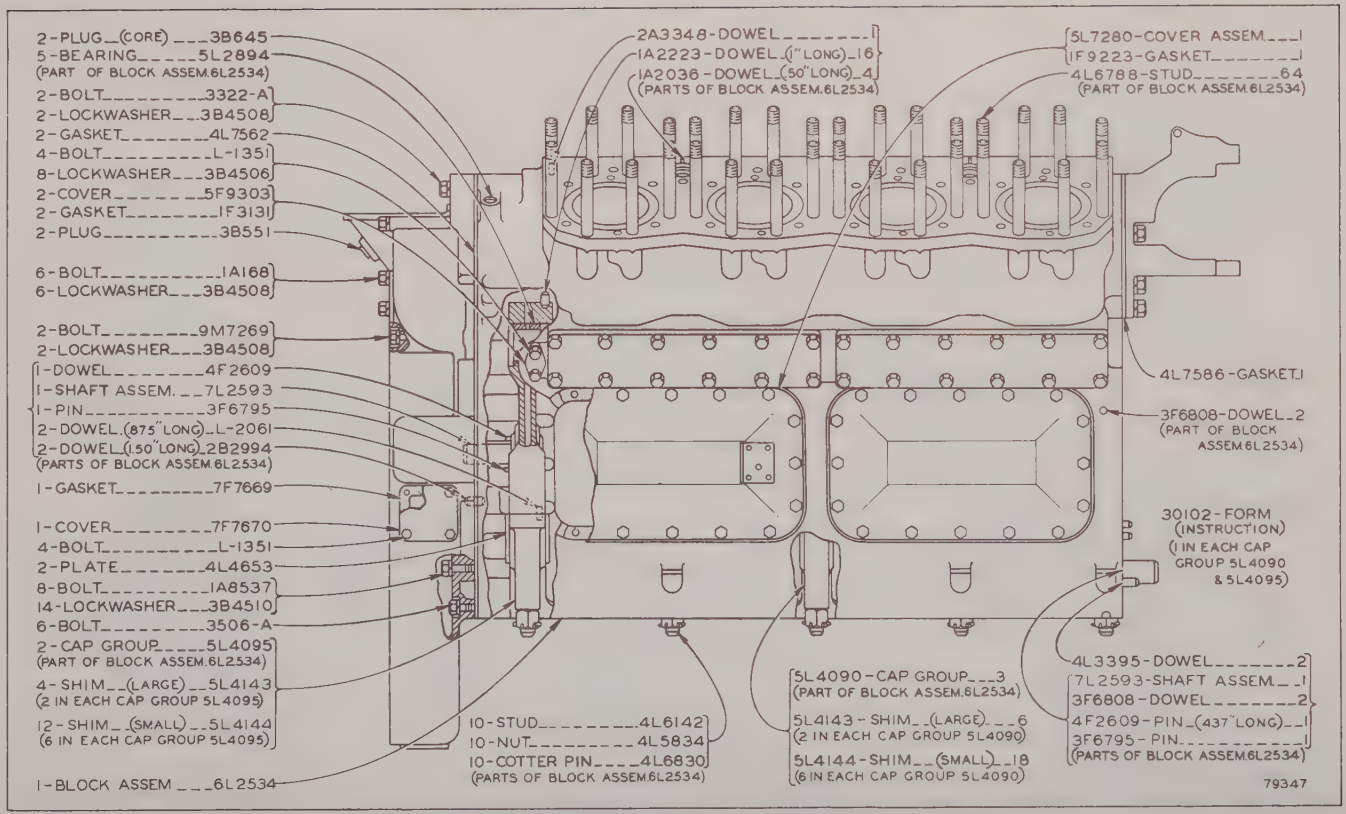

CYLINDER BLOCK AND COVERS—Side View
Serial No. 68B675 to 68B1297 inclusive and 76B1 to 76B331 inclusive
See Page 51 for Gasket Kits

CYLINDER BLOCK AND COVERS—Front View
Serial No. 68B675 to 68B1297 inclusive and 76B1 to 76B331 inclusive
Refer also to Pages 178A & 181 for special parts

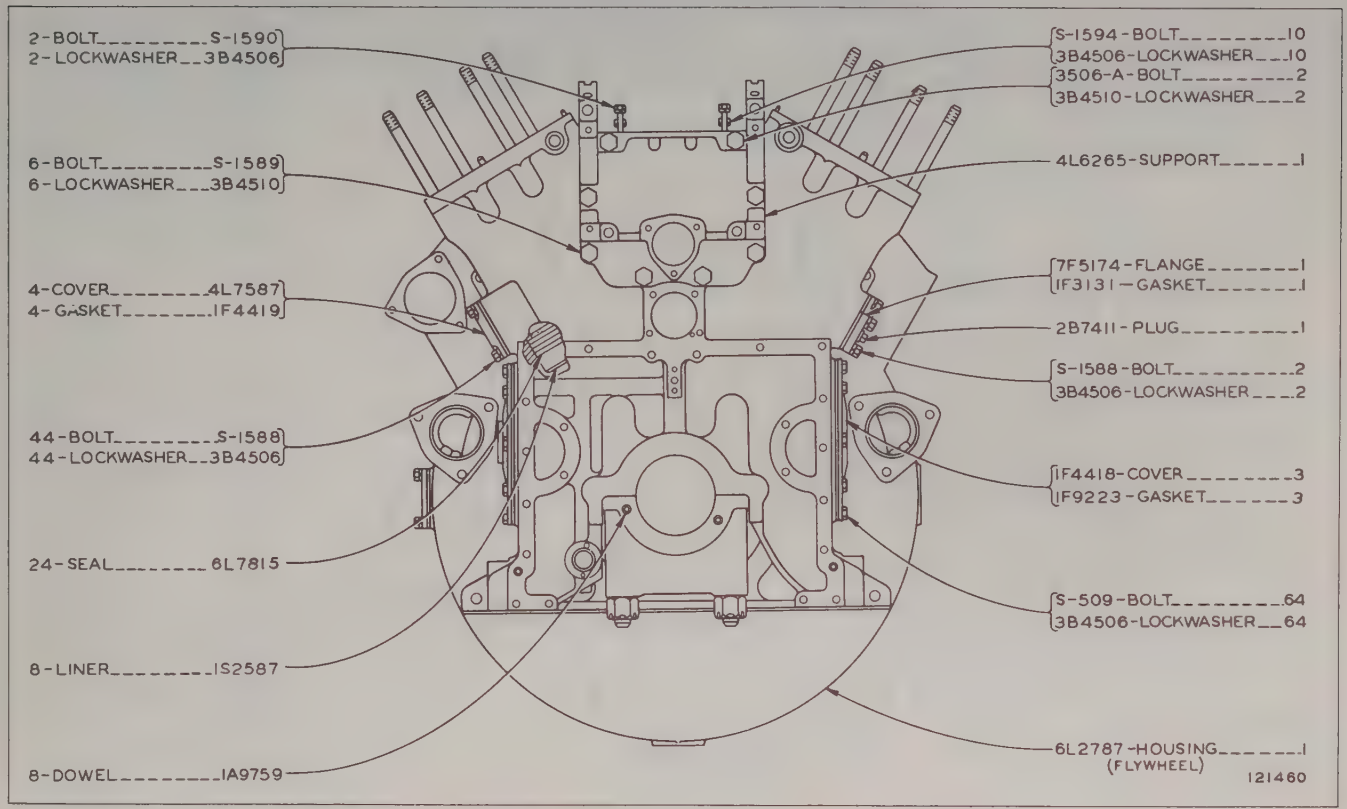

PROPERTY OF U. S. GOVT.

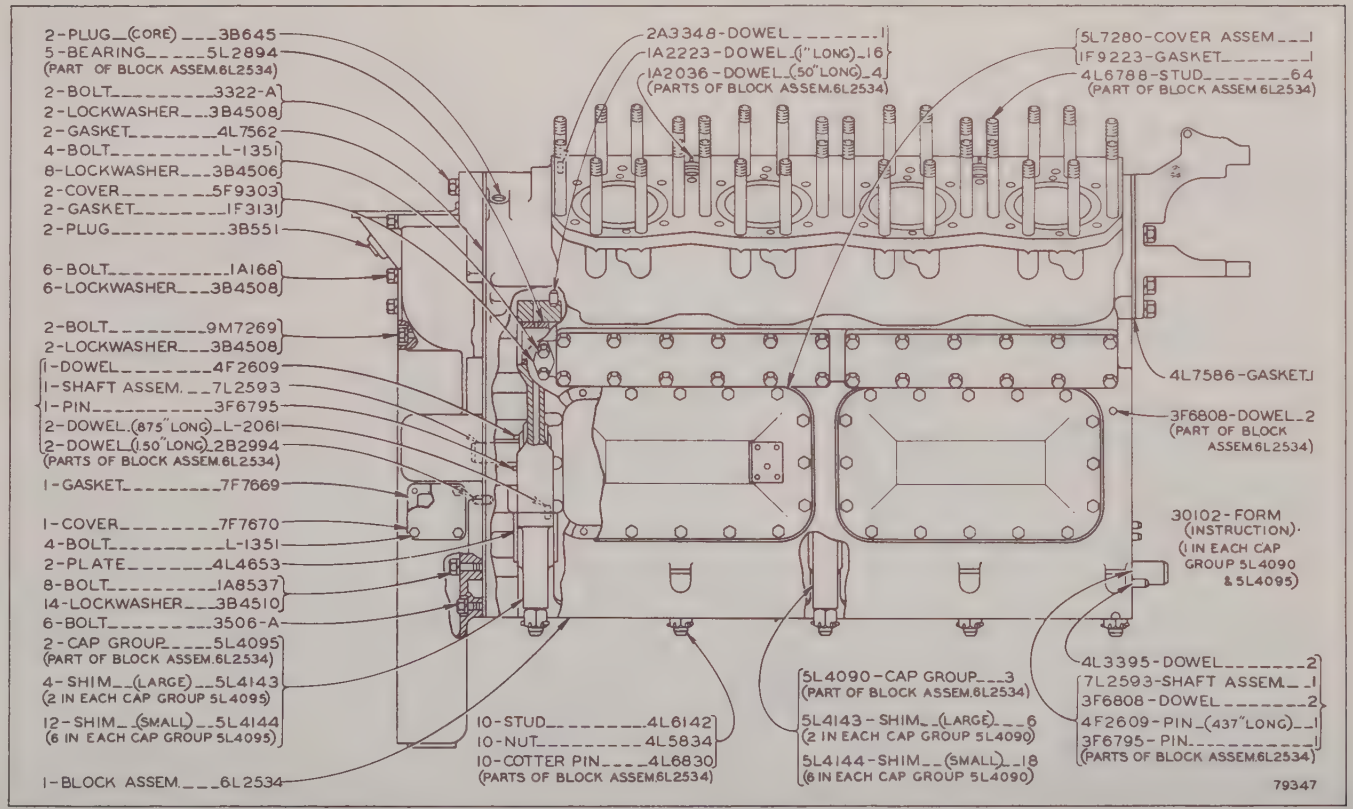

CYLINDER BLOCK AND COVERS—Side View
Effective with Serial No. 68B1298-Up and 76B332-Up
See Page 51 for Gasket Kits

CYLINDER BLOCK AND COVERS—Front View
Effective with Serial No. 68B1298—Up and 76B332—Up
Refer also to Pages 178A and 181 for special parts

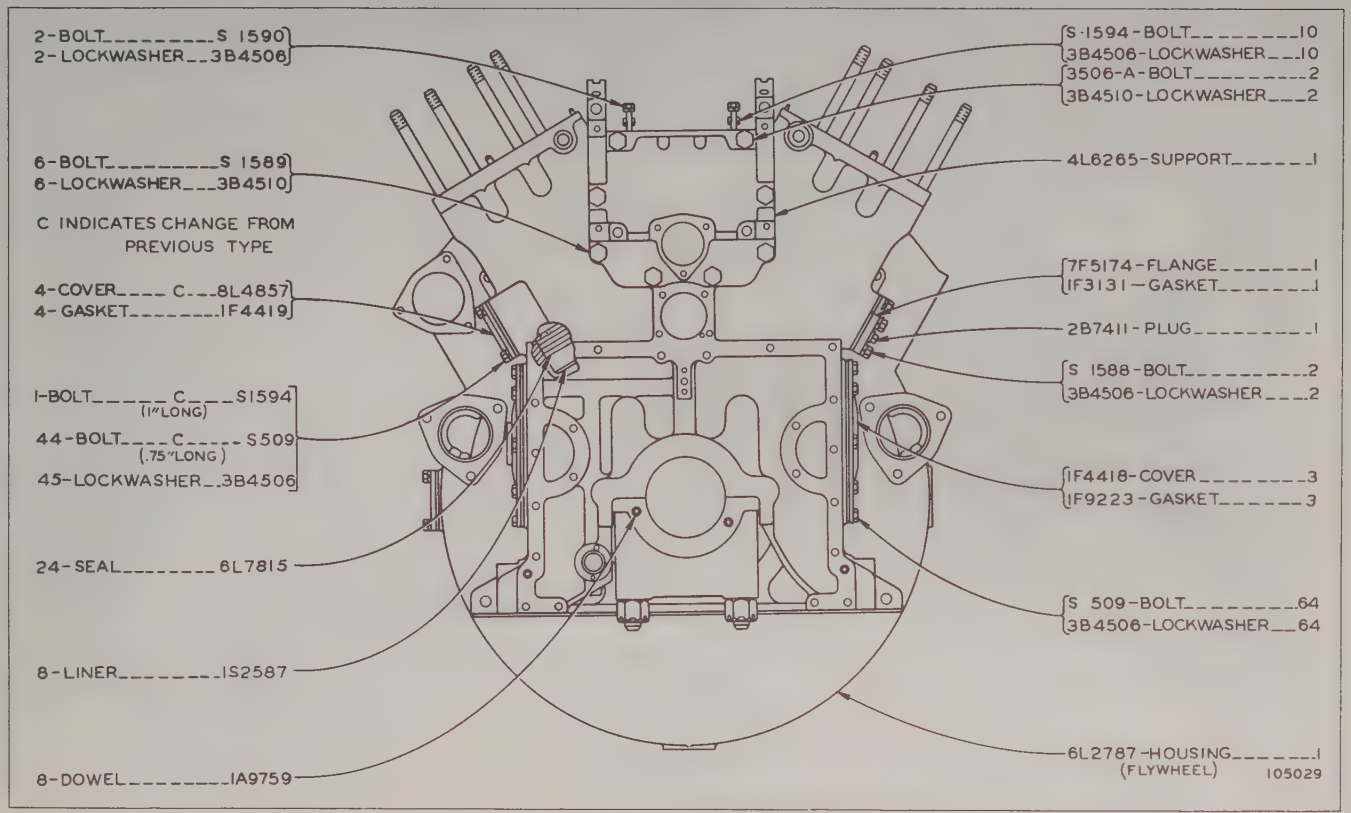

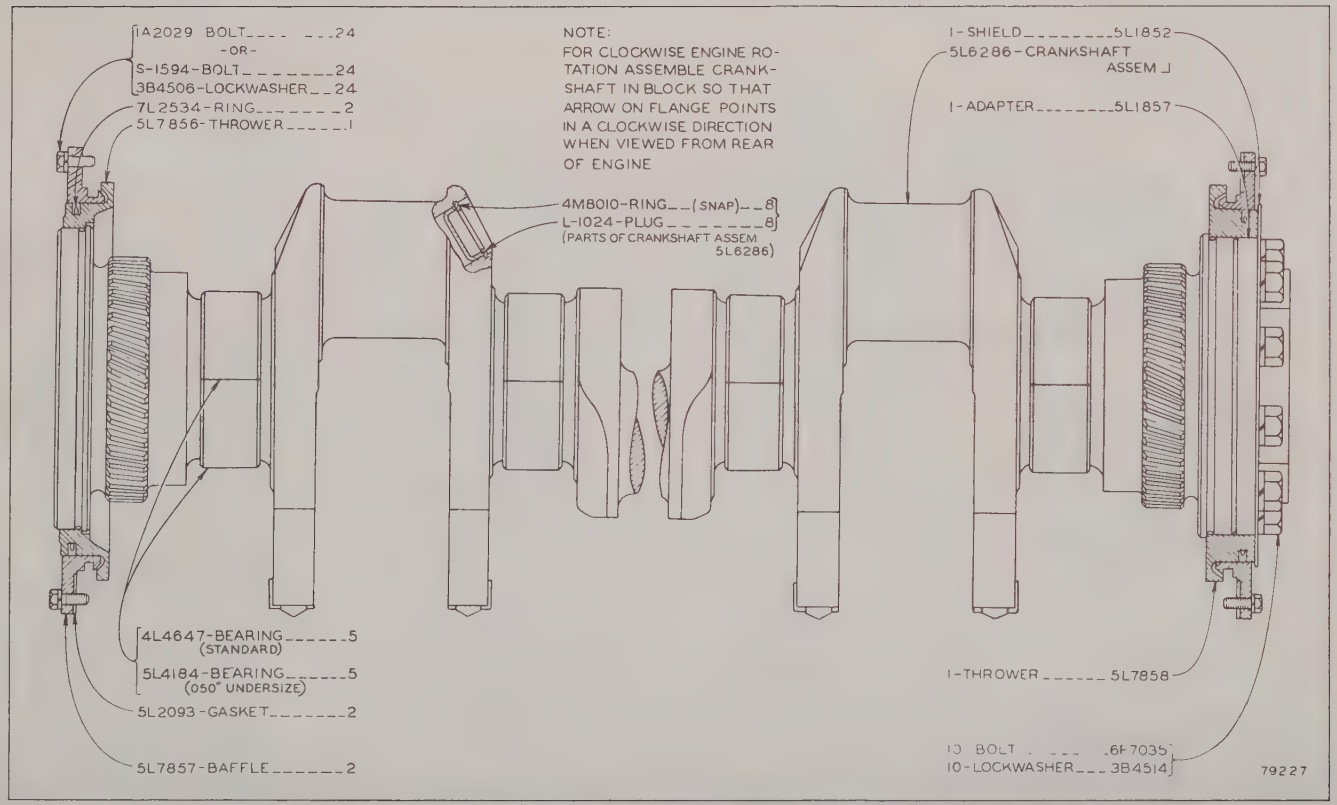

CRANKSHAFT
SERIAL NO. 68B675 TO 68B1004 INCLUSIVE AND 76B1 TO 76B124 INCLUSIVE

CRANKSHAFT

EFFECTIVE WITH SERIAL No. 68B1005-UP AND 76B125-UP

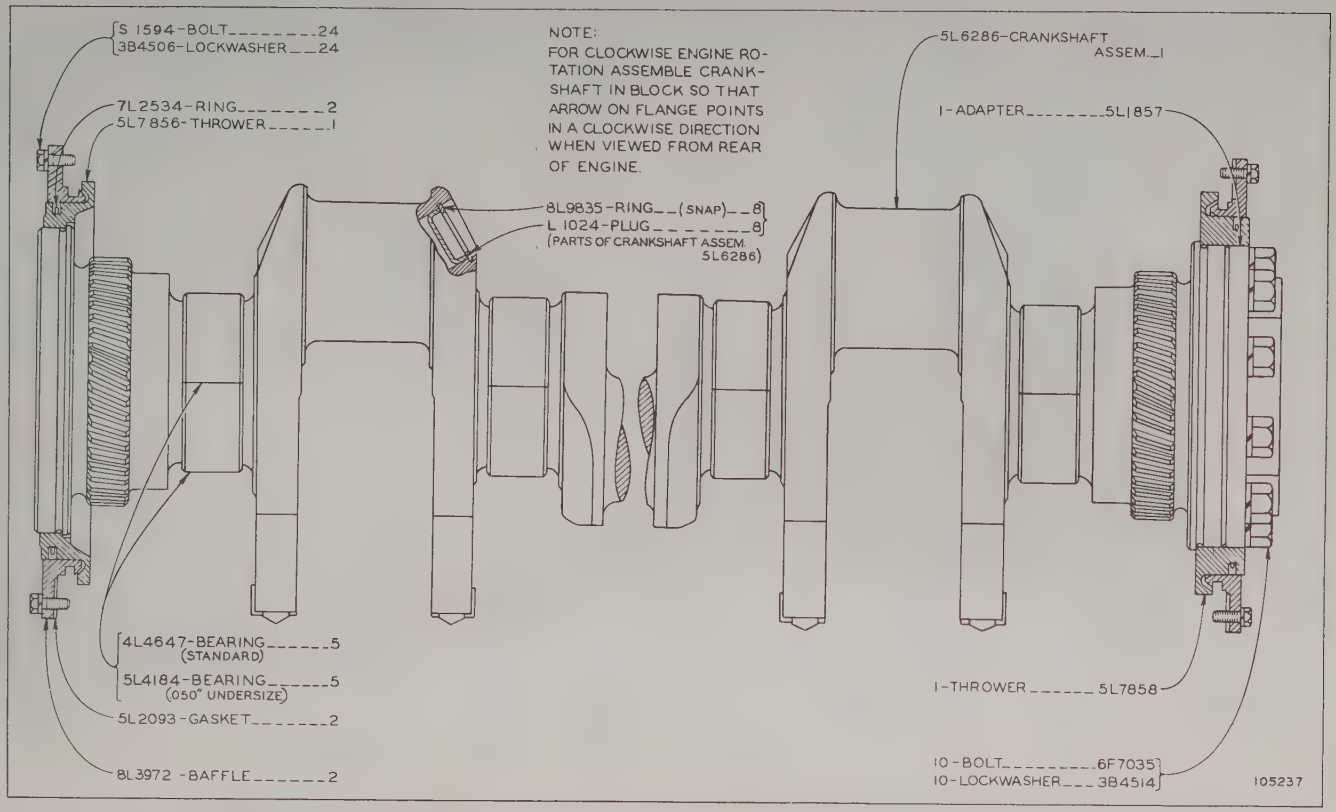

PROPERTY OF U. S. GOV'T.

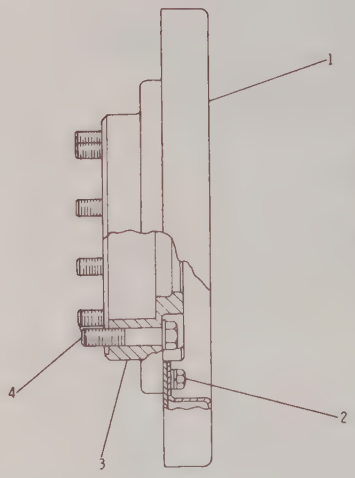

REF NO	PART NUMBER	DESCRIPTION	QTY
1	2P1793	DAMPER ASSEM.	1
2	S1587	BOLT	10
	3B4508	LOCKWASHER	10
	3H7654	WASHER	10
3	3N8785	ADAPTER	1
4	T603	BOLT	10
	4M6953	WASHER	10

156190

3N9587 DAMPER GROUP
Serial No. 68B884—Up. AN ATTACHMENT

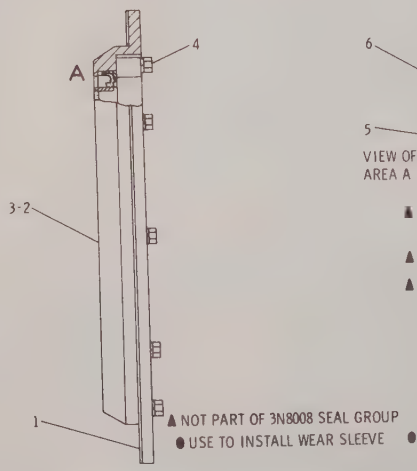

▲ NOT PART OF 3N8008 SEAL GROUP
● USE TO INSTALL WEAR SLEEVE

REF NO	PART NUMBER	DESCRIPTION	QTY
1	5L2093	GASKET	1
2	3N3170	ADAPTER	1

	REF NO	PART NUMBER	DESCRIPTION	QTY
▲	3	3N7821	ADAPTER (Use with 5L1857 Adapter)	1
▲		3N7822	ADAPTER (Use with 4L8819 Adapter)	1
▲		3N7823	ADAPTER (Use with 7L2571 Adapter)	1
	4	1A9579	BOLT	8
		3B4505	LOCKWASHER	8
		3N3333	SPACER	8
	5	7D1979	SEAL	1
	6	3N7311	SLEEVE	1
	7	3N3166	SEAL	1
●	8	8S4754	BOLT—.875 in. (2.22 cm) diameter	4
●		8S4755	BOLT—1 in. (2.54 cm) diameter (Use as Required)	4
●	9	5P3022	INSTALLER	1
			THE FOLLOWING REPAIR KIT IS AVAILABLE:	
		3N8049	LOCTITE KIT—(service)	1
		GMG02487	FORM	1
			(Installing Crankshaft Seal Conversion Groups)	

152603

3N8008 CRANKSHAFT CONVERSION SEAL GROUP—Field Installation

1P2040 Diesel Engine Complete

1P2037 Valve Grinding

1S851 Water Pump

1S3523 Gasoline Starting Engine Basic

1S4517 Gasoline Starting Engine Supplementary

9M5676 Gasoline Starting Engine Clutch Mechanism Repair

GASKET KITS

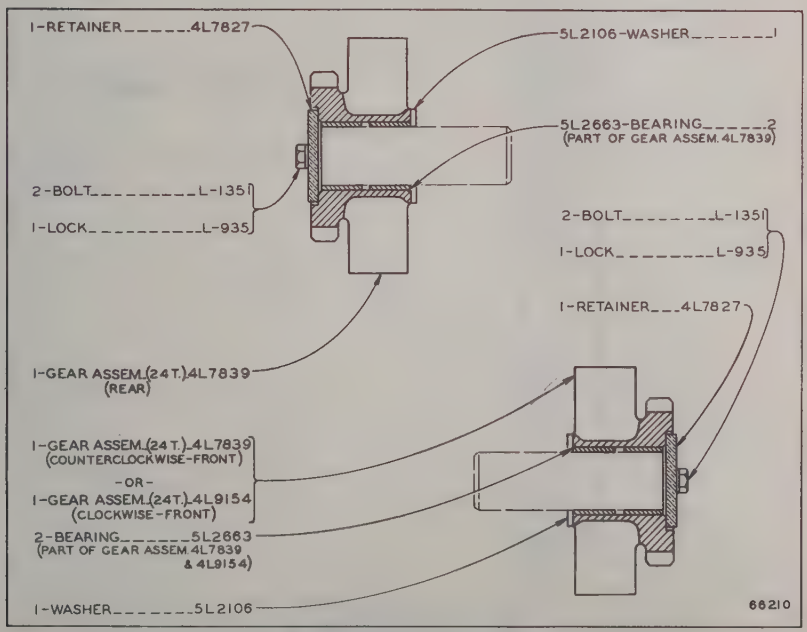

BALANCER (4L8787 N/S)
Serial No. 68B675 to 68B883 inclusive and 76B1 to 76B104 inclusive

PRINTED IN U.S.A.

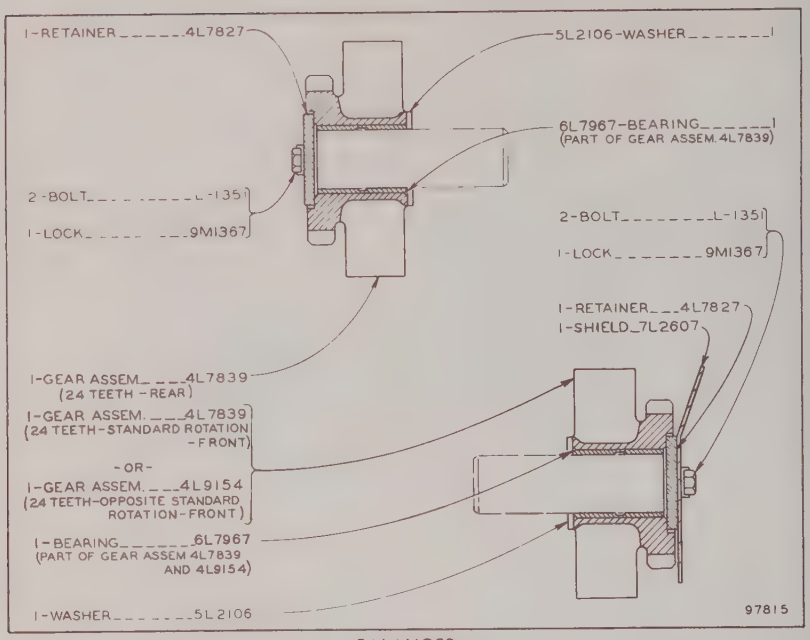

BALANCER

Effective with Serial No. 68B884—Up and 76B105—Up

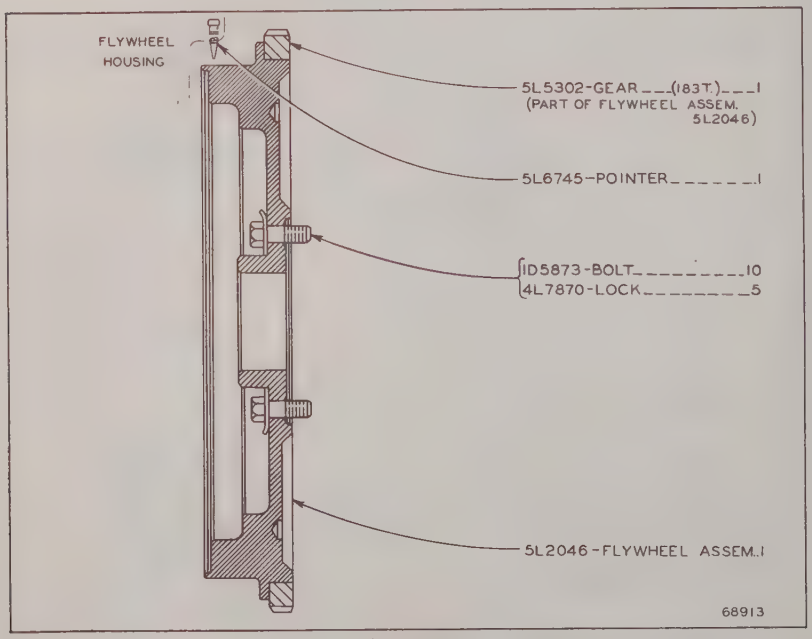

FLYWHEEL

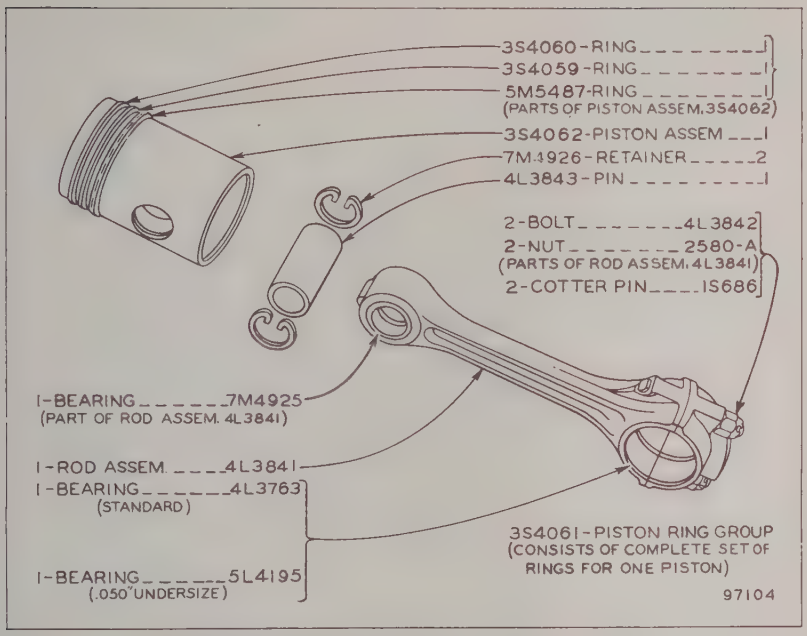

CONNECTING ROD AND PISTON--8 REQUIRED
EFFECTIVE WITH SERIAL No. 68B675
PART OF 4L1129, 5L2736 & 5L7143 ARRANGEMENTS LISTED ON PAGE 5

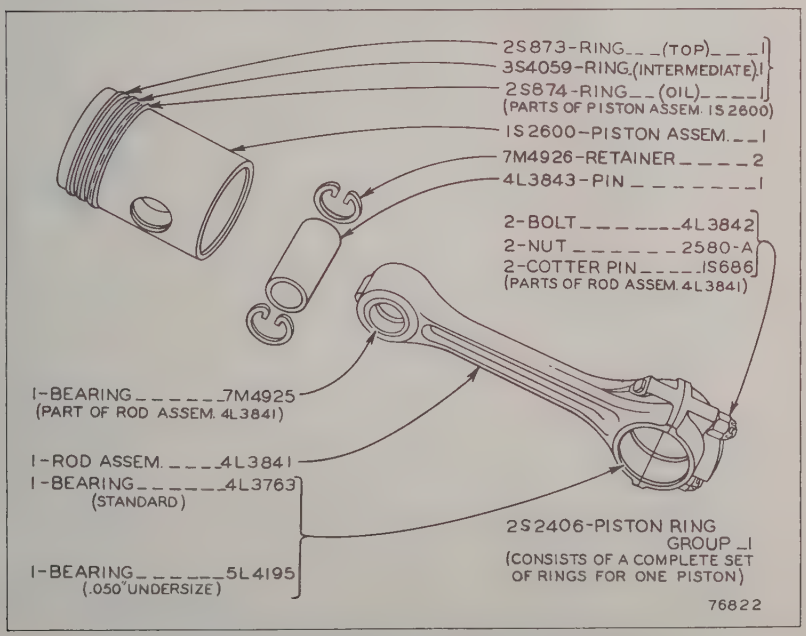

CONNECTING ROD AND PISTON--8 REQUIRED
SERIAL No. 76B1 TO 76B124 INCLUSIVE
PART OF 6L4985 & 5L7143 ARRANGEMENTS LISTED ON PAGE 5

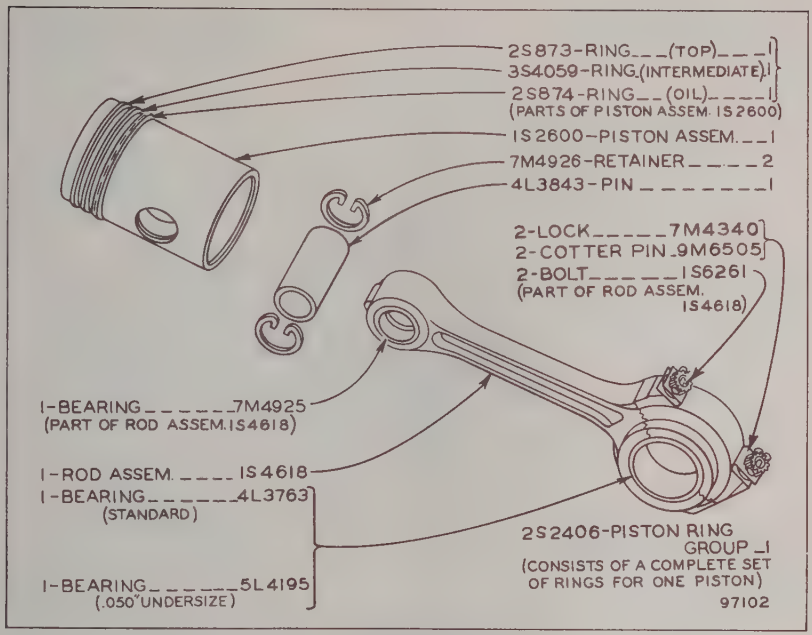

CONNECTING ROD AND PISTON (6L2868 N/S)—8 Required
Serial No. 76B125 to 76B159 inclusive
Part of 6L4985 & 5L7143 Arrangements listed on Page 5

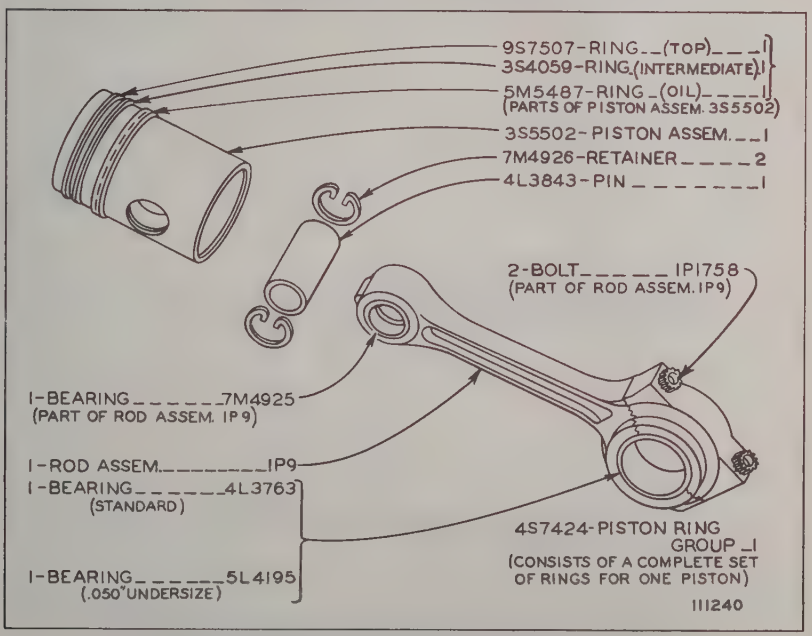

CONNECTING ROD AND PISTON (6L2868 N/S)—8 Required
Effective with Serial No. 76B160
Part of 6L4985 & 5L7143 Arrangements listed on Page 5

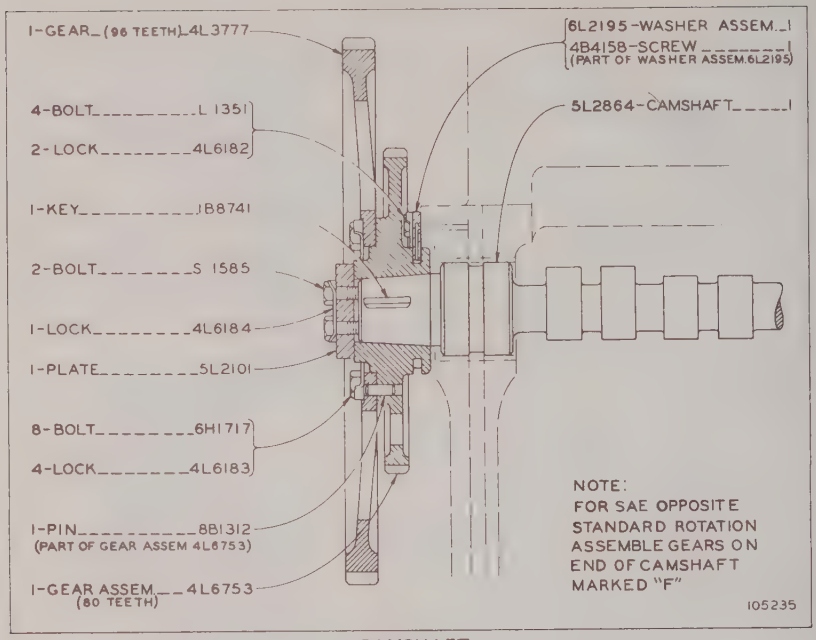

CAMSHAFT

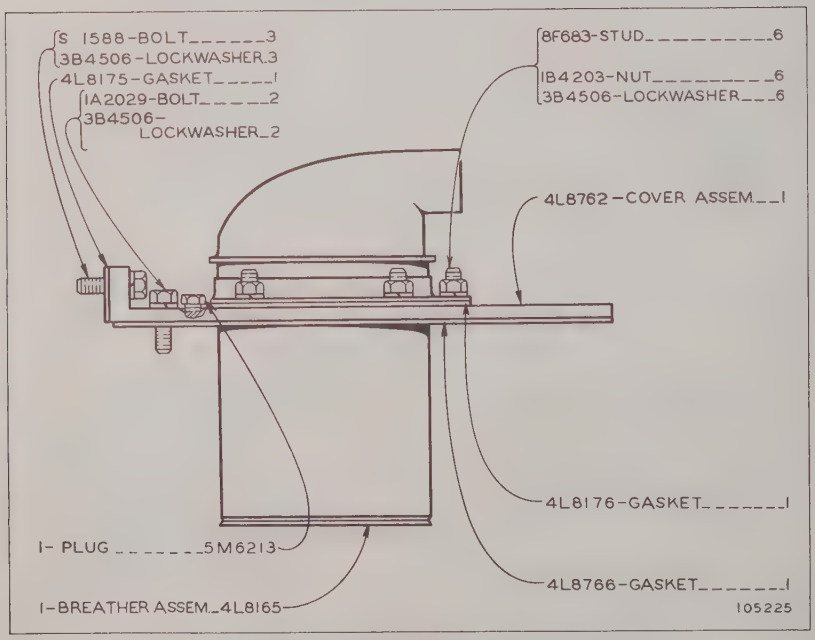

BREATHER
Effective with Serial No. 68B675-Up and 76B88-Up

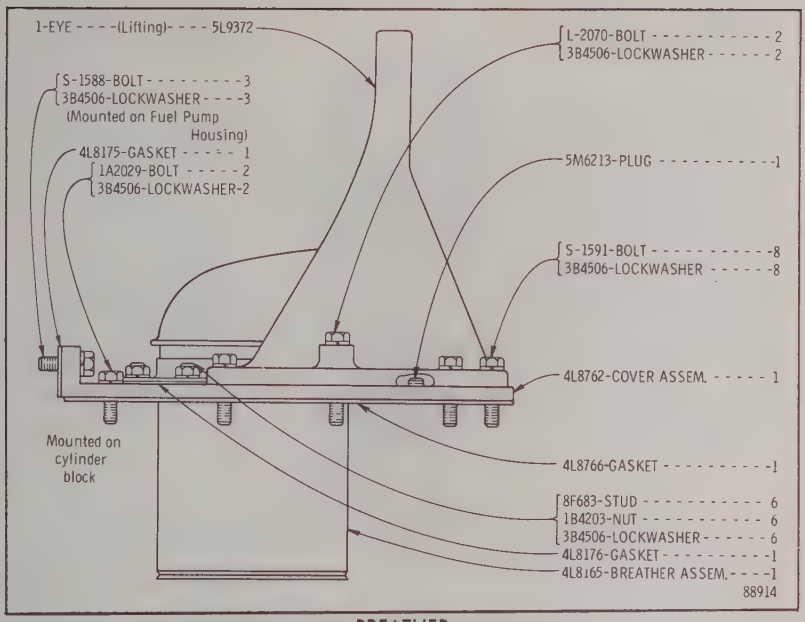

BREATHER

Serial No. 7681 to 7687 inclusive

PART OF 6L4985 S.A.E. STANDARD AND 5L7143 S.A.E. OPPOSITE STANDARD ROTATION TURBOCHARGED ENGINE ARRANGEMENTS

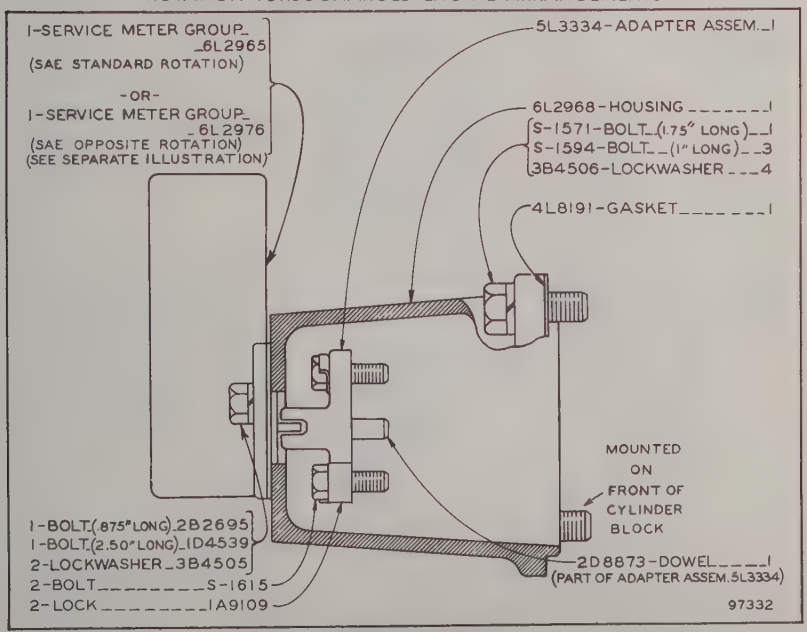

SERVICE METER

6L2965 and 6L2976 Service Meter Group parts are shown on Page 56

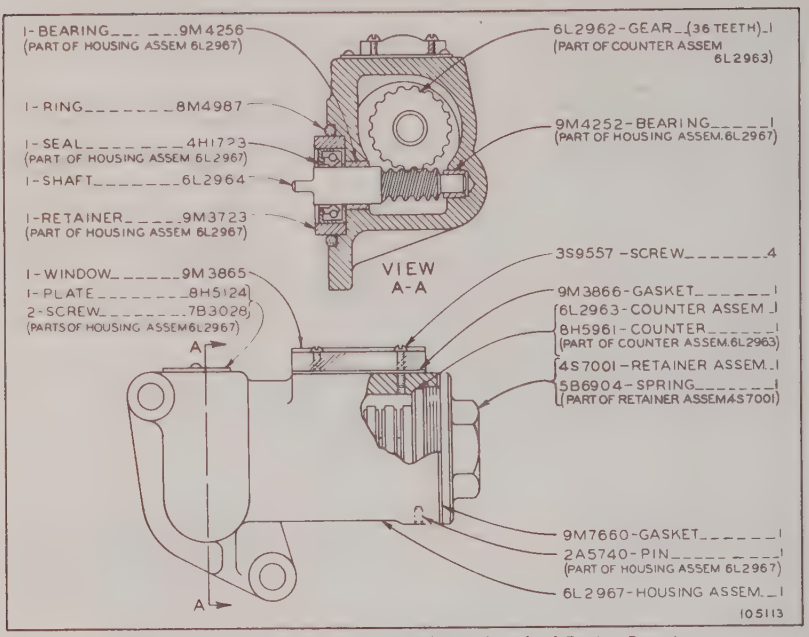

6L2965 SERVICE METER GROUP—S.A.E. Standard Engine Rotation
Part of Service Meter shown on Page 55

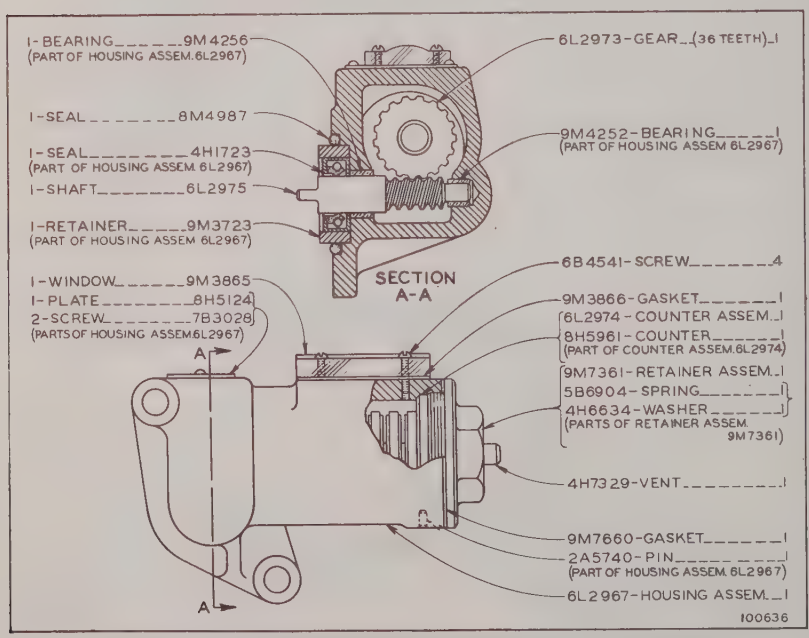

6L2976 SERVICE METER GROUP—S.A.E. Opposite Standard Engine Rotation
Part of Service Meter shown on Page 55

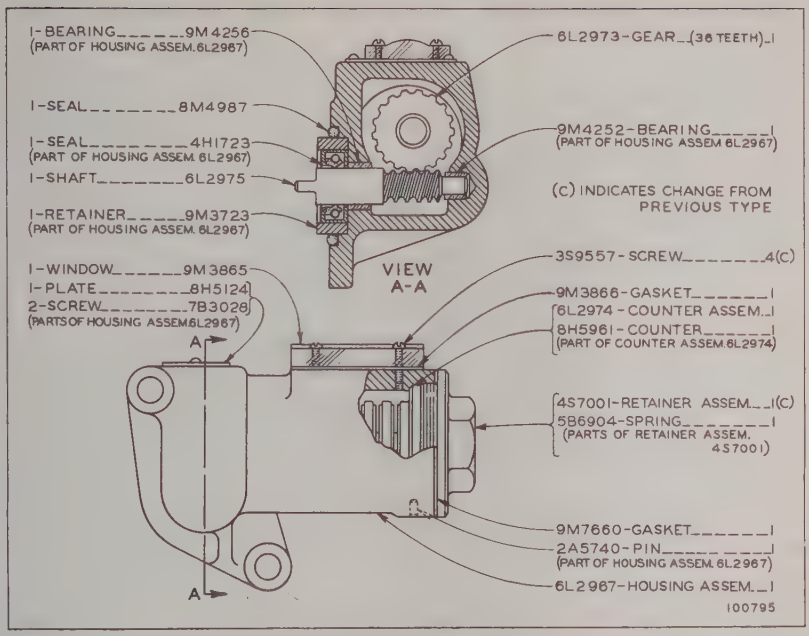

6L2976 SERVICE METER GROUP--TYPE 2
S.A.E. OPPOSITE STANDARD ENGINE ROTATION
PART OF SERVICE METER SHOWN ON PAGE 55

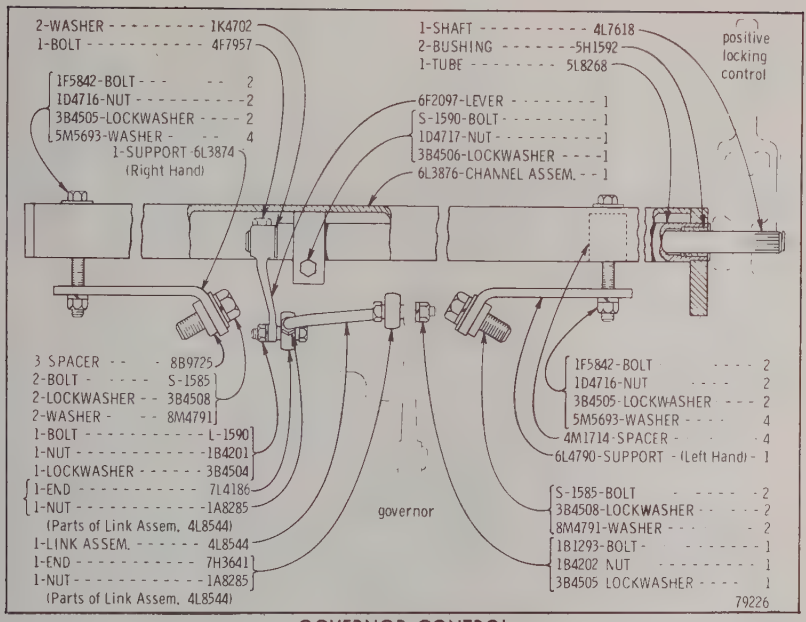

GOVERNOR CONTROL
Effective with Serial No. 68B675
PART OF 4L1129 S.A.E. STANDARD, 5L2736 AND 5L7143 S.A.E. OPPOSITE STANDARD ROTATION TURBOCHARGED ENGINE ARRANGEMENTS

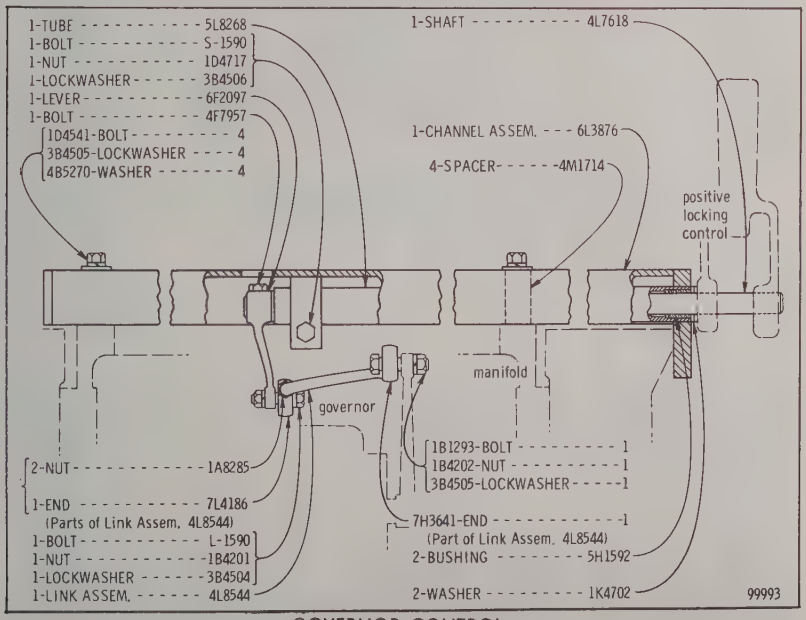

GOVERNOR CONTROL
Effective with Serial No. 76B1
PART OF 6L4985 S.A.E. STANDARD AND 5L7143 S.A.E. OPPOSITE STANDARD ROTATION TURBOCHARGED ENGINE ARRANGEMENTS

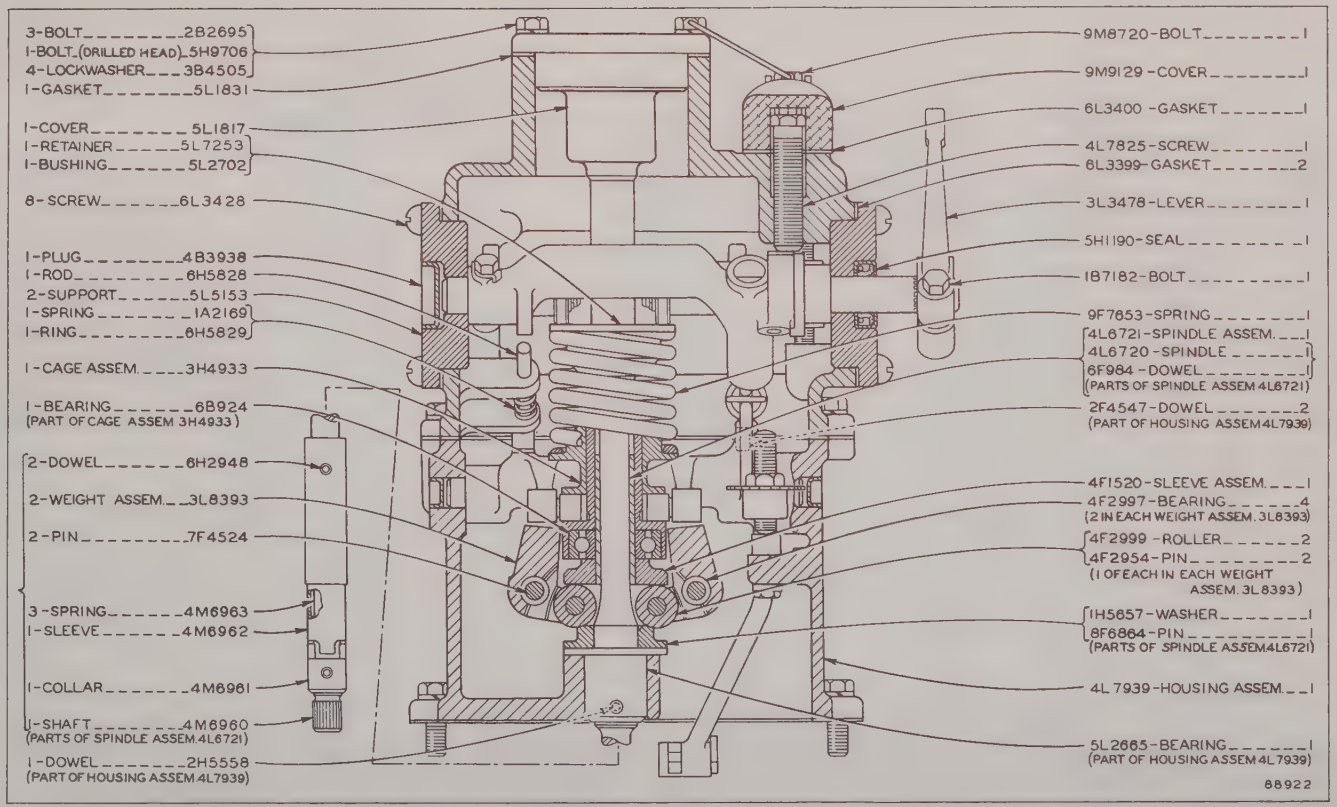

4L1144 GOVERNOR GROUP--PART 1

SERIAL NO. 68B675 TO 68B1173 INCLUSIVE AND 76B1 TO 76B194 INCLUSIVE

REFER ALSO TO PAGES 166 THROUGH 171 FOR SPECIAL PARTS

4L1144 GOVERNOR GROUP--PART 2

SERIAL No. 68B675 TO 68B1173 INCLUSIVE AND 76B1 TO 76B194 INCLUSIVE

REFER ALSO TO PAGES 166 THROUGH 171 FOR SPECIAL PARTS

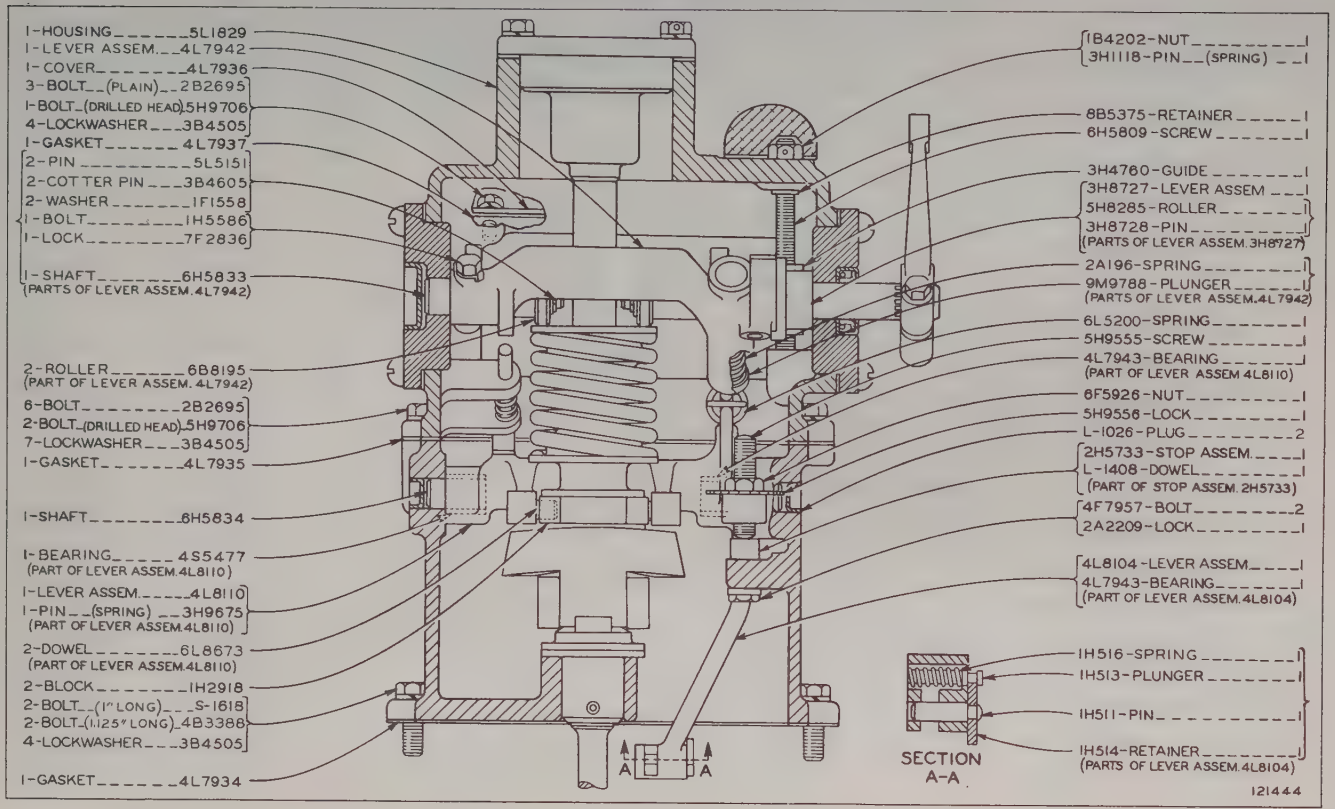

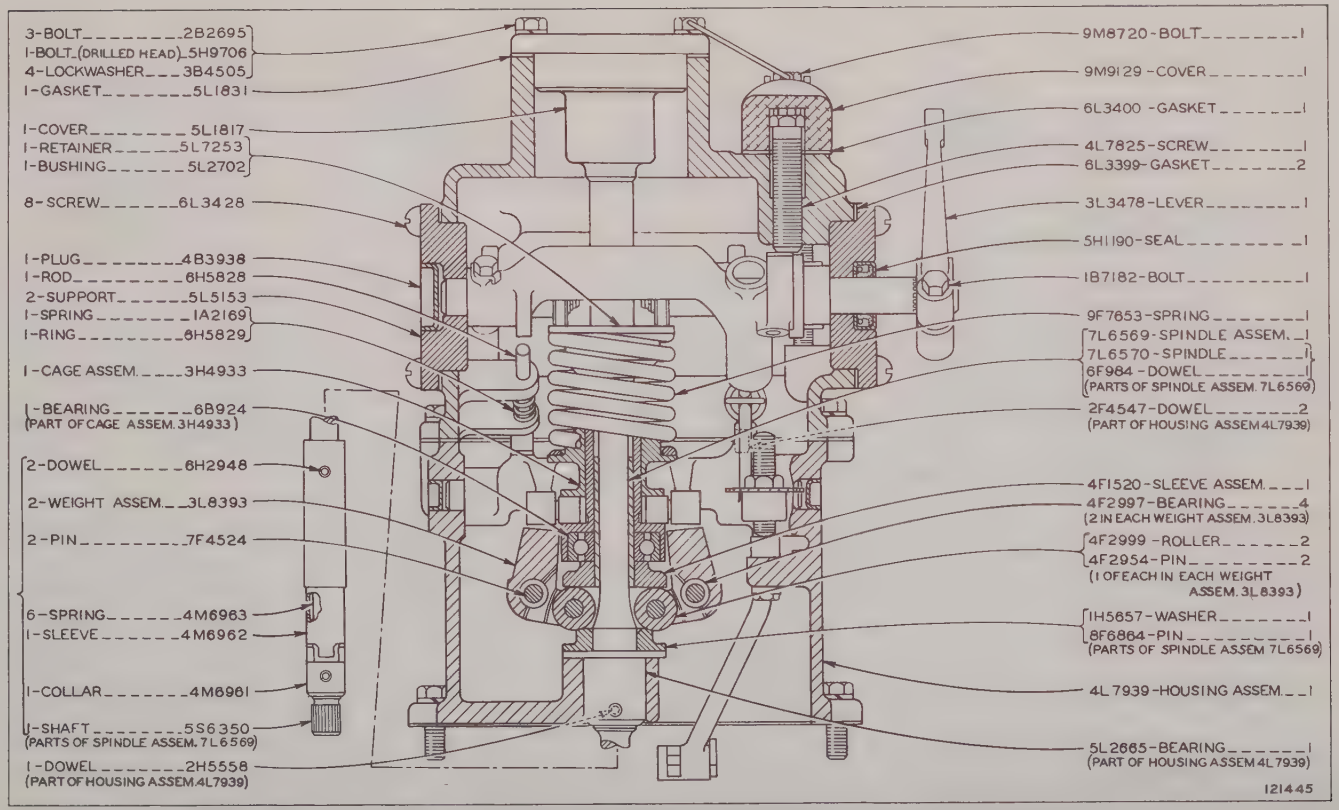

4L1144 GOVERNOR GROUP--PART 1

EFFECTIVE WITH SERIAL No. 68B1174-UP AND 76B195-UP

REFER ALSO TO PAGES 166 THROUGH 171 FOR SPECIAL PARTS

4L1144 GOVERNOR GROUP--PART 2

EFFECTIVE WITH SERIAL No. 68B1174-UP AND 76B195-UP

REFER ALSO TO PAGES 166 THROUGH 171 FOR SPECIAL PARTS

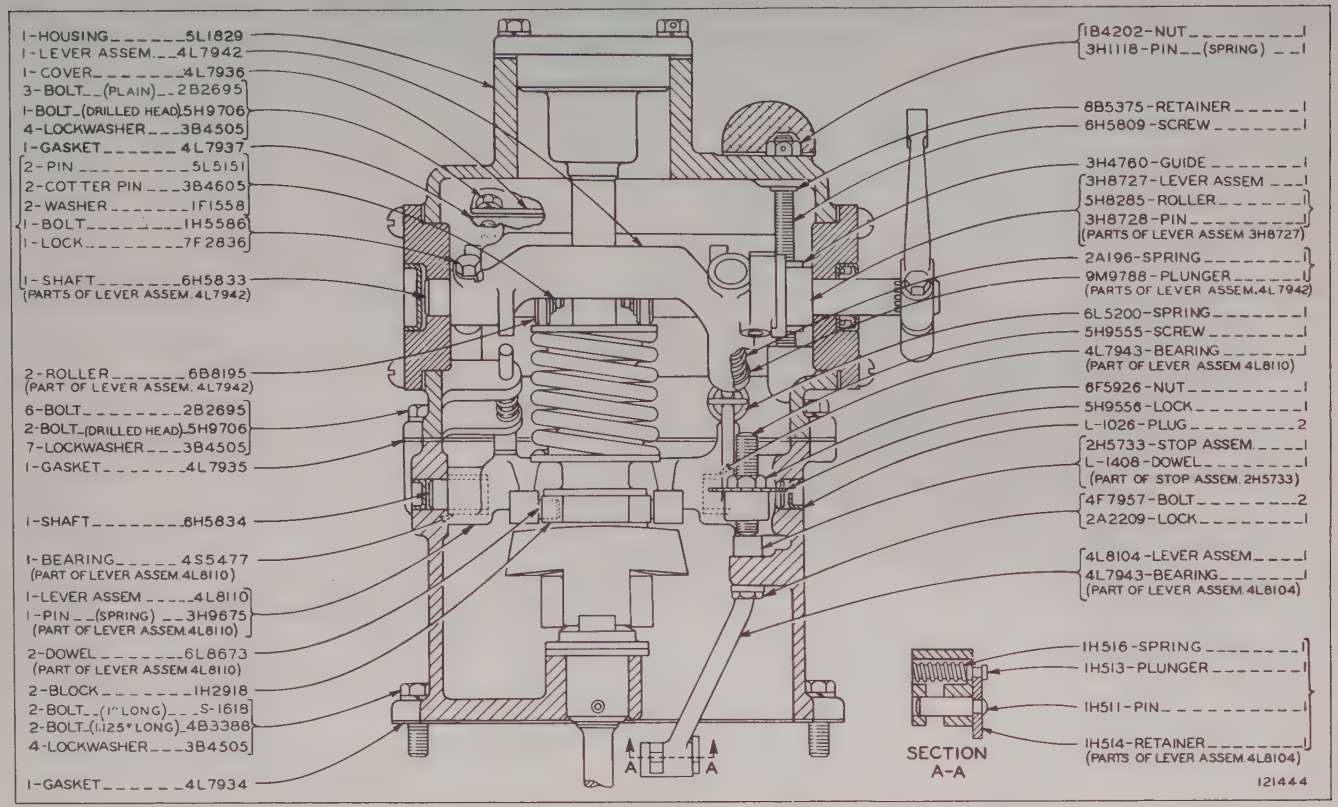

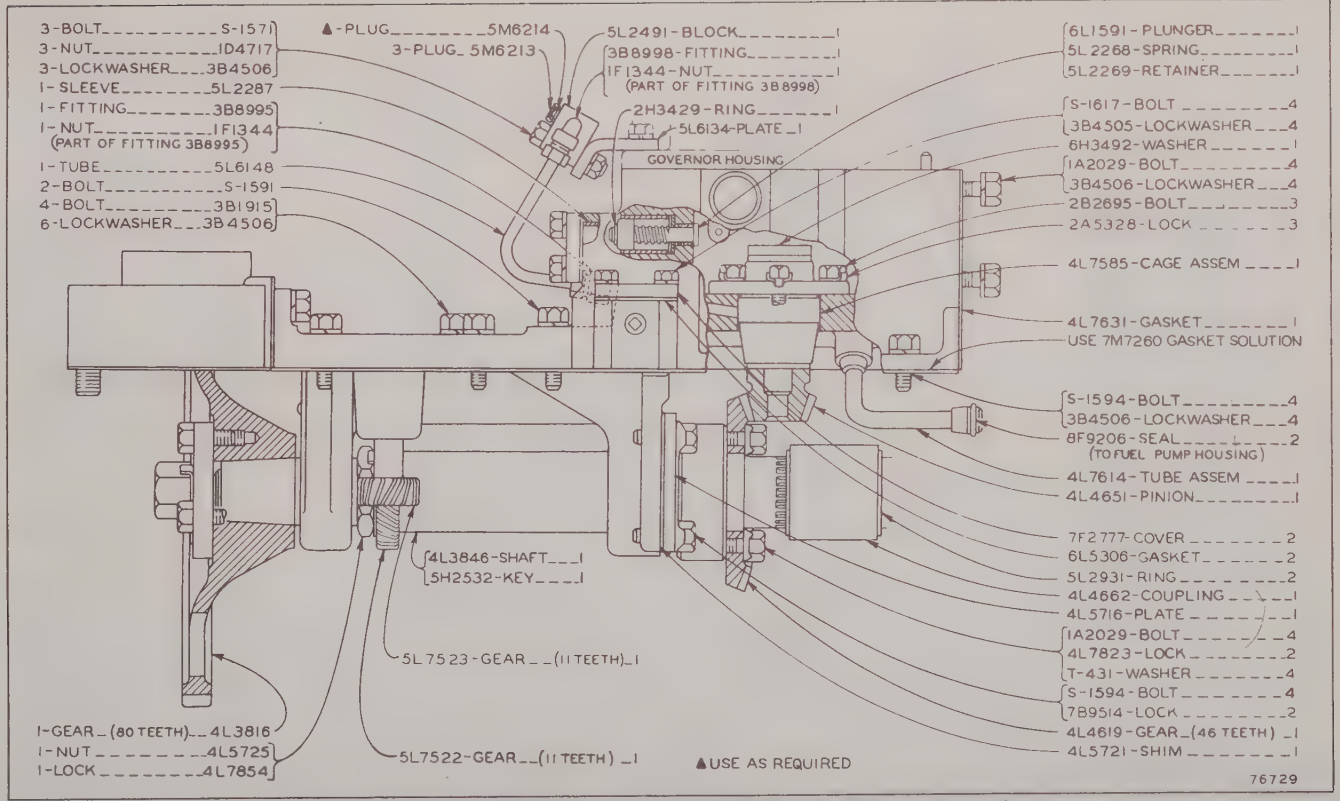

FUEL PUMP AND GOVERNOR DRIVE—S.A.E. Standard Engine Rotation—Part One
Serial No. 68B675 to 68B876 inclusive and 76B1 to 76B104 inclusive
PART OF 4L1129 AND 6L4985 TURBOCHARGED ENGINE ARRANGEMENTS

FUEL PUMP AND GOVERNOR DRIVE—S.A.E. Standard Engine Rotation—Part Two

Serial No. 68B675 to 68B876 inclusive and 76B1 to 76B104 inclusive

PART OF 4L1129 AND 6L4985 TURBOCHARGED ENGINE ARRANGEMENTS

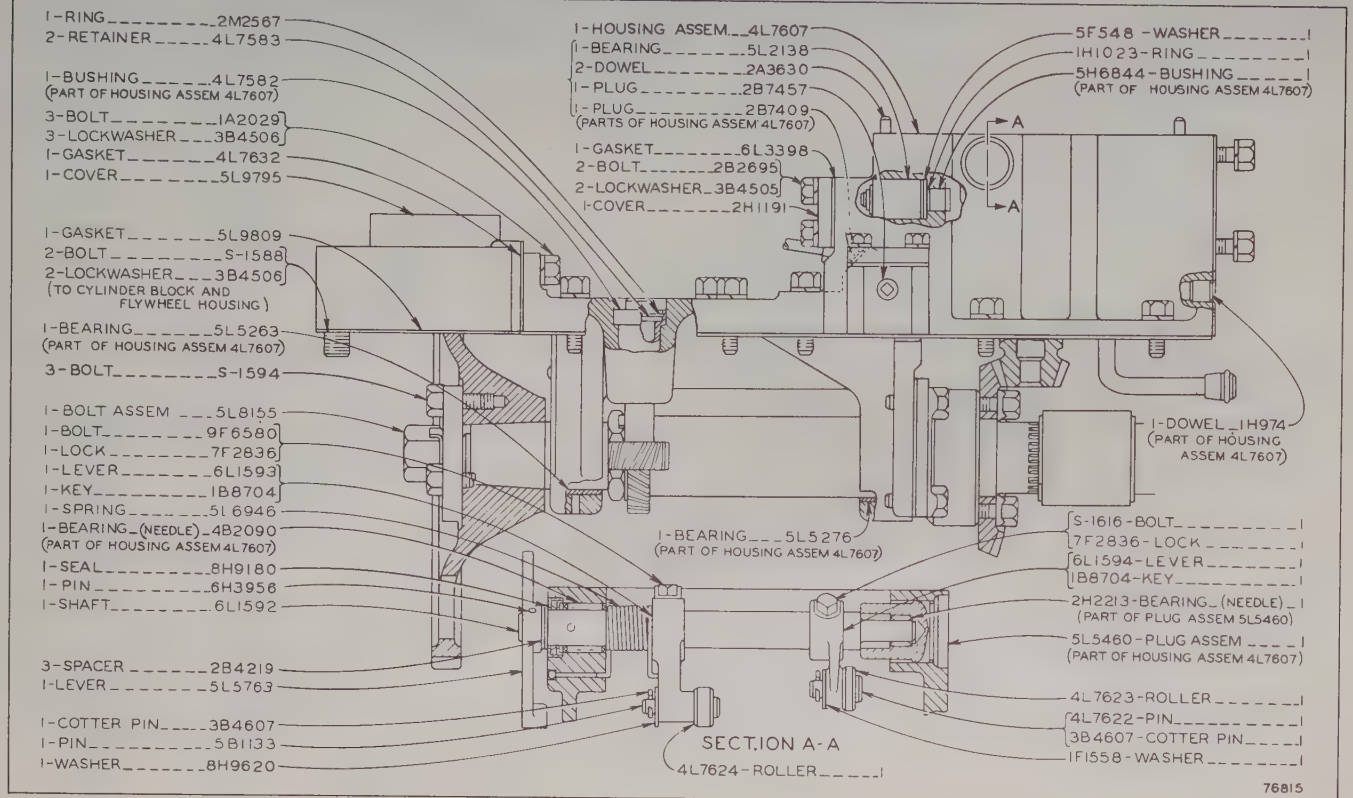

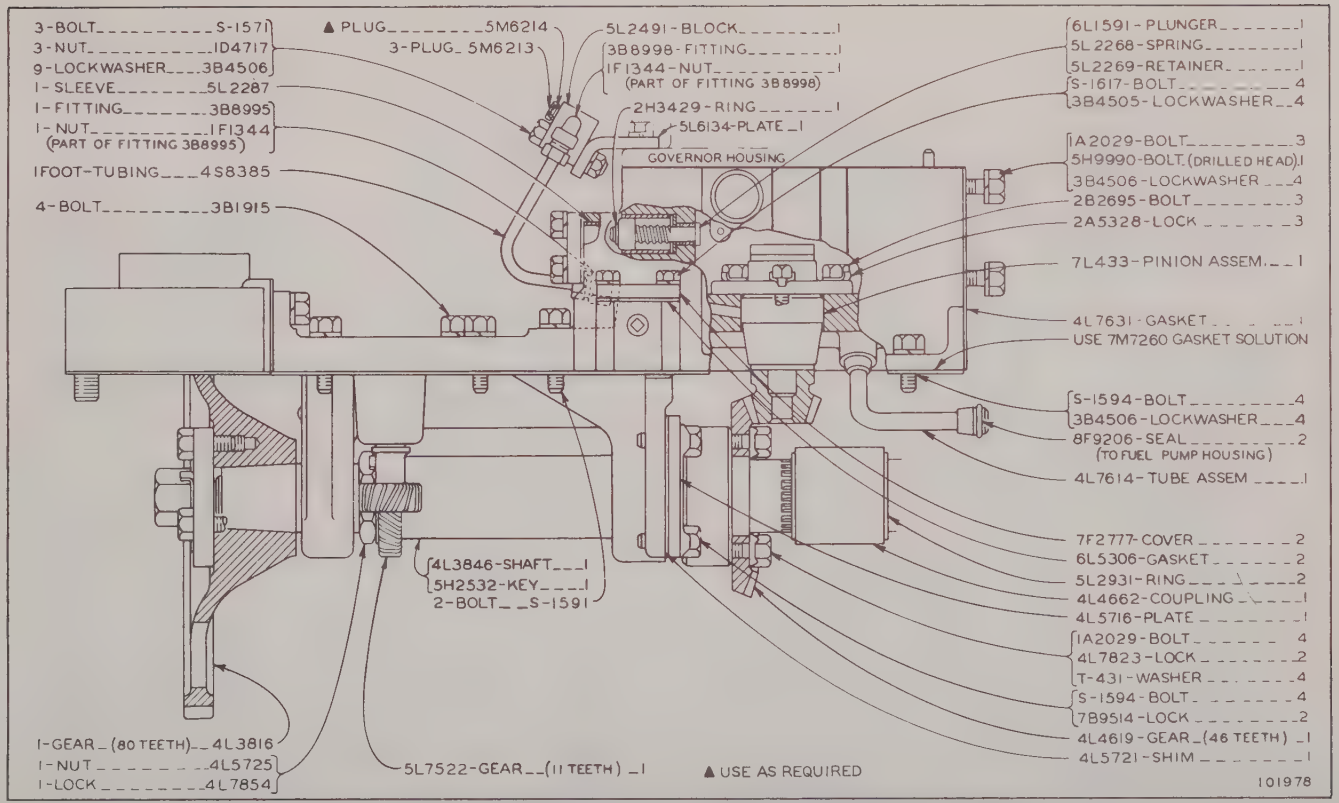

FUEL PUMP AND GOVERNOR DRIVE—S.A.E. Standard Engine Rotation—Part One
Effective with Serial No. 68B877—Up and 76B105—Up
PART OF 4L1129 AND 6L4985 TURBOCHARGED ENGINE ARRANGEMENTS

FUEL PUMP AND GOVERNOR DRIVE--S.A.E. STANDARD ENGINE ROTATION--PART 2
EFFECTIVE WITH SERIAL NO. 68B877-UP AND 76B105-UP
PART OF 4L1129 AND 6L4985 TURBOCHARGED ENGINE ARRANGEMENTS

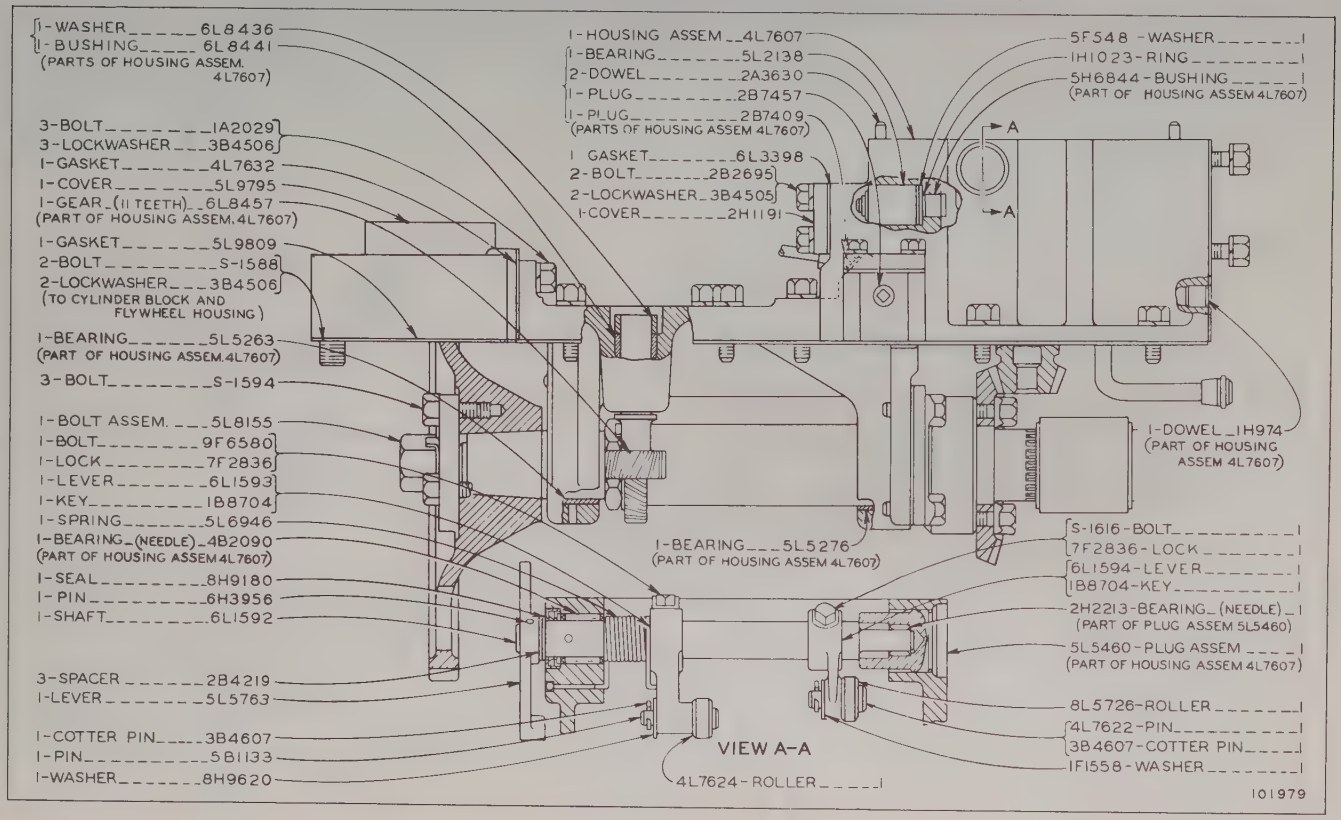

PROPERTY OF U. S. GOV'T.

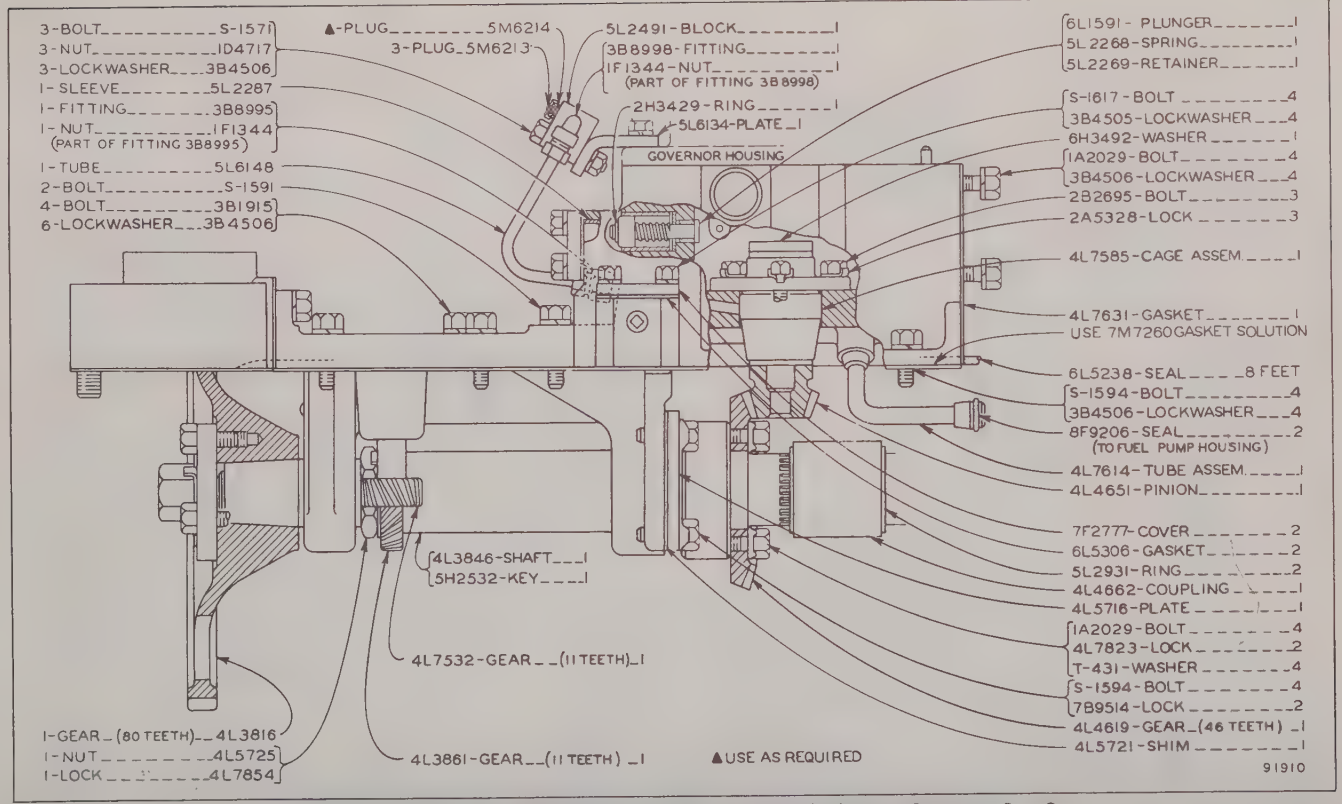

FUEL PUMP AND GOVERNOR DRIVE—S.A.E. Opposite Standard Engine Rotation—Part One
Serial No. 68B675 to 68B876 inclusive and 76B1 to 76B104 inclusive
PART OF 5L2736 AND 5L7143 TURBOCHARGED ENGINE ARRANGEMENTS

FUEL PUMP AND GOVERNOR DRIVE—S.A.E. Opposite Standard Engine Rotation—Part Two

Serial No. 68B675 to 68B876 inclusive and 76B1 to 76B104 inclusive

PART OF 5L2736 AND 5L7143 TURBOCHARGED ENGINE ARRANGEMENTS

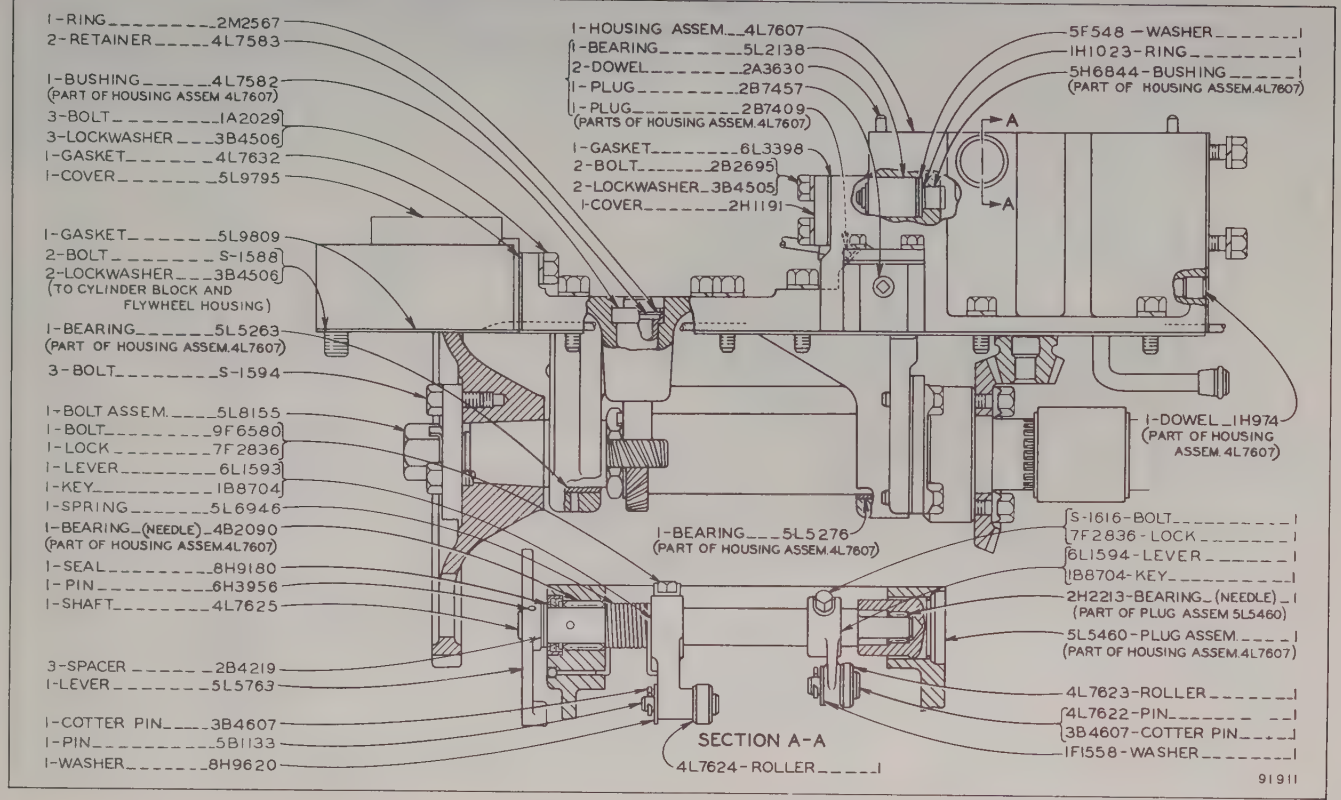

PROPERTY OF U. S. GOV'T.

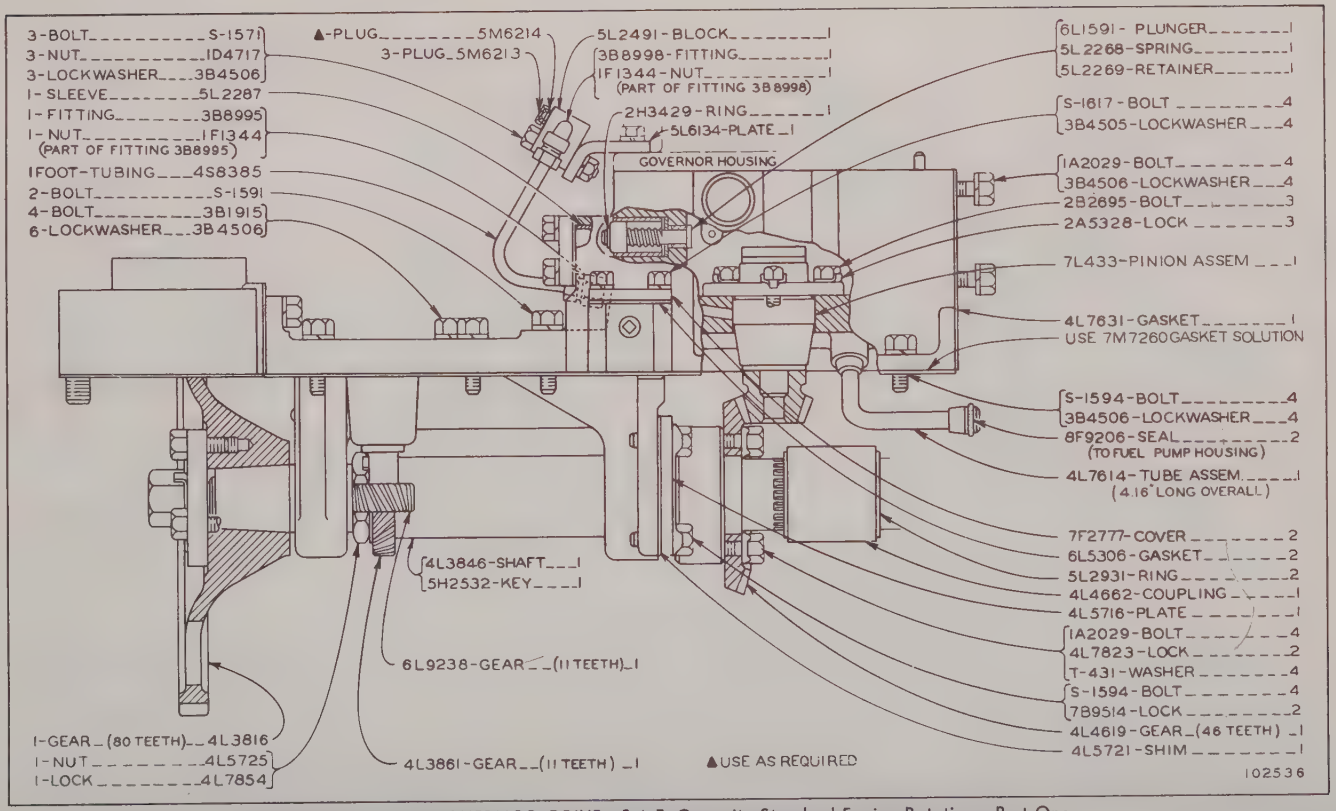

FUEL PUMP AND GOVERNOR DRIVE—S.A.E. Opposite Standard Engine Rotation—Part One
Effective with Serial No. 68B877—Up and 76B105—Up
PART OF 5L2736 AND 5L7143 TURBOCHARGED ENGINE ARRANGEMENTS

FUEL PUMP AND GOVERNOR DRIVE--S.A.E. OPPOSITE STANDARD ENGINE ROTATION--PART 2
EFFECTIVE WITH SERIAL NO. 68B877-UP AND 76B105-UP
PART OF 5L2736 AND 5L7143 TURBOCHARGED ENGINE ARRANGEMENTS

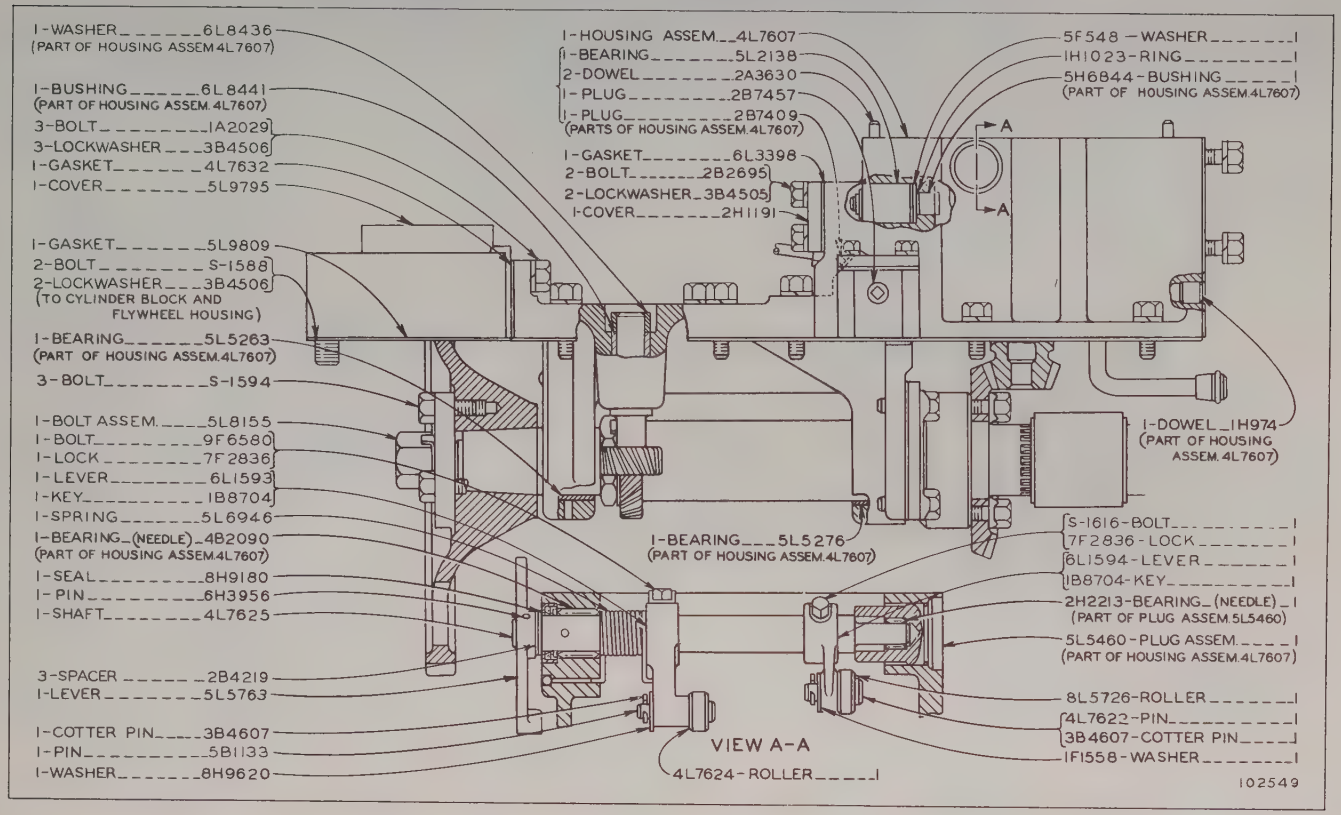

PROPERTY OF U. S. GOV'T.

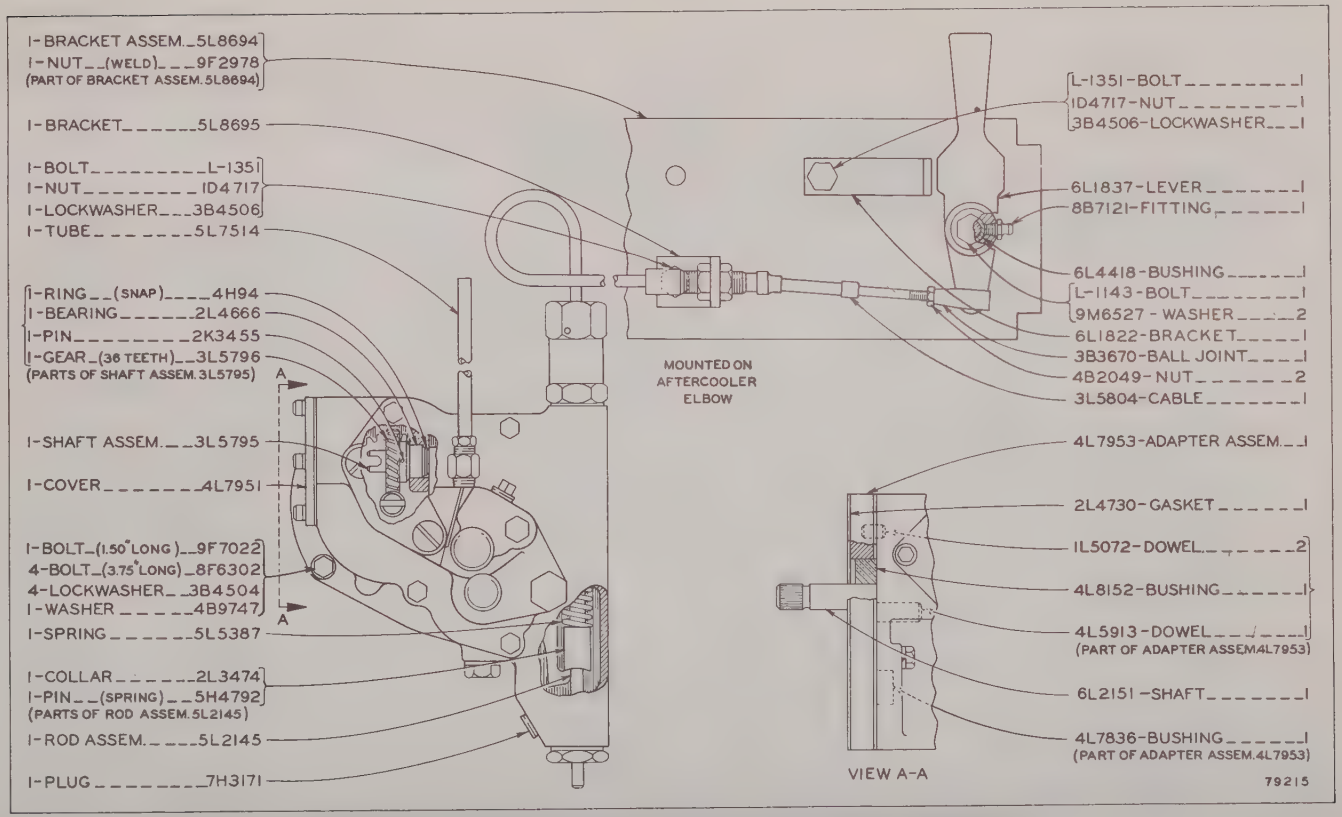

4L8129 SAFETY CONTROL SHUT-OFF GROUP—R.H. and L.H.—Part 1 of 3
Serial No. 68B675 to 68B1063 inclusive and 76B1 to 76B144 inclusive

4L8129 SAFETY CONTROL SHUT-OFF GROUP--Sectional View of Housing—Part 2 of 3
Serial No. 68B675 to 68B1063 inclusive and 76B1 to 76B144 inclusive

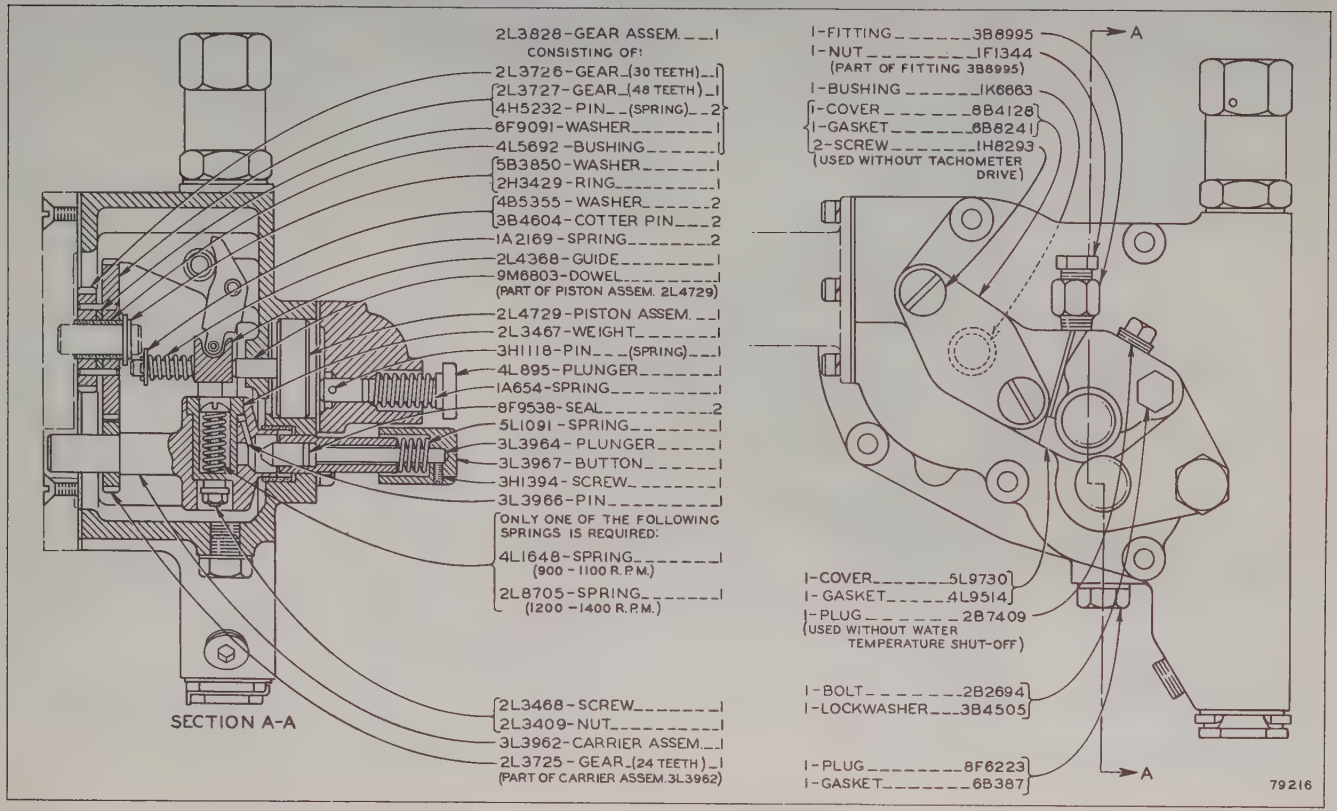

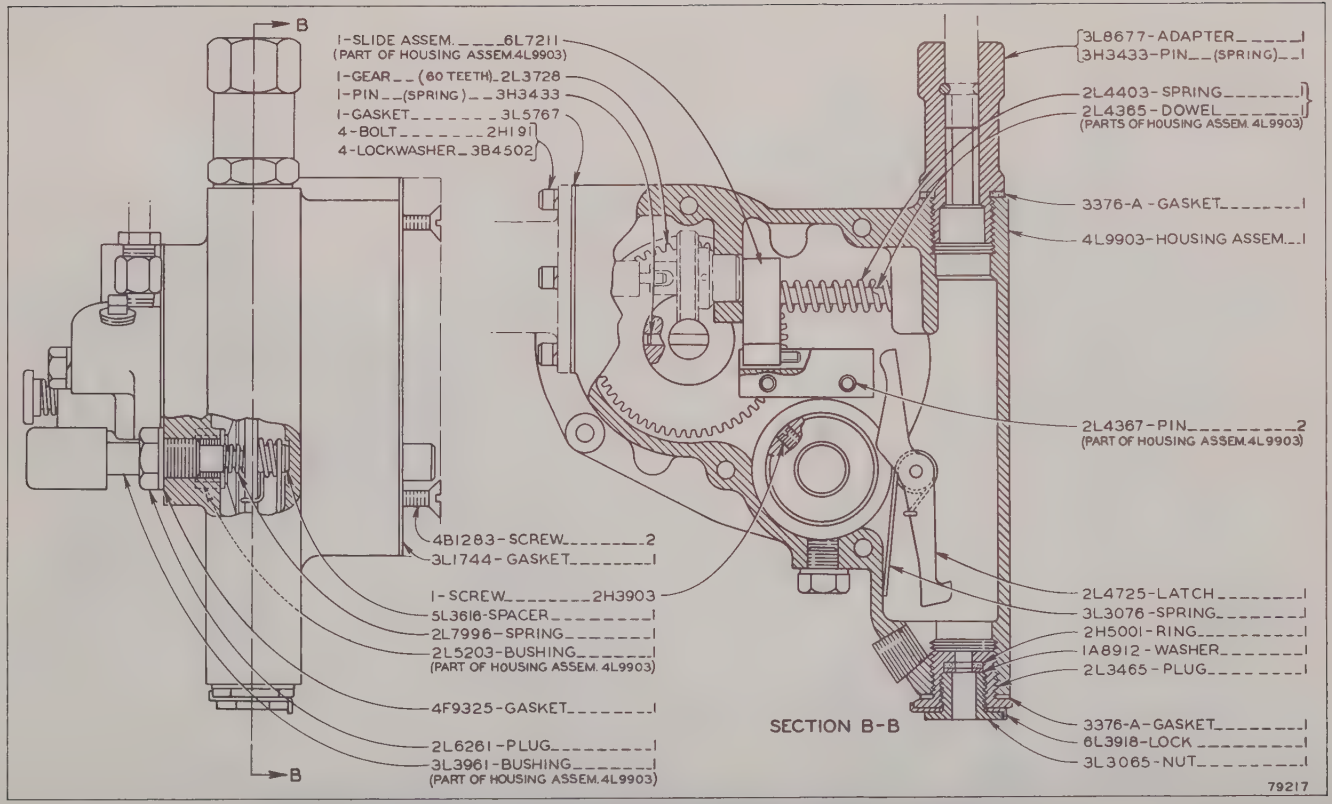

4L8129 SAFETY CONTROL SHUT-OFF GROUP—Sectional View of Housing—Part 3 of 3
Serial No. 68B675 to 68B1063 inclusive and 76B1 to 76B144 inclusive

6L9237 SAFETY CONTROL SHUT-OFF GROUP--R.H. AND L.H.--PART 1 OF 3
SERIAL NO. 68B1064 TO 68B1211 INCLUSIVE AND 76B145 TO 76B206 INCLUSIVE

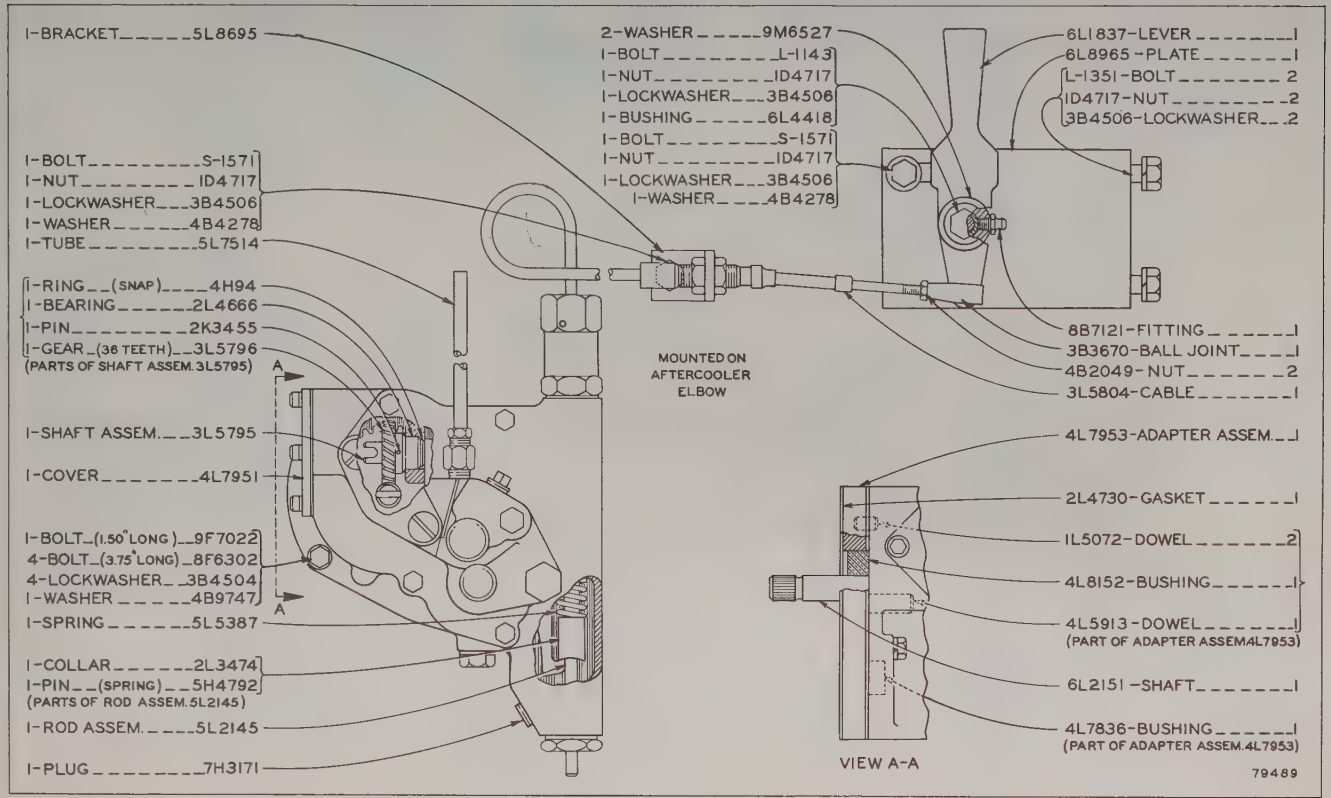

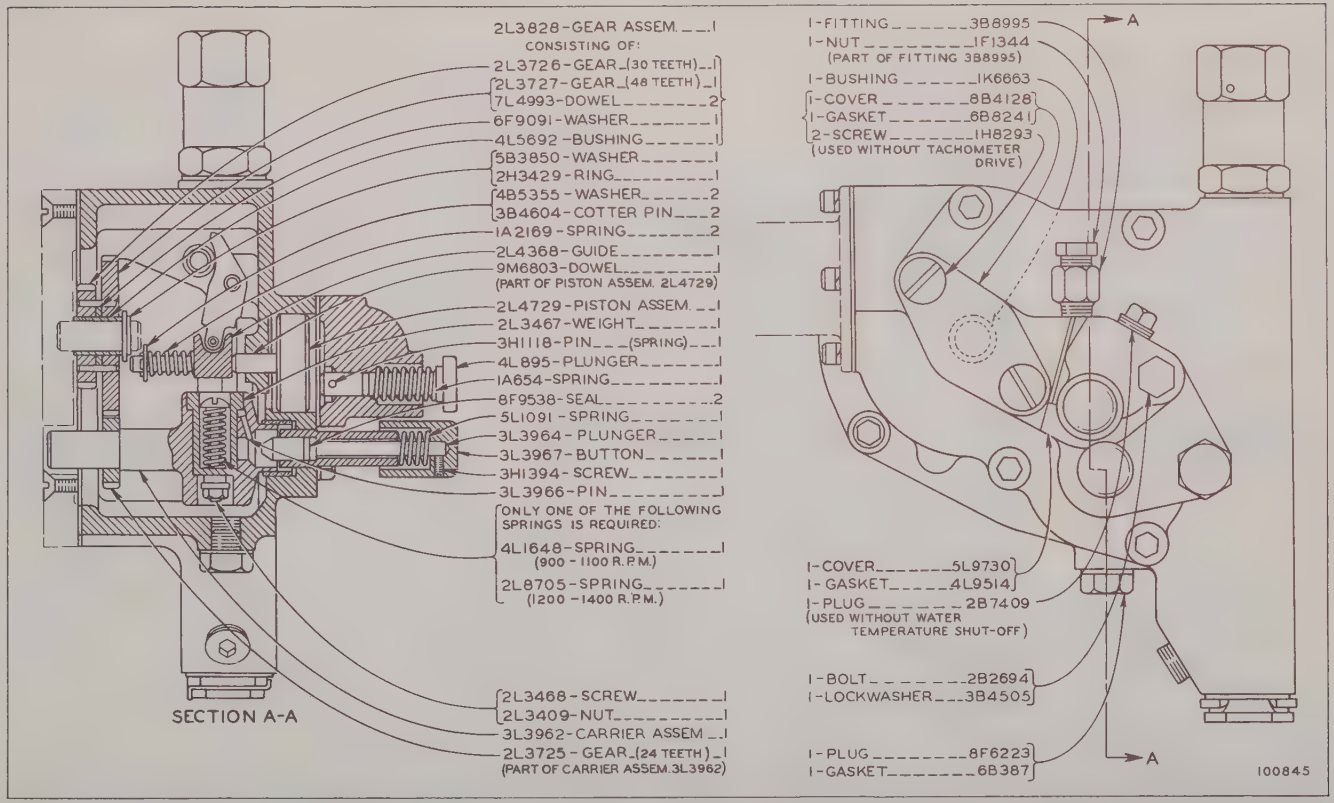

6L9237 SAFETY CONTROL SHUT-OFF GROUP--SECTIONAL VIEW OF HOUSING--PART 2 OF 3
SERIAL NO. 68B1064 TO 68B1211 INCLUSIVE AND 76B145 TO 76B206 INCLUSIVE

6L9237 SAFETY CONTROL SHUT-OFF GROUP--SECTIONAL VIEW OF HOUSING--PART 3 OF 3
SERIAL NO. 68B1064 TO 68B1211 INCLUSIVE AND 76B145 TO 76B206 INCLUSIVE

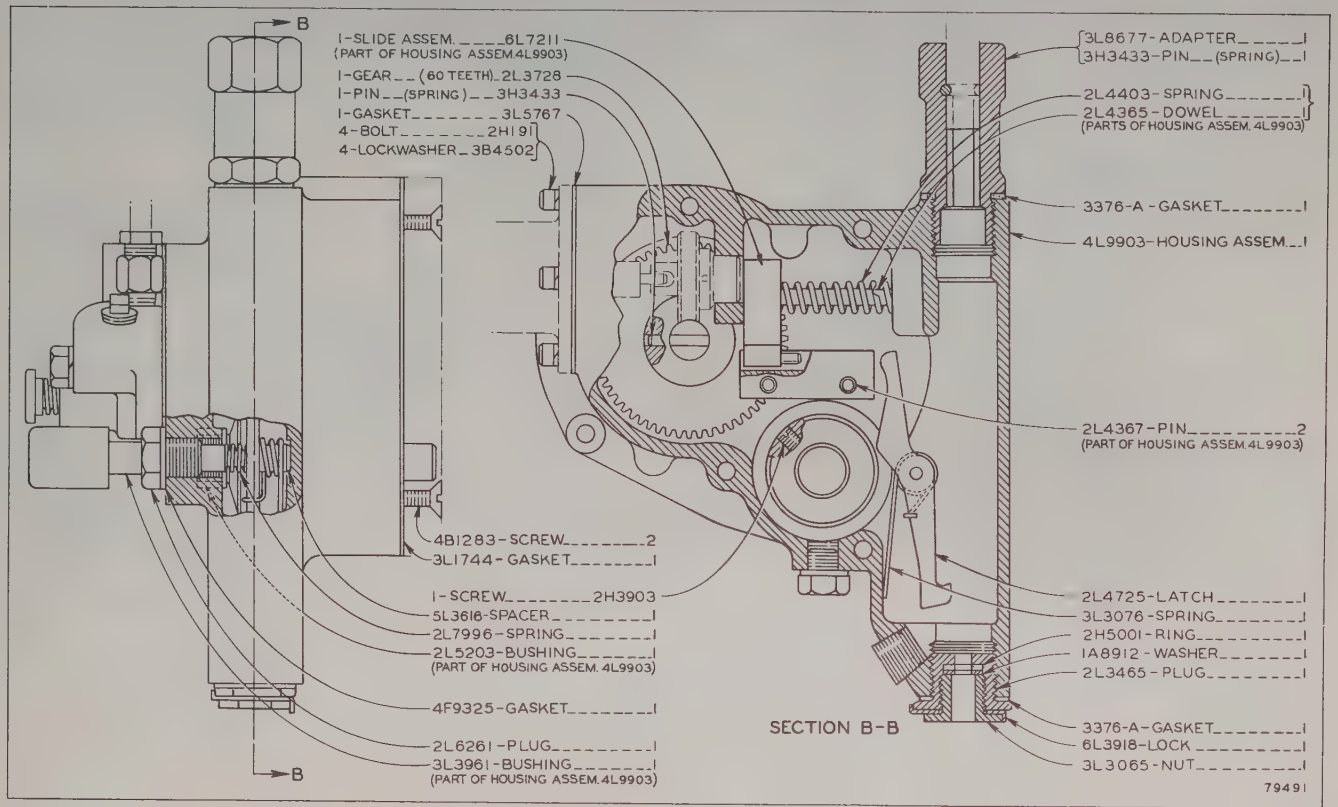

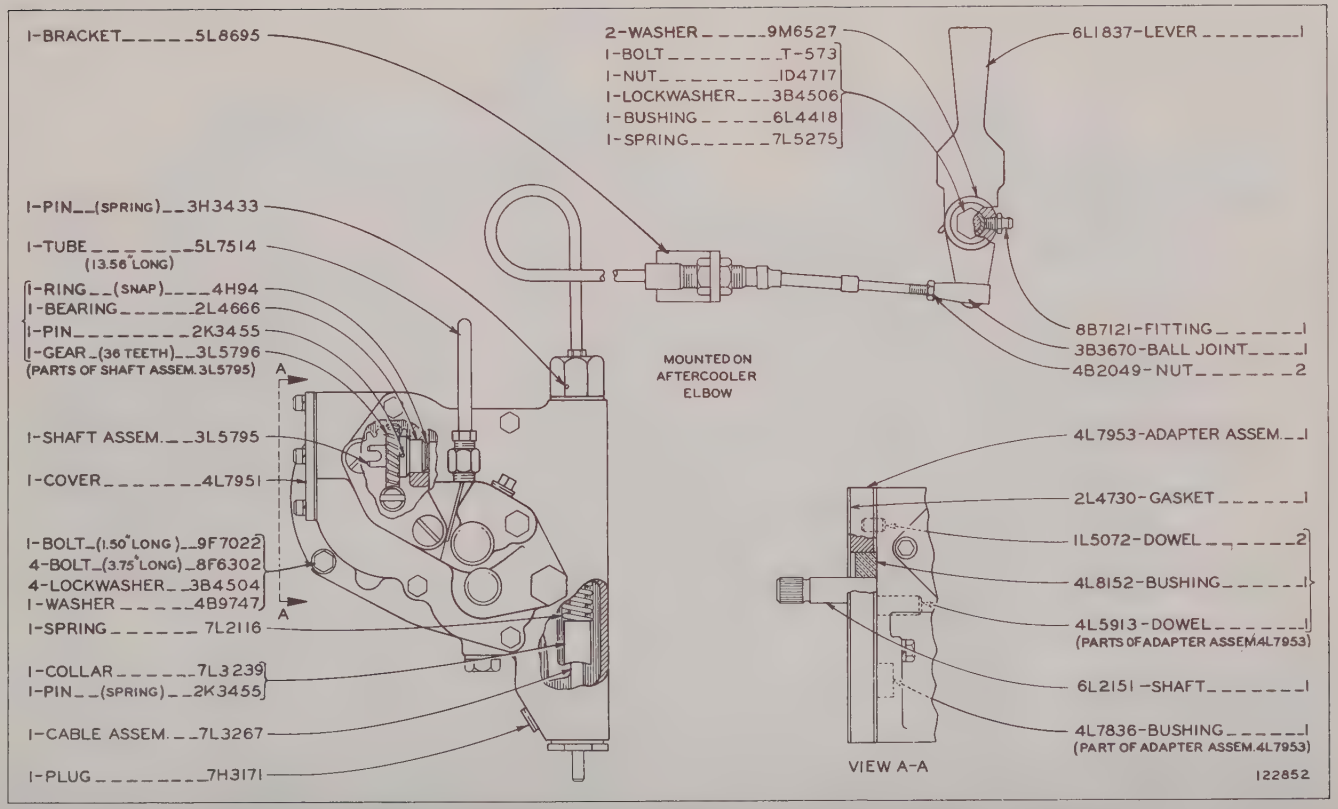

6L9237 SAFETY CONTROL SHUT-OFF GROUP--R.H. AND L.H.--PART 1 OF 3
EFFECTIVE WITH SERIAL NO. 68B1212-UP AND 76B207-UP

6L9237 SAFETY CONTROL SHUT-OFF GROUP—Sectional View of Housing—Part 2 of 3
Effective with Serial No. 68B1212-Up and 76B207-Up

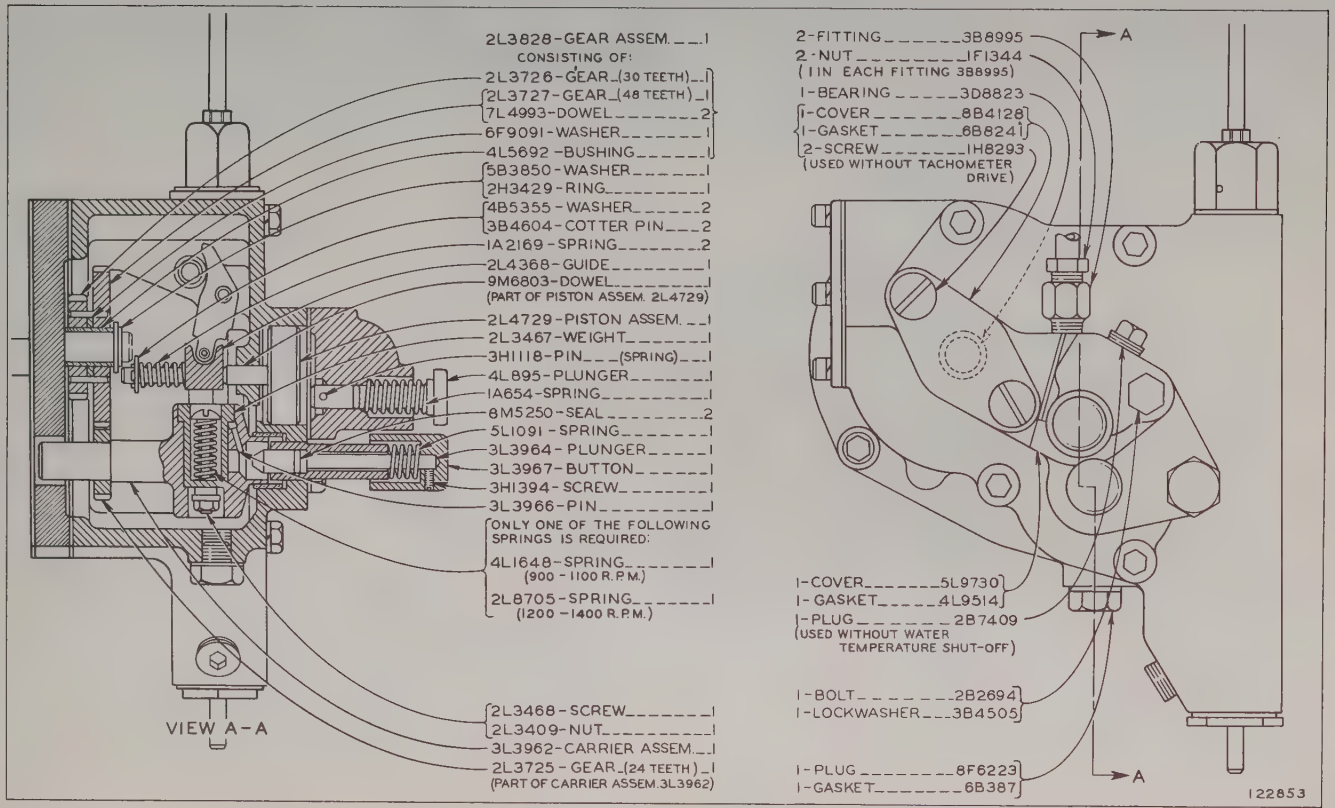

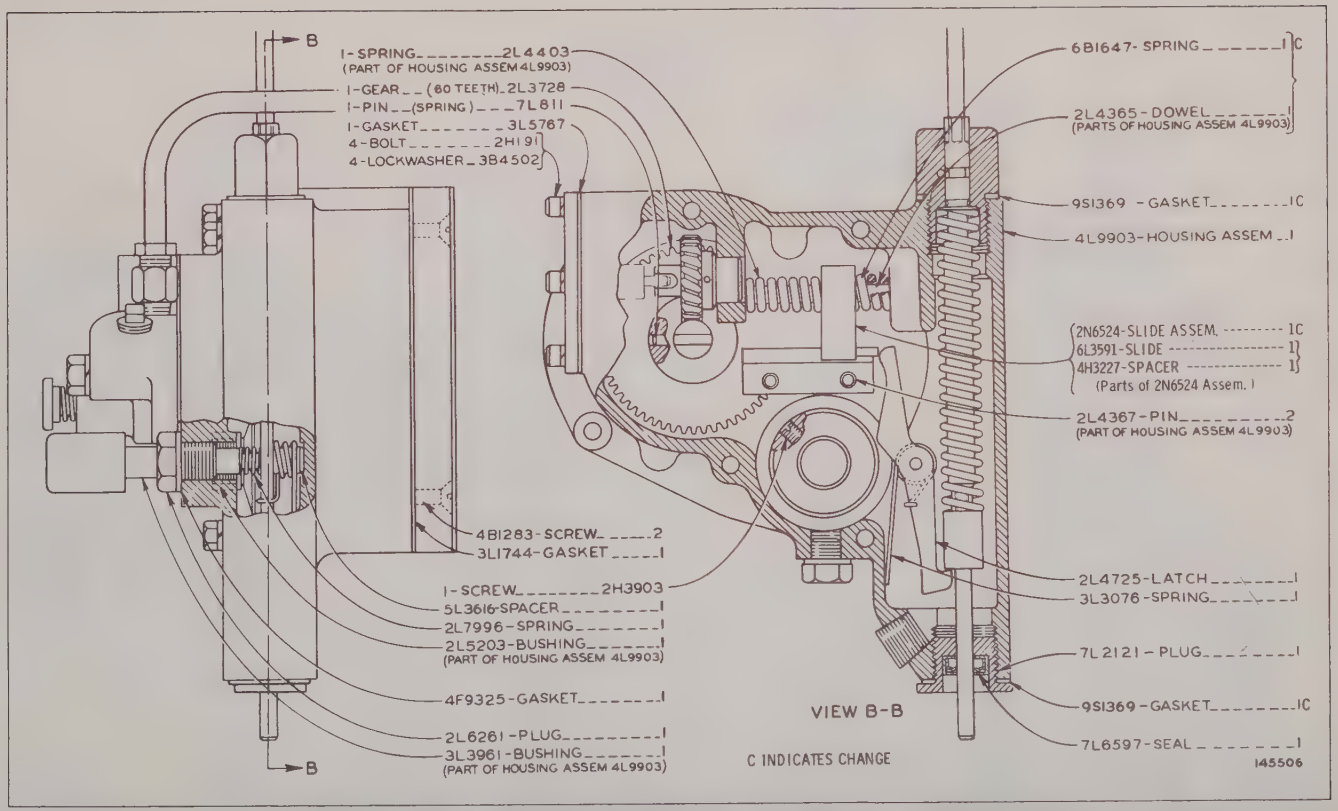

6L9237 SAFETY CONTROL SHUT-OFF GROUP—Sectional View of Housing—Part 3 of 3
Effective with Serial No. 68B1212-Up and 76B207-Up

6L9237 SAFETY CONTROL SHUT-OFF GROUP—R.H. and L.H.—Part 1 of 3—Type 2
Serial No. 68B1212—Up and 76B207—Up

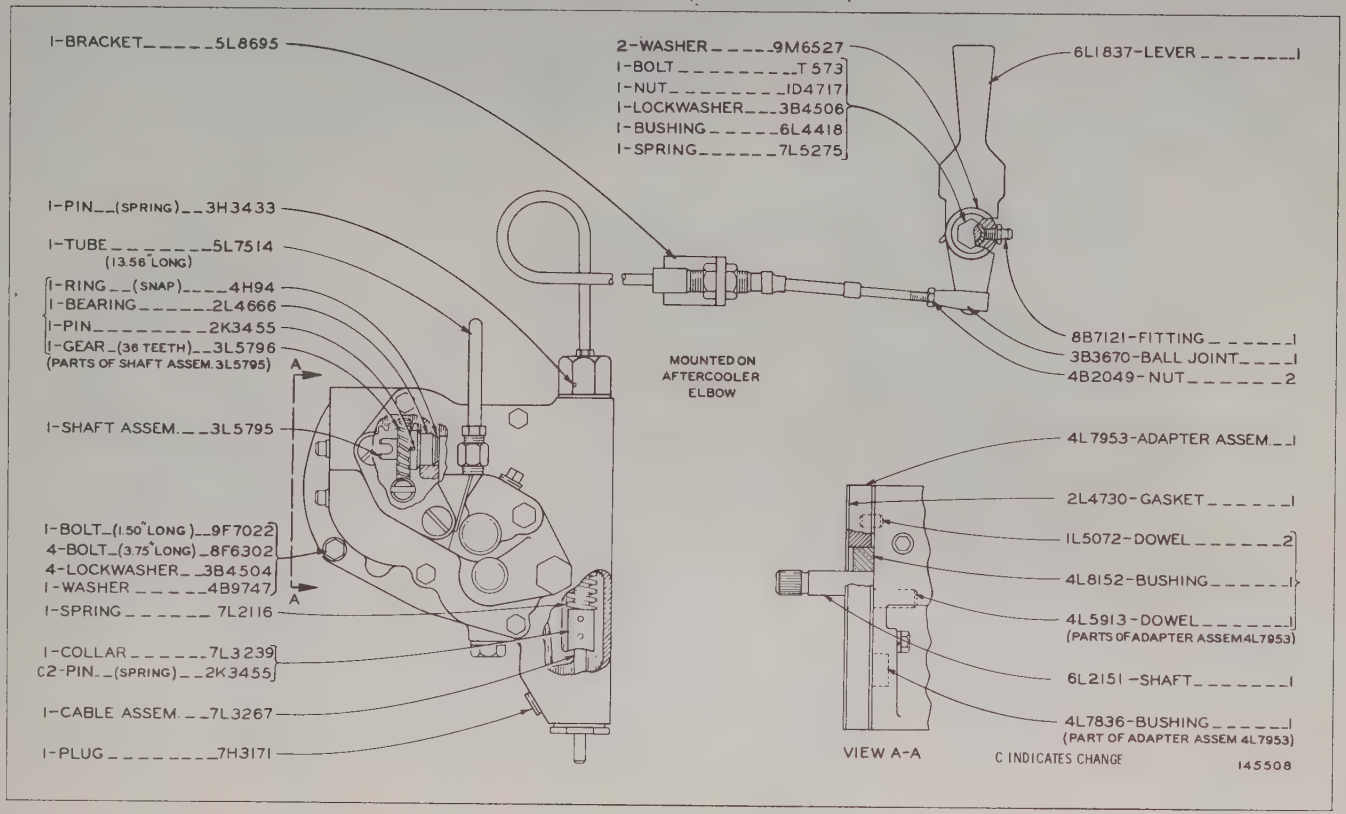

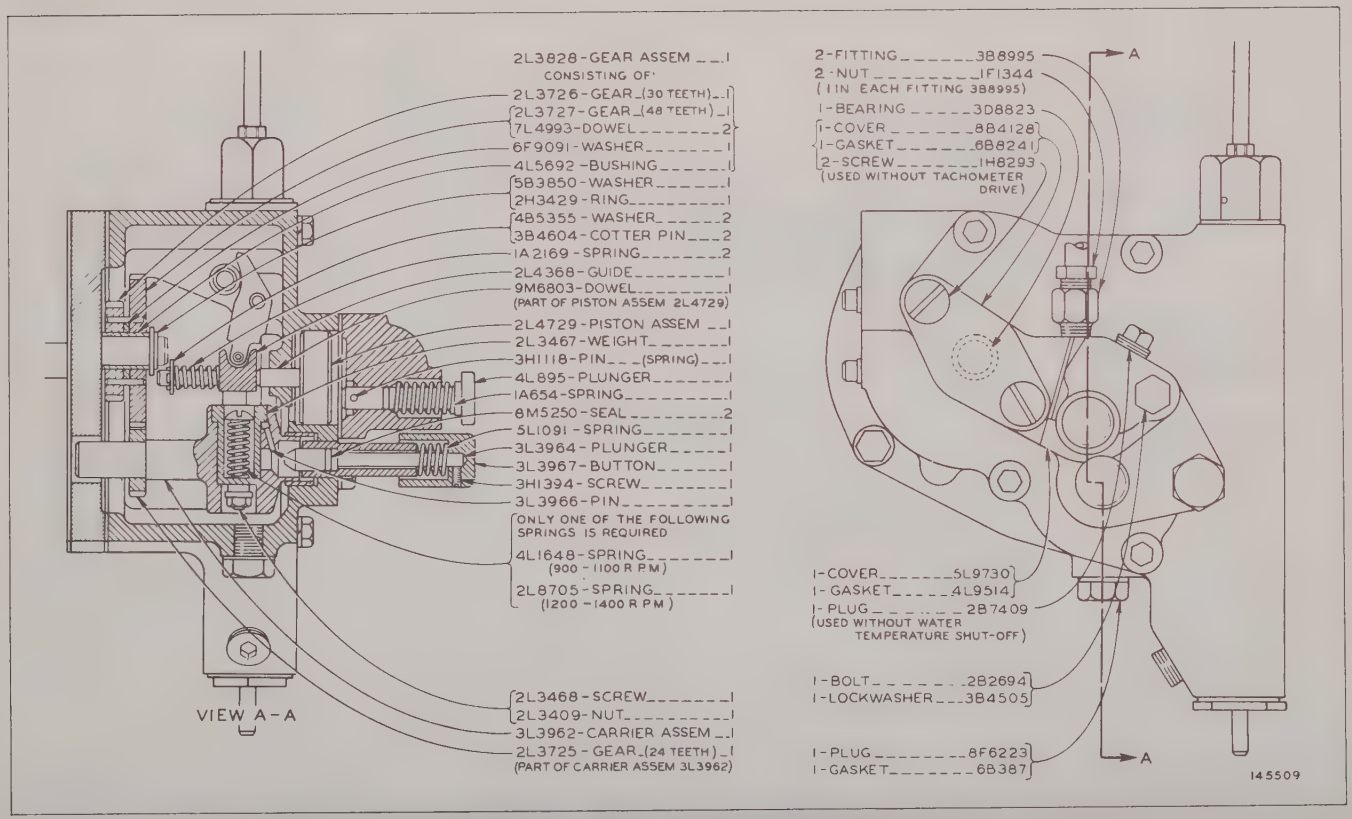

6L9237 SAFETY CONTROL SHUT-OFF GROUP—Sectional View of Housing—Part 2 of 3—Type 2
Serial No. 68B1212—Up and 76B207—Up

6L9237 SAFETY CONTROL SHUT-OFF GROUP—Sectional View of Housing—Part 3 of 3—Type 2
Serial No. 68B1212—Up and 76B207—Up

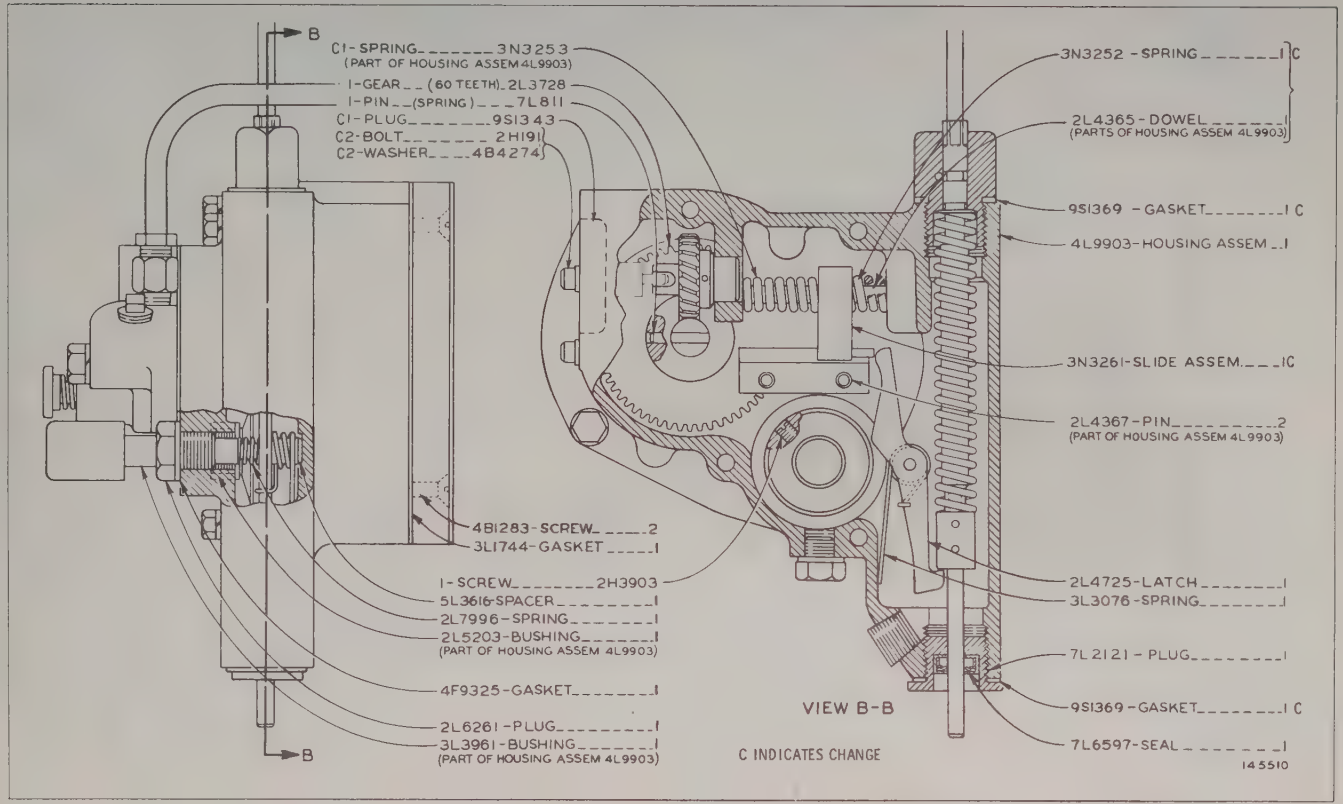

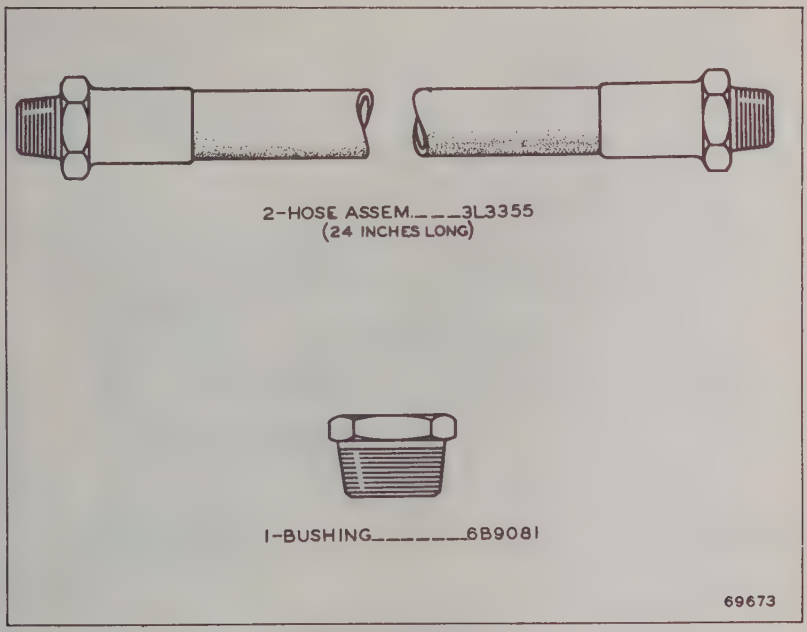

FLEXIBLE FUEL LINES

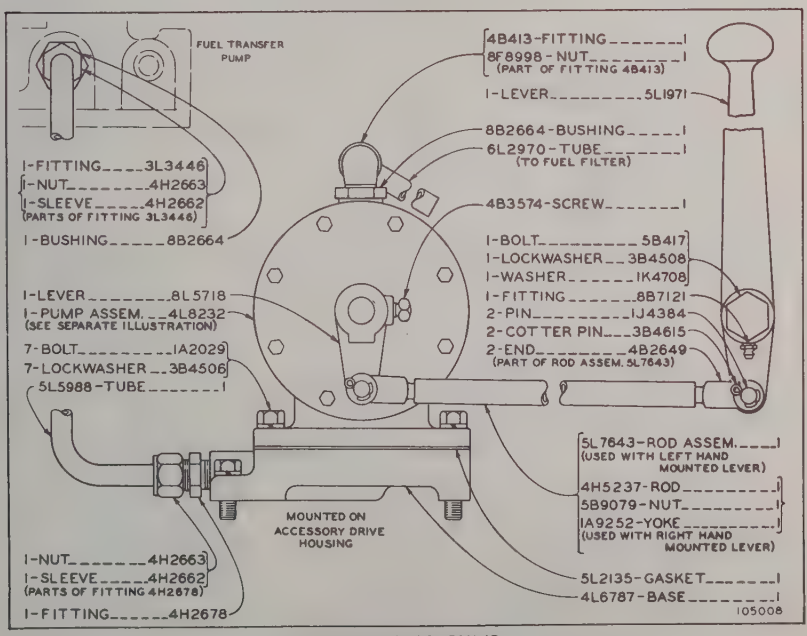

FUEL PRIMING PUMP

4L8232 Pump Assembly parts are shown on Page 72

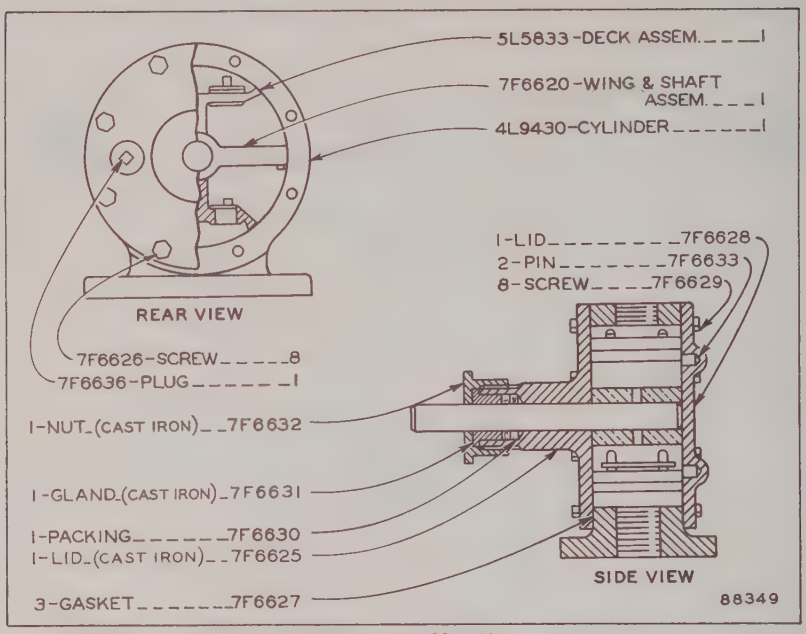

4L8232 PUMP ASSEMBLY
Serial No. 68B675 to 68B701 inclusive and 76B1 to 76B87 inclusive
Part of Fuel Priming Pump shown on Page 71

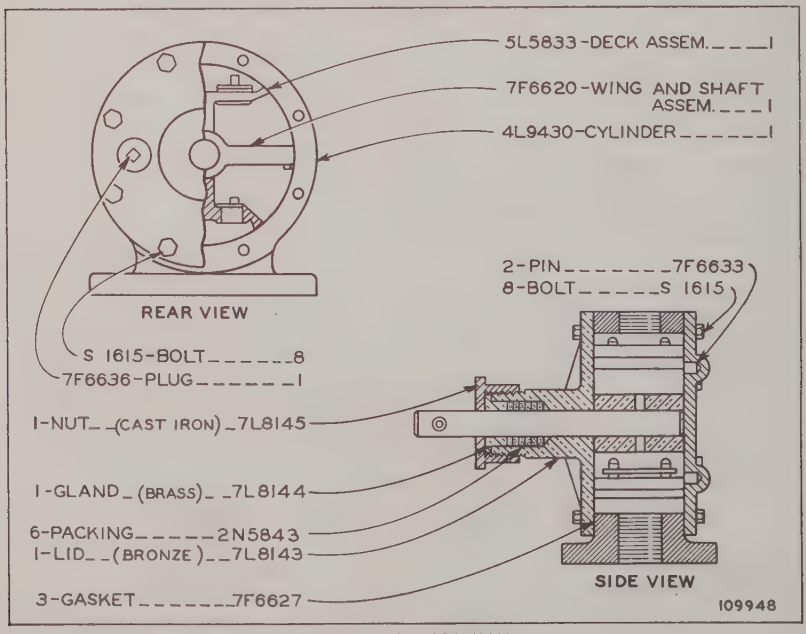

4L8232 PUMP ASSEMBLY
Effective with Serial No. 68B702—Up and 76B88—Up
Part of Fuel Priming Pump shown on Page 71

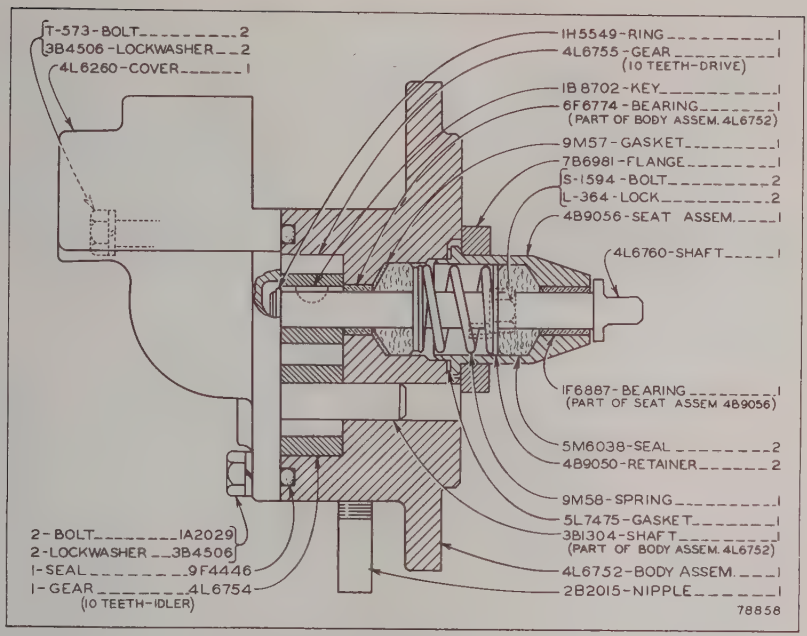

4L1156 FUEL TRANSFER PUMP GROUP
SERIAL NO. 68B675 TO 68B1075 AND 76B1 TO 76B147 INCLUSIVE

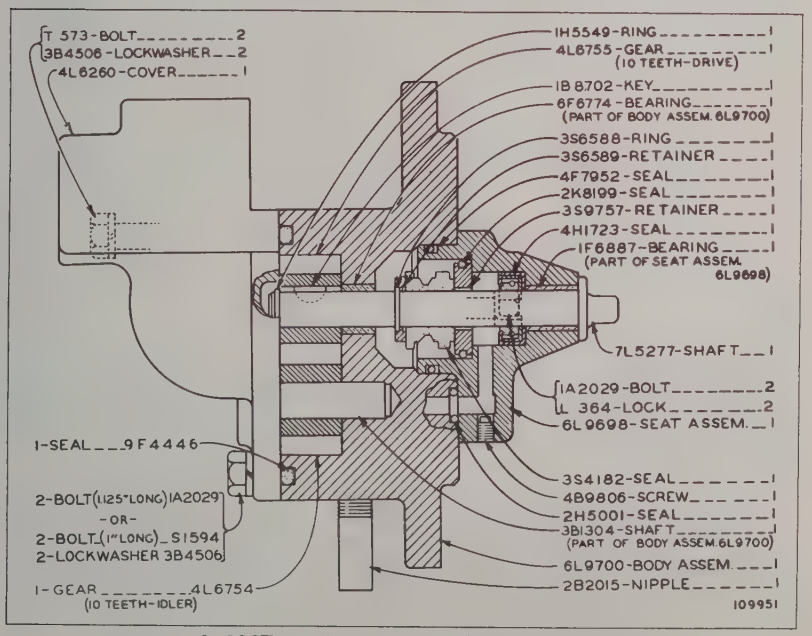

6L9697 FUEL TRANSFER PUMP GROUP
EFFECTIVE WITH SERIAL NO. 68B1076-UP AND 76B148-UP

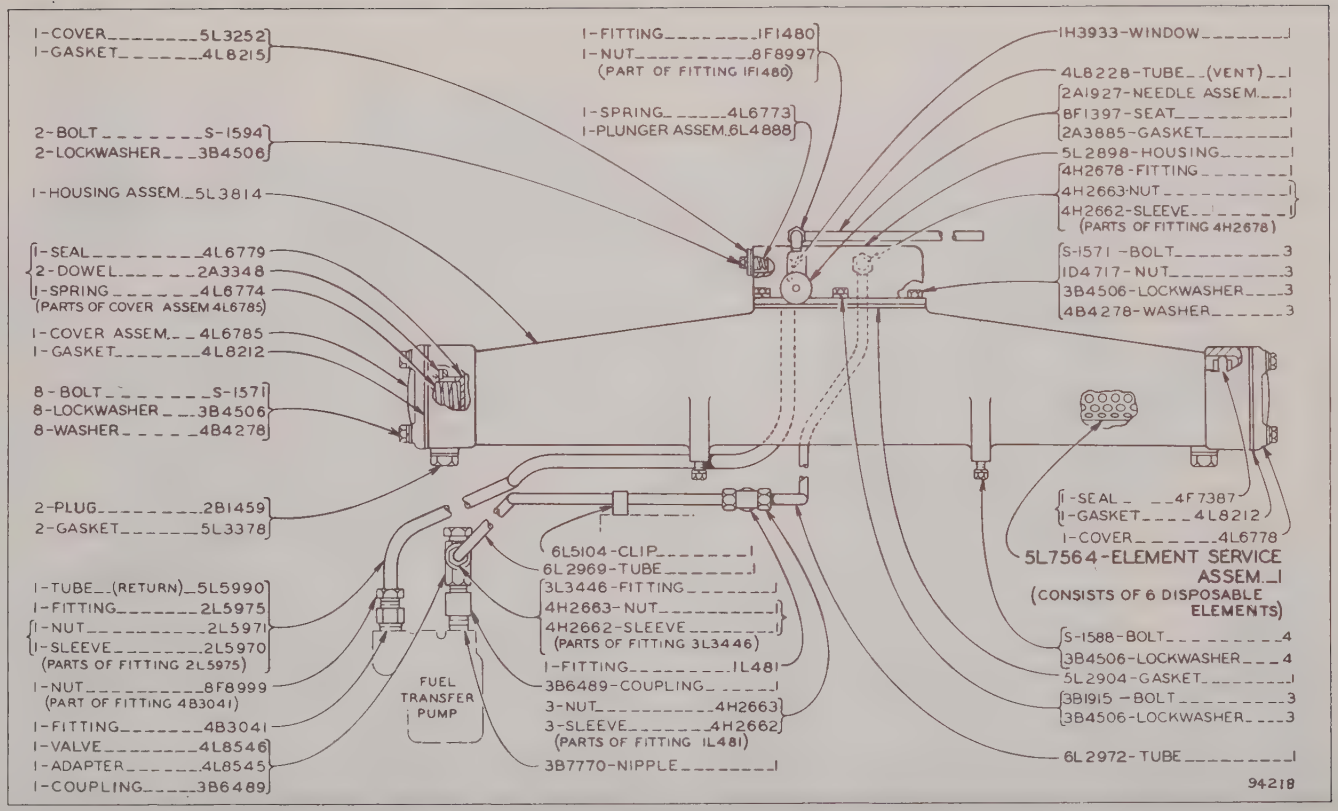

FUEL FILTER

SERIAL No. 68B675 TO 68B1213 INCLUSIVE AND 76B1 TO 76B209 INCLUSIVE

FUEL FILTER

Serial No. 68B1214 to 68B1278 inclusive and 76B210 to 76B281 inclusive

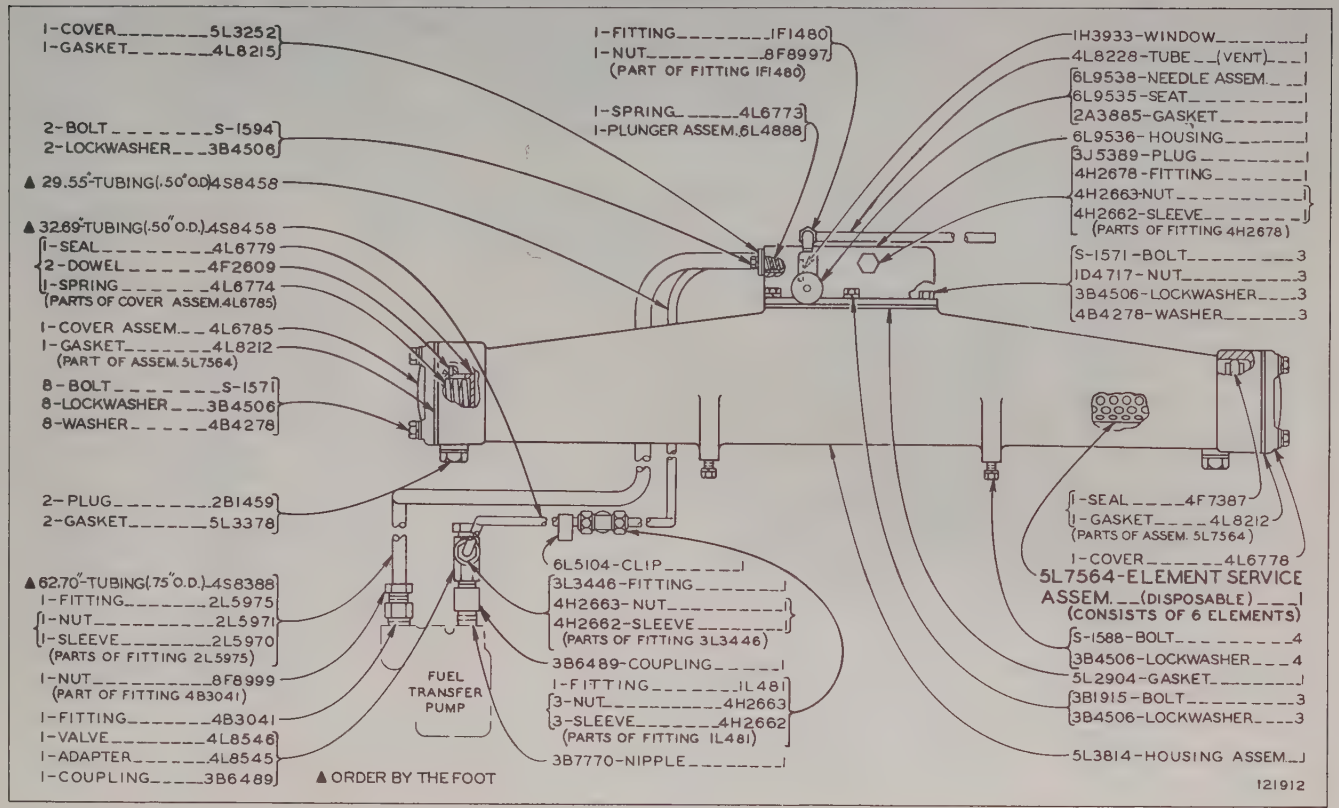

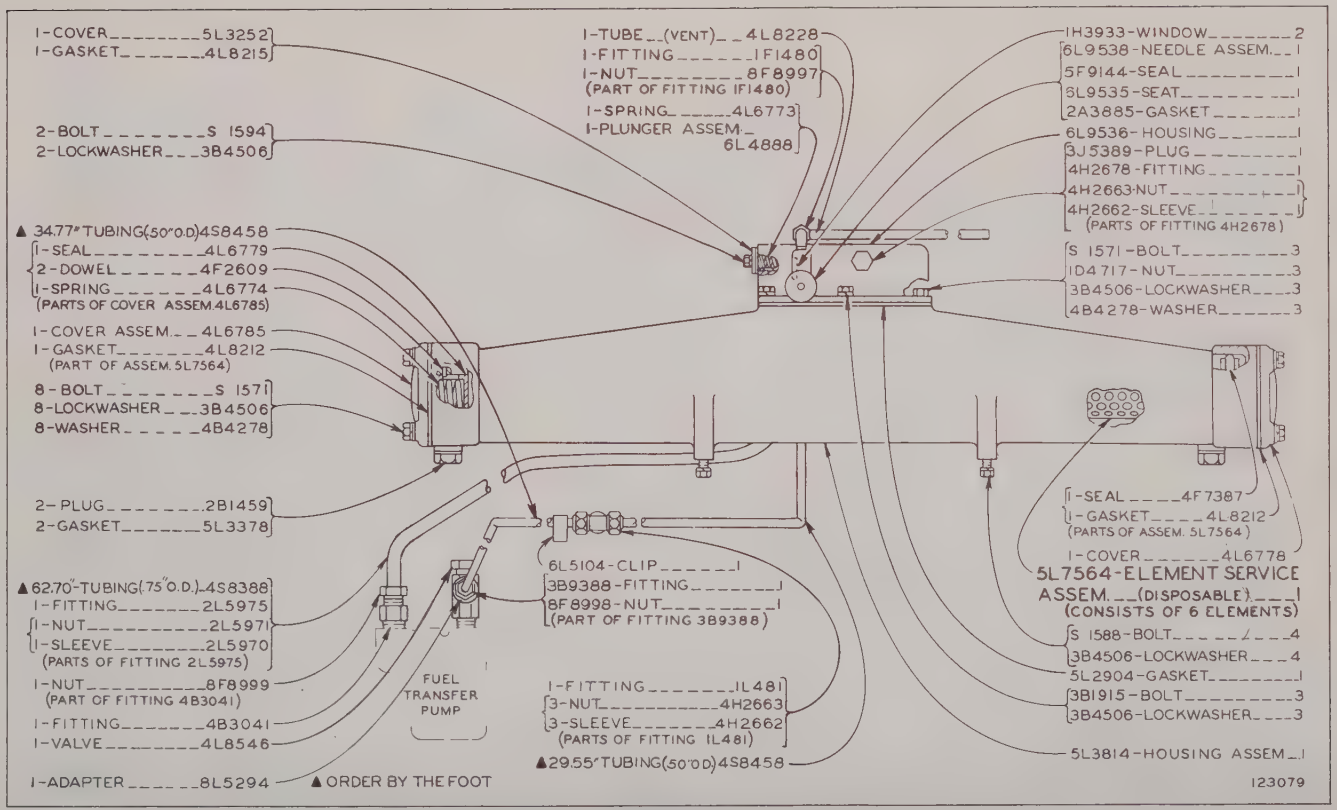

FUEL FILTER
Effective with Serial No. 68B1279-Up and 76B282-Up

FUEL PUMP HOUSING

Serial No. 68B675 to 68B773 inclusive and 76B1 to 76B87 inclusive

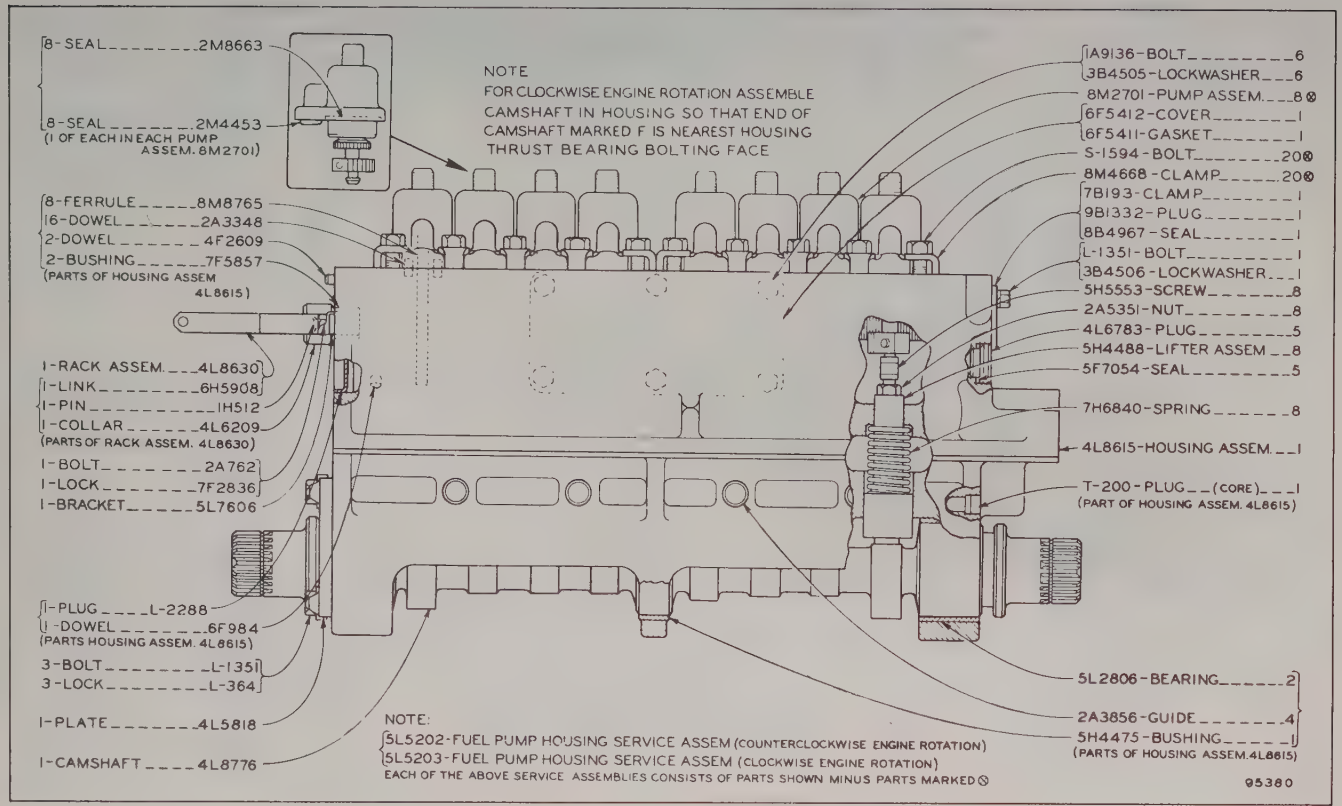

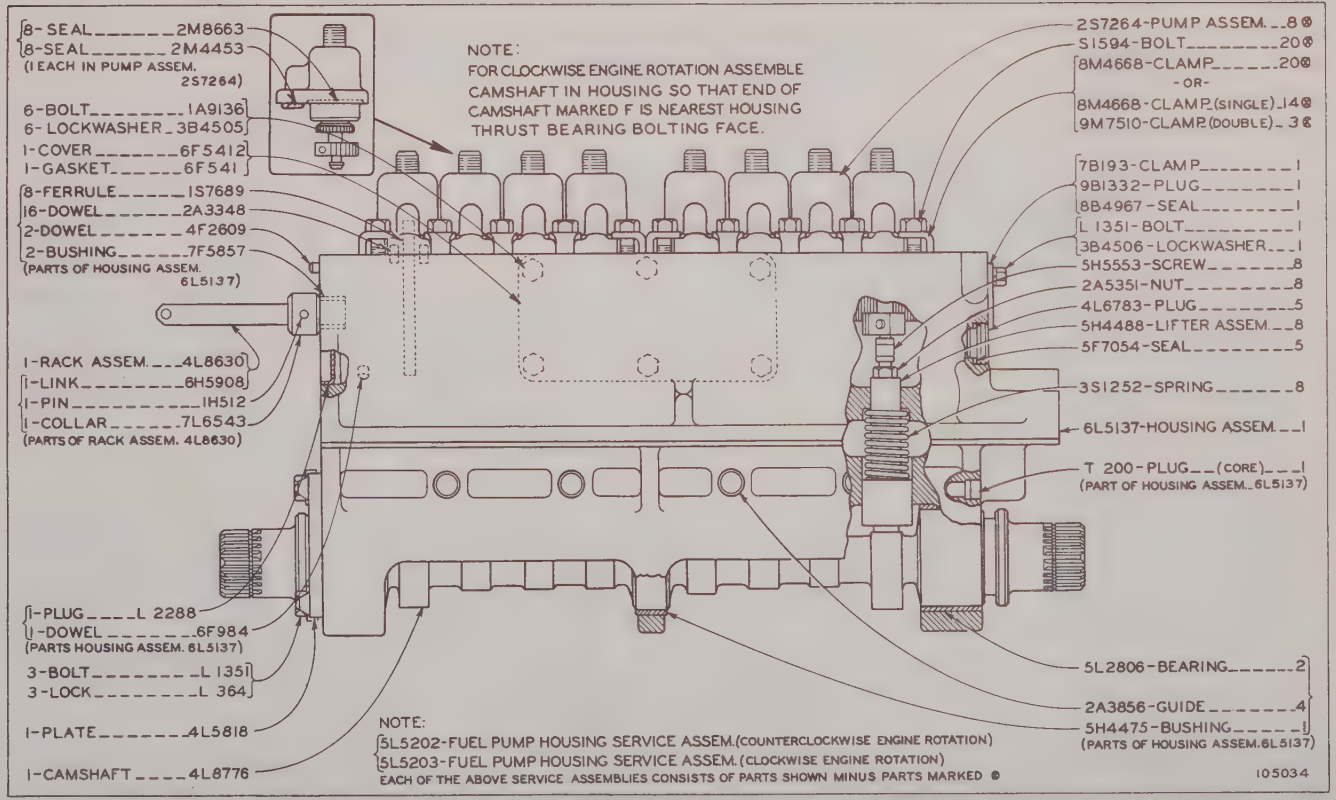

FUEL PUMP HOUSING

Effective with Serial No. 68B774—Up and 76B88—Up

FUEL INJECTION VALVES AND LINES

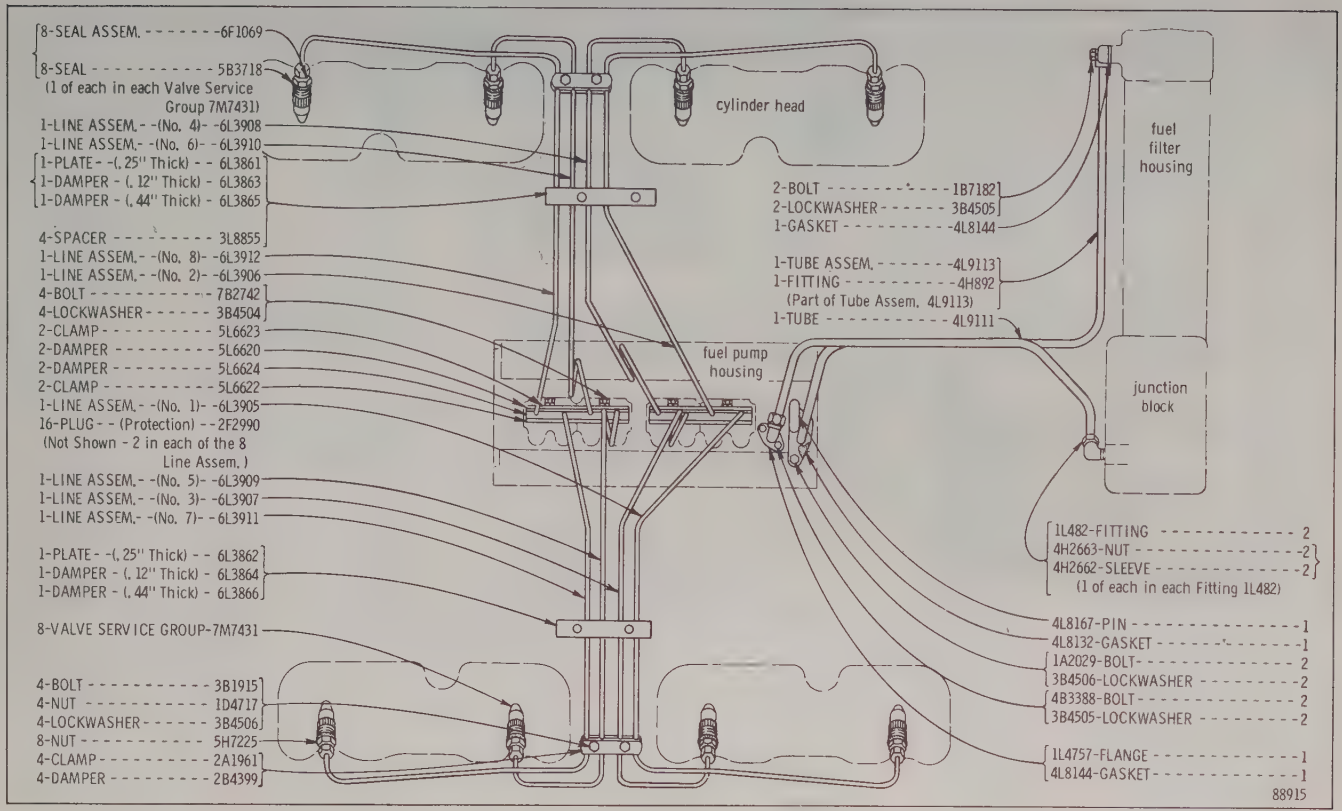

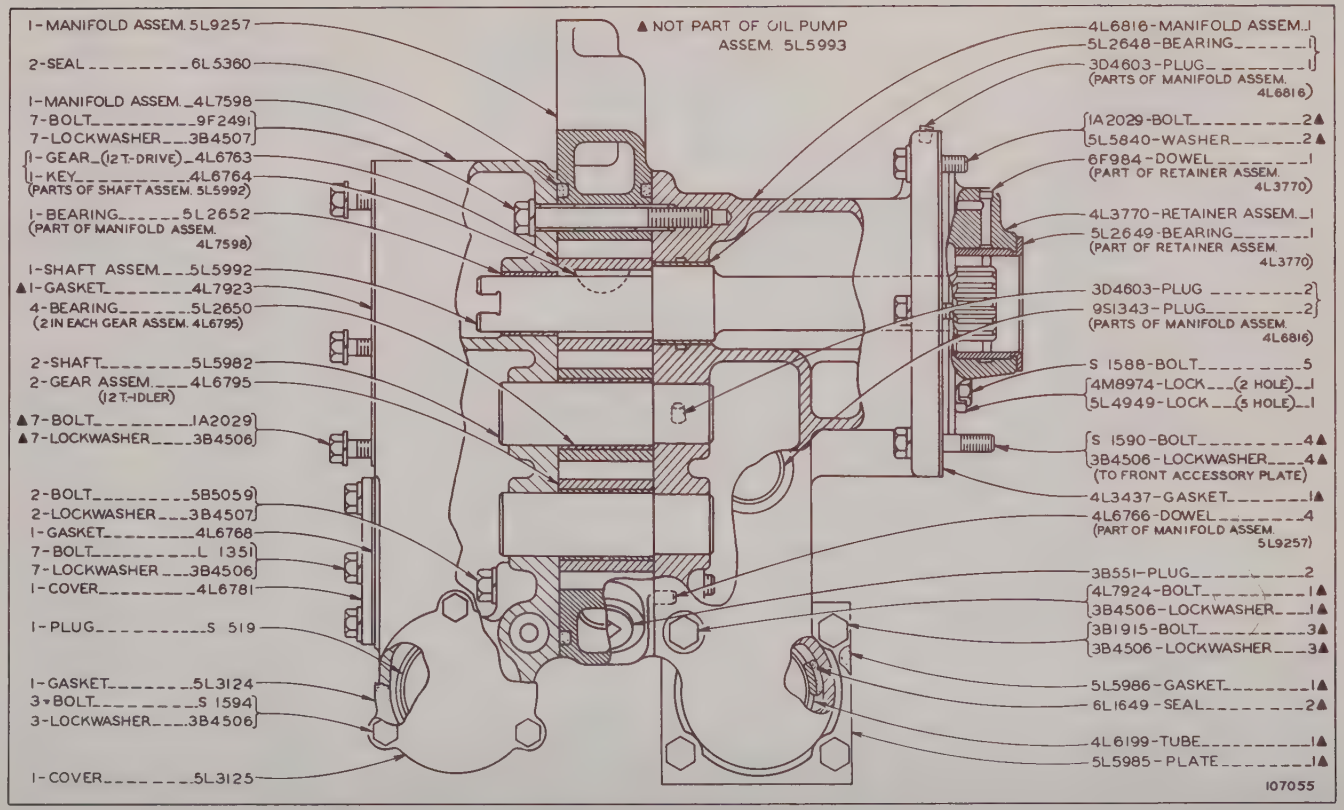

5L5993 OIL PUMP ASSEMBLY

6L1583 OIL FILTER GROUP

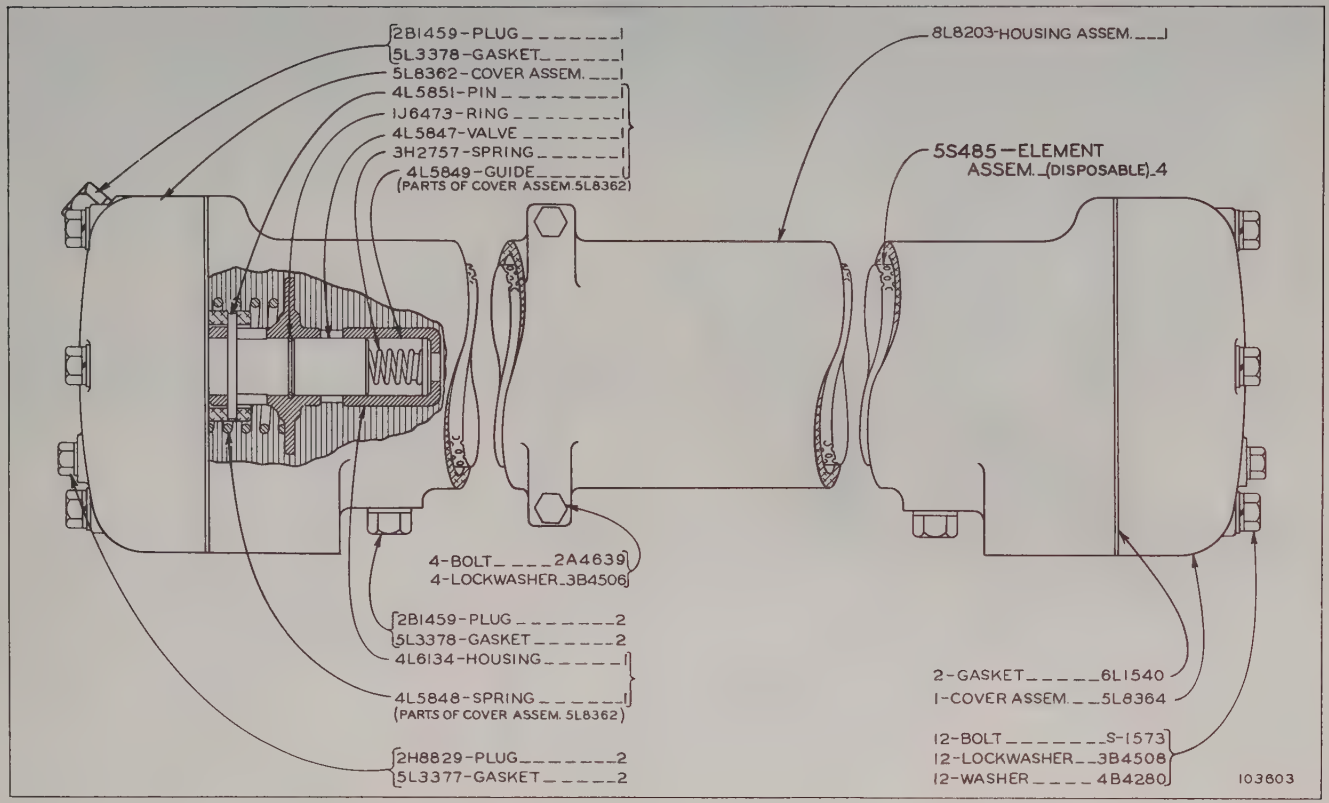

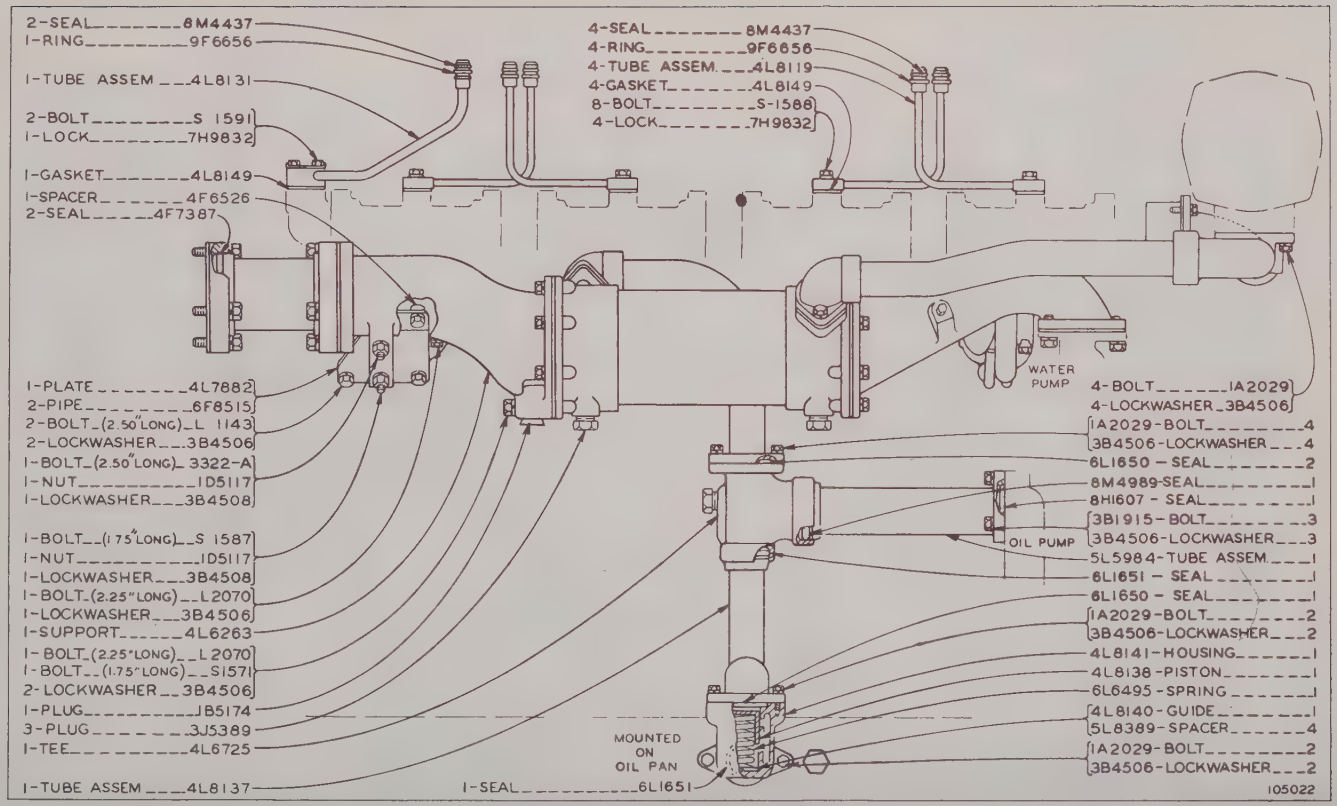

OIL COOLER AND LINES--PART 1

SERIAL NO. 68B675 TO 68B1063 INCLUSIVE AND 76B1 TO 76B144 INCLUSIVE

OIL COOLER AND LINES--PART 2

SERIAL No. 68B675 TO 68B1063 INCLUSIVE AND 76B1 TO 76B144 INCLUSIVE

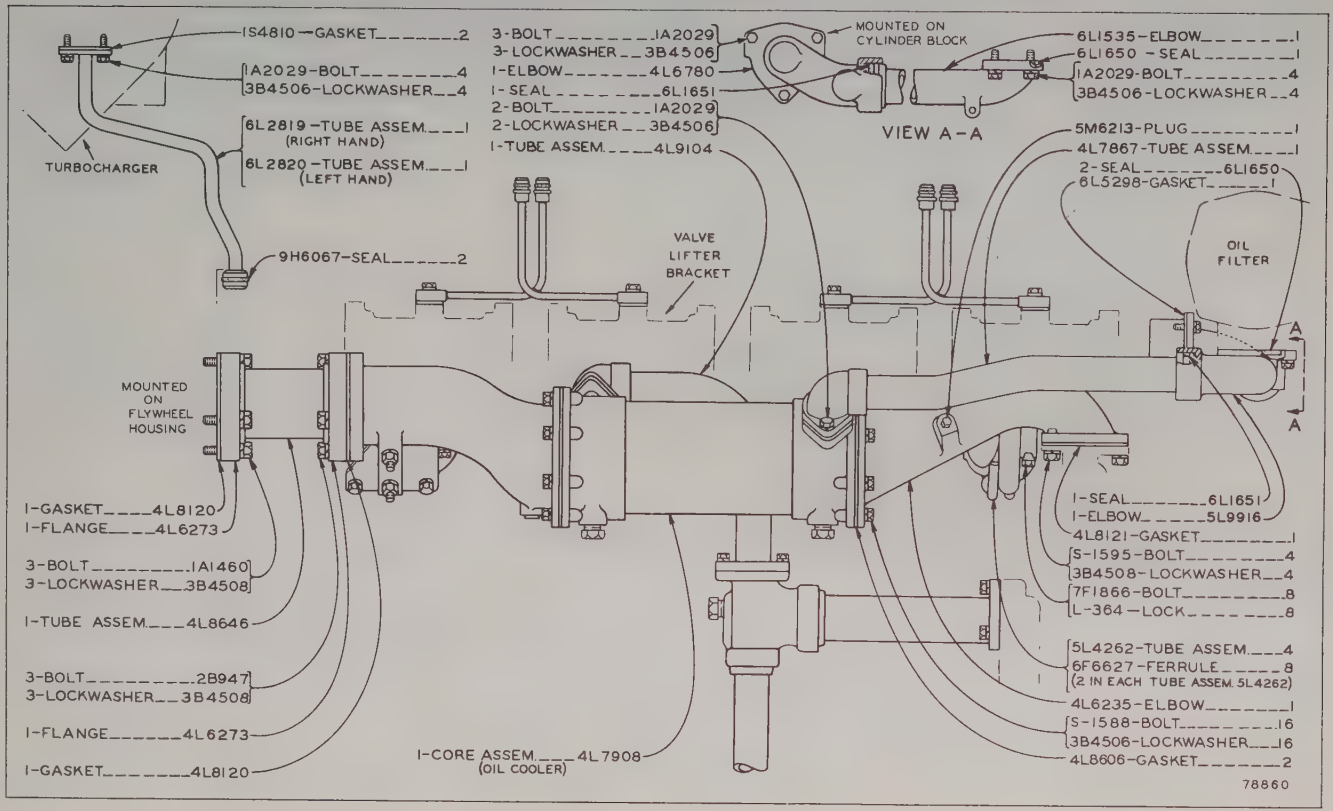

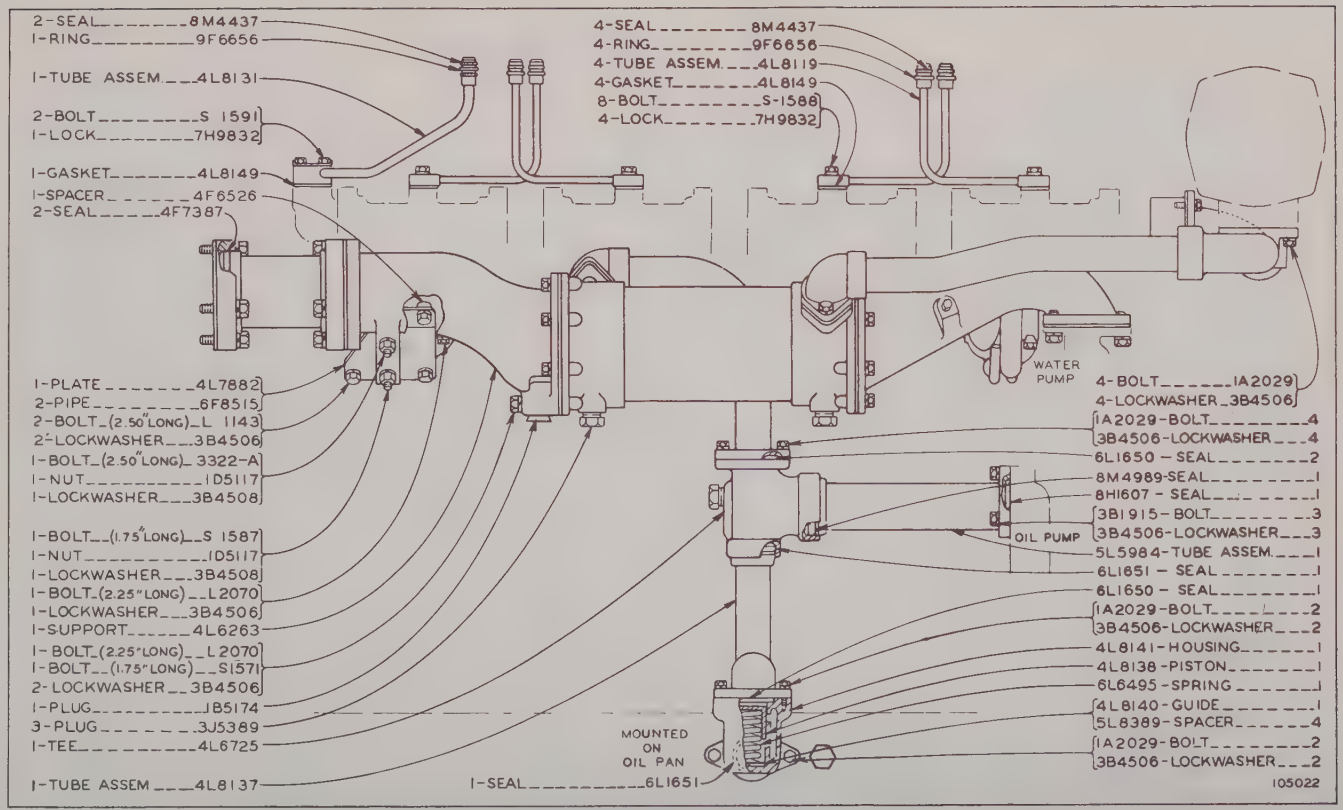

OIL COOLER AND LINES—Part 1
Serial No. 68B1064 to 68B1297 inclusive and 76B145 to 76B331 inclusive

OIL COOLER AND LINES—Part 2

Serial No. 68B1064 to 68B1297 inclusive and 76B145 to 76B331 inclusive

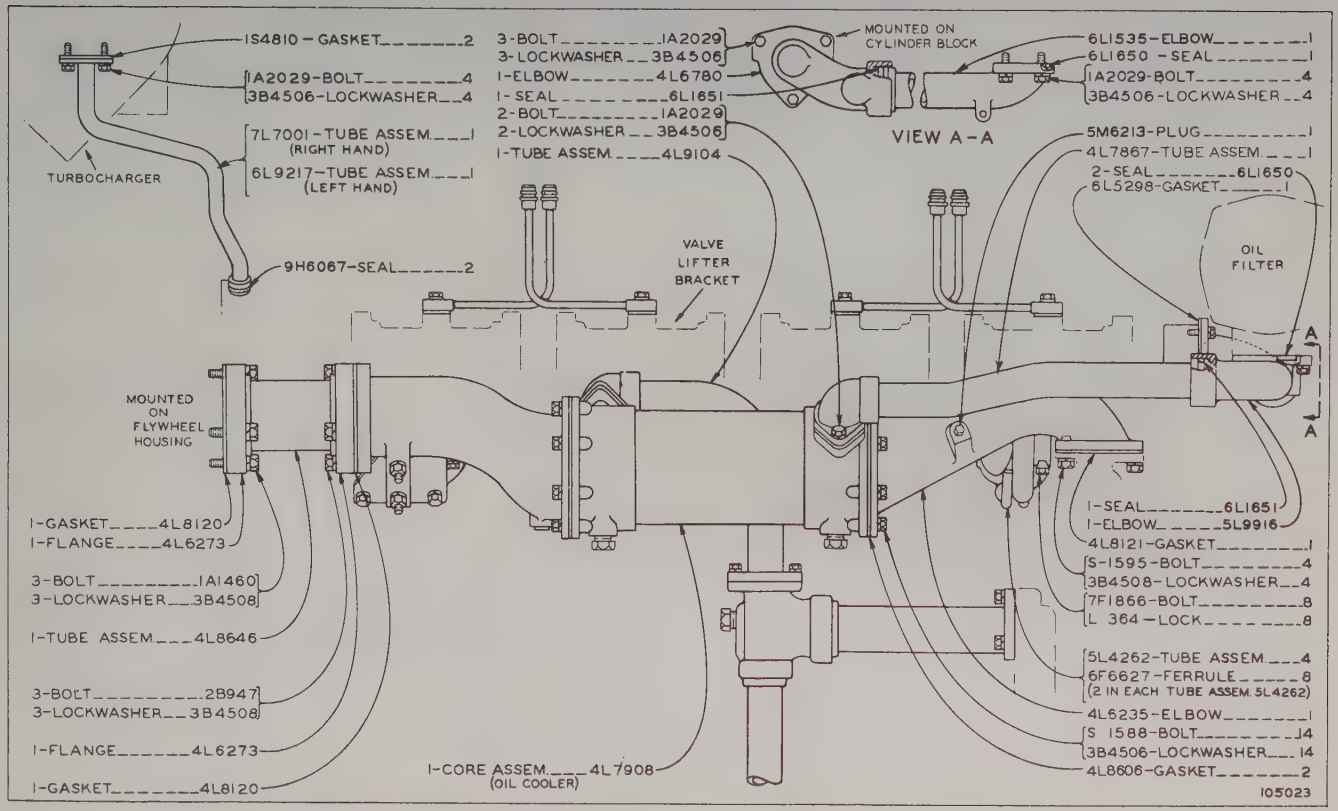

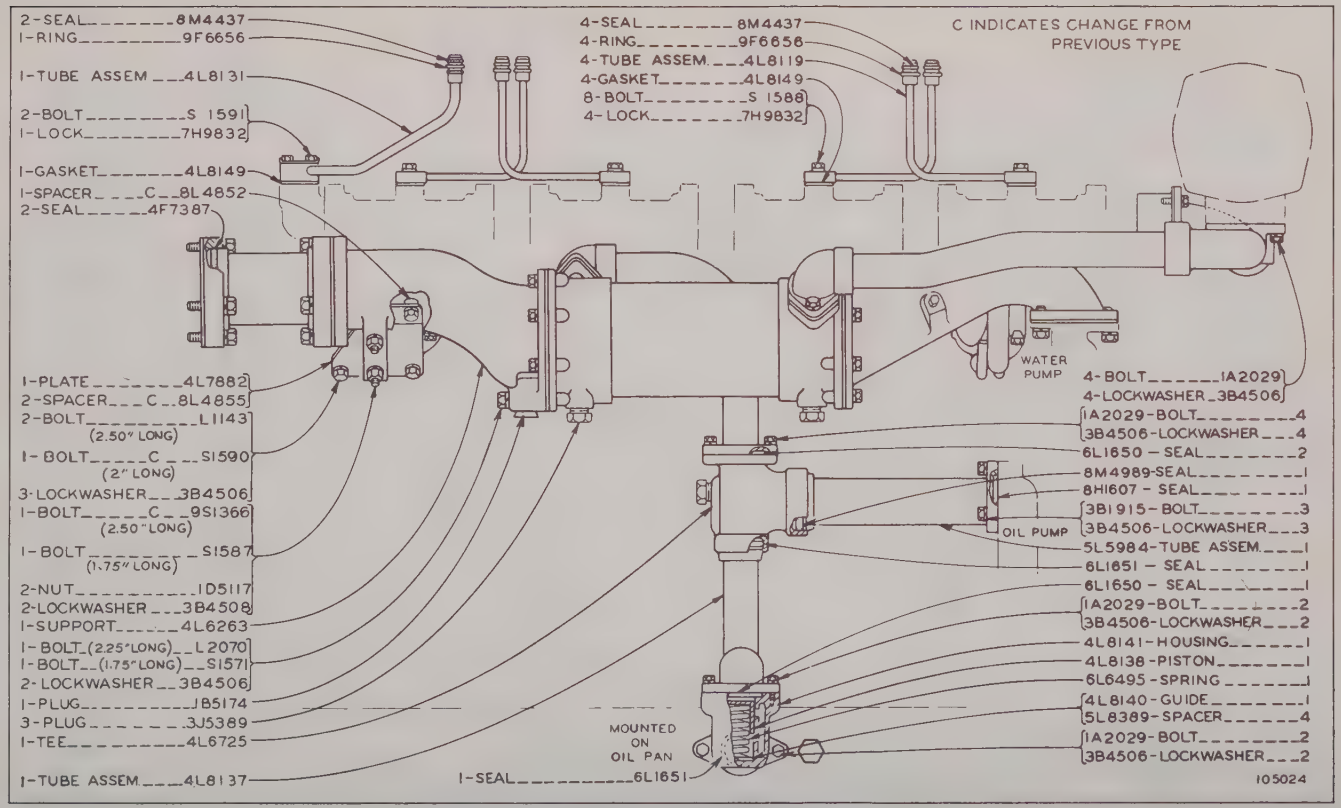

OIL COOLER AND LINES—Part 1
Effective with Serial No. 68B1298-Up and 76B332-Up

OIL COOLER AND LINES—Part 2
Effective with Serial No. 68B1298-Up and 76B332-Up

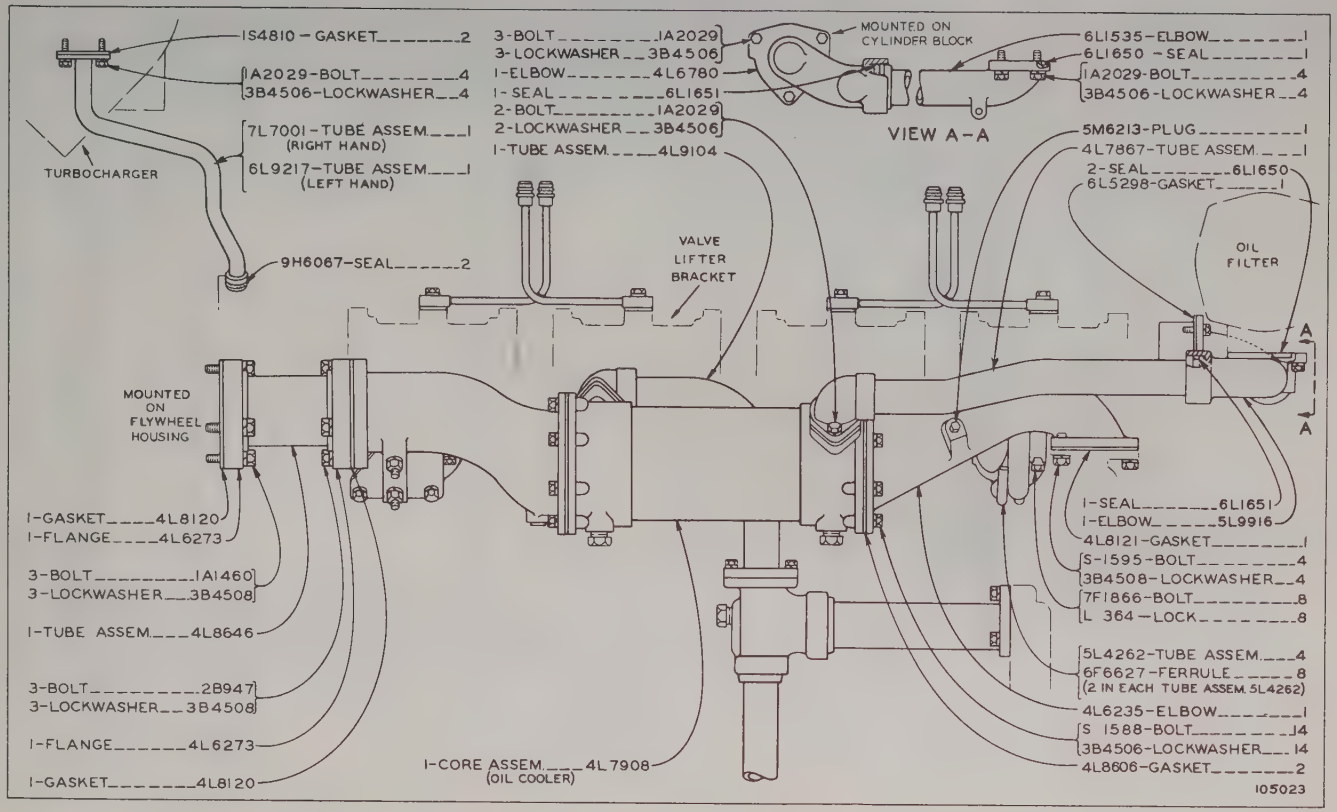

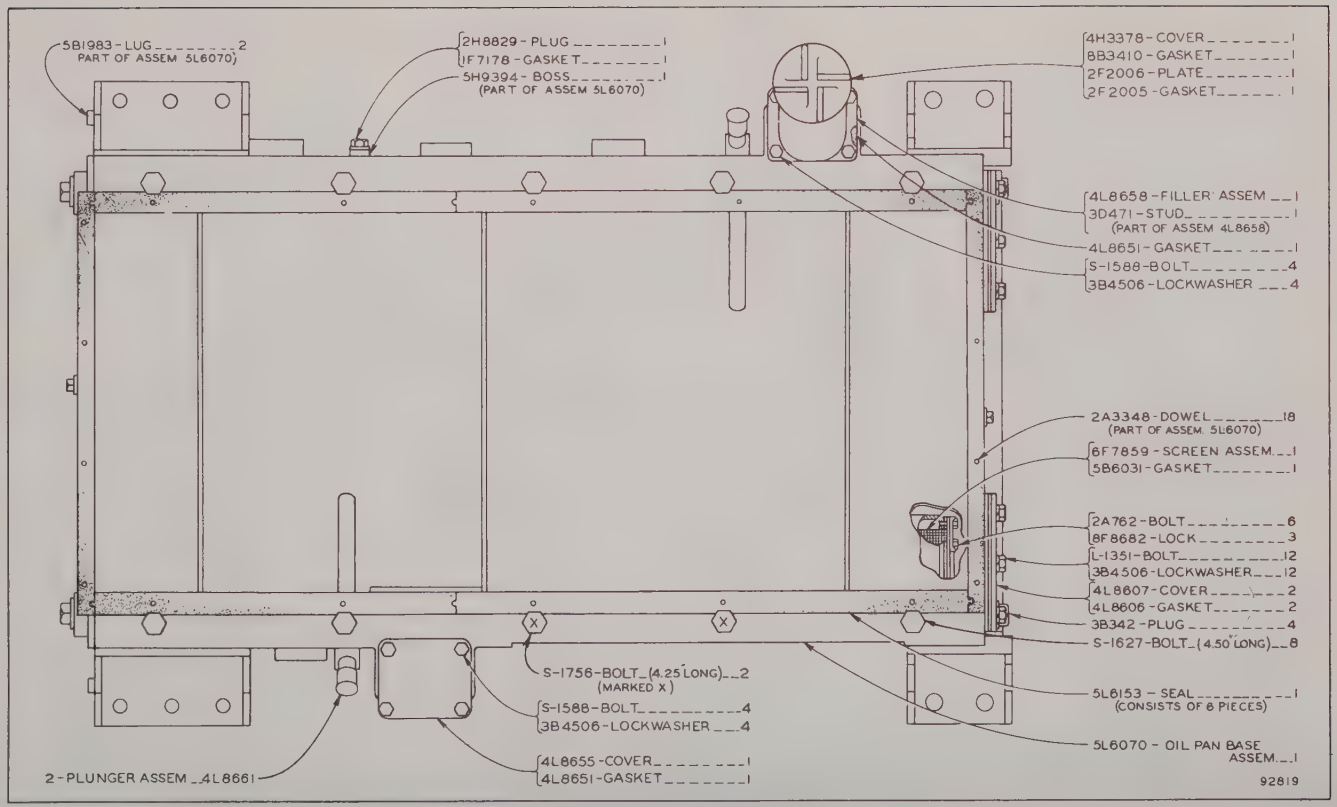

OIL PAN BASE

Serial No. 68B675 to 68B758 inclusive and 76B1 to 76B87 inclusive

OIL PAN BASE

Serial No. 68B759 to 68B840 inclusive and 76B88 to 76B100 inclusive

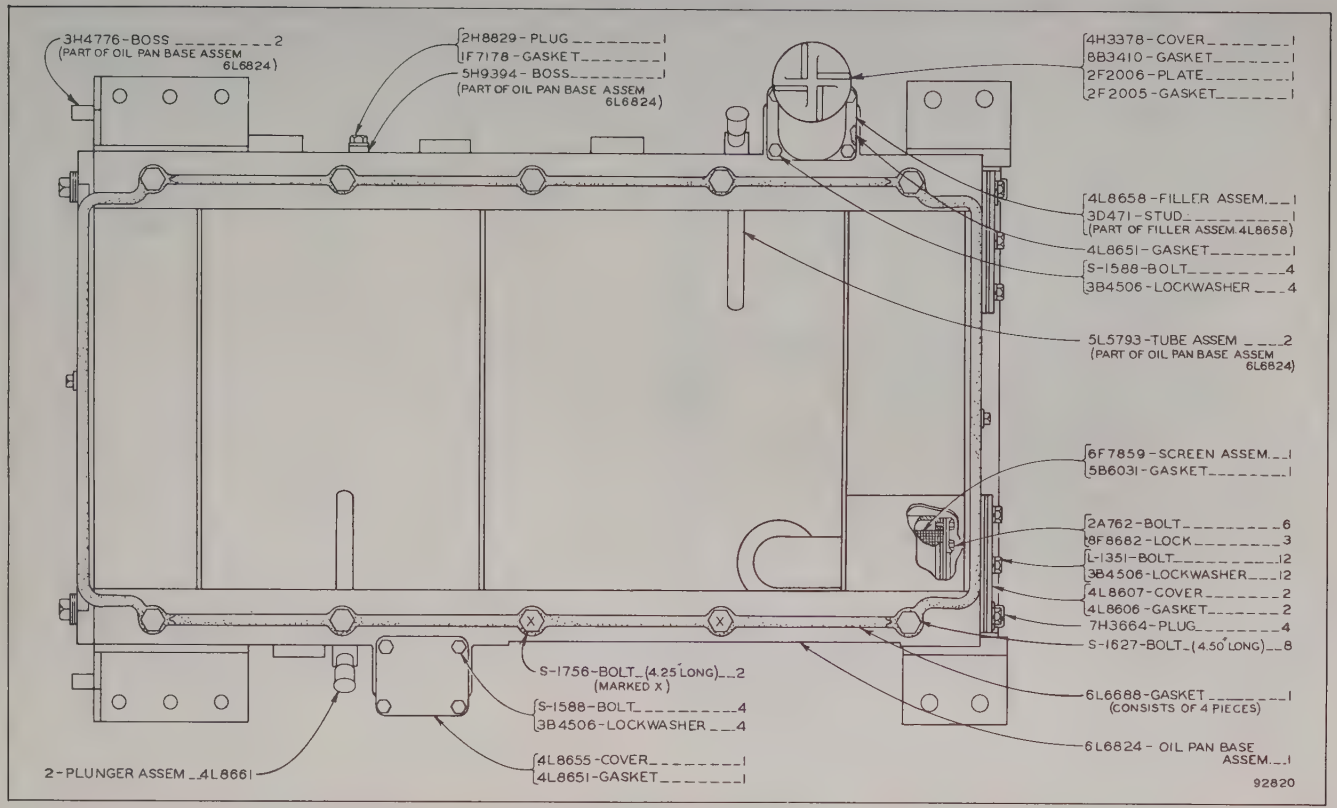

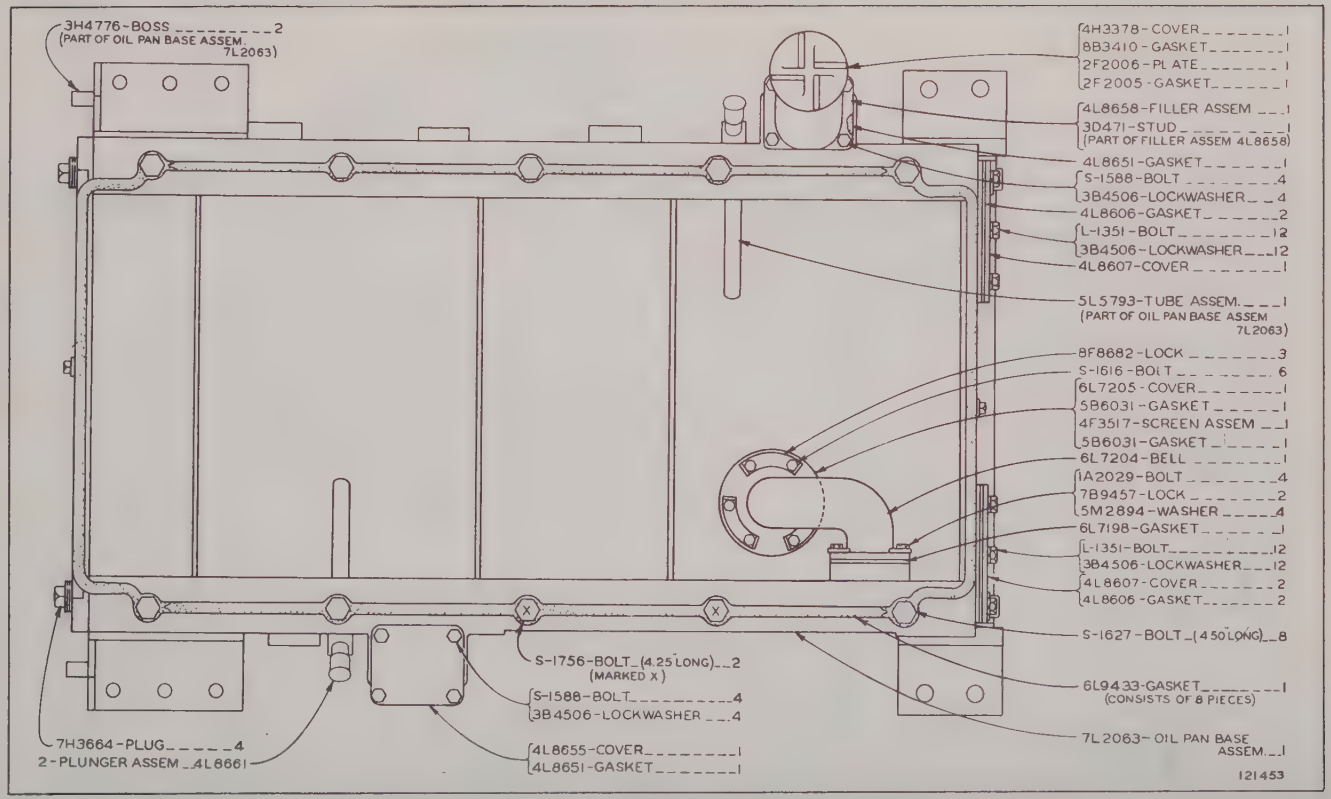

OIL PAN BASE
Effective with Serial No. 68B841—Up and 76B101—Up

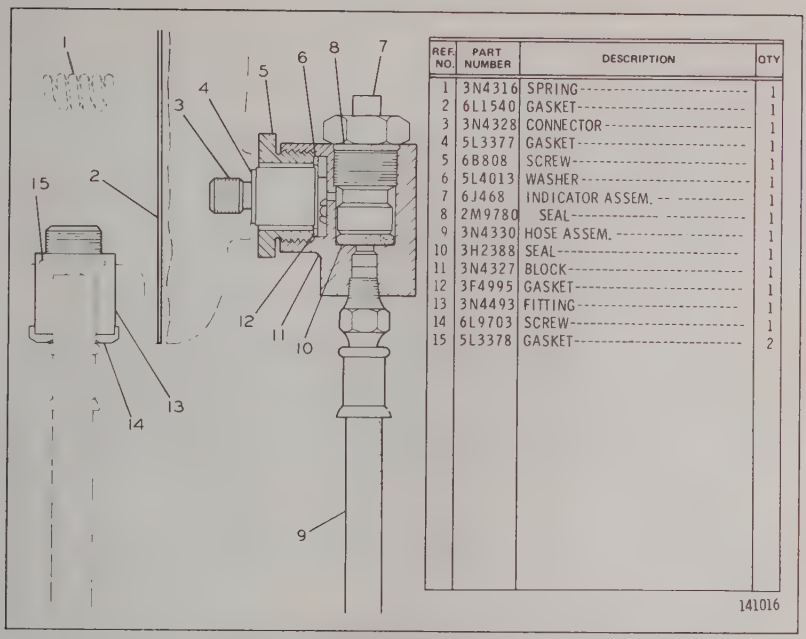

REF. NO.	PART NUMBER	DESCRIPTION	QTY
1	3N4316	SPRING	1
2	6L1540	GASKET	1
3	3N4328	CONNECTOR	1
4	5L3377	GASKET	1
5	6B808	SCREW	1
6	5L4013	WASHER	1
7	6J468	INDICATOR ASSEM.	1
8	2M9780	SEAL	1
9	3N4330	HOSE ASSEM.	1
10	3H2388	SEAL	1
11	3N4327	BLOCK	1
12	3F4995	GASKET	1
13	3N4493	FITTING	1
14	6L9703	SCREW	1
15	5L3378	GASKET	2

3N4631 OIL FILTER CHANGE INDICATOR GROUP—Field Installation
Serial No. 68B675 to 68B1615 inclusive

	Consists of:		Page
1	.....	Basic Starting Engine Arrangement	85
1	1L7470	Clutch Group	98
1	4L1147	Compression Release Control Group	92
1	6L2579	Fuel System Group	93
1	6L2586	Starting Engine Installation Group	86
1	6L2601	Water Lines Group	87
1	6L2668	Transmission and Starter Pinion Group	102
		— or —	
1	6L2669	Transmission and Starter Pinion Group	100

COMPLETE GASOLINE STARTING ENGINE ARRANGEMENT
Effective with Starting Engine Block No. F1270

	Consists of:		Page
1	.....	Camshaft and Governor	90
2	.....	Connecting Rod and Piston	91
1	.....	Crankshaft	91
1	.....	Cylinder Block, Cylinder Head and Valve Mechanism	88
1	4L4471	Ignition System Group	95
1	6L2529	Carburetor and Air Transfer Pipe Group	94
1	9M1713	Oil Pump Assembly	92
1	9M7894	Manual Starting Crank Group	104

BASIC STARTING ENGINE ARRANGEMENT
Effective with Starting Engine Block No. F1270
Part of Complete Gasoline Starting Engine Arrangement

Consists of:

4	1A2029	Bolt—Upper Rear Bracket to Bracket
1	1A5822	Bolt—Strap to Manifold
1	1B3057	Clip—Fuel Tube
8	1B4203	Nut—Exhaust Pipe and Bracket to Block
4	1B4330	Nut—Air Cleaner Adapter to Pipe Assembly
1	2B9815	Gasket—Adapter to Pipe Assembly
4	3B4504	Lockwasher—1/4"
14	3B4506	Lockwasher—3/8"
12	3B4508	Lockwasher—1/2"
3	3B4510	Lockwasher—5/8"
4	4B1282	Screw—Air Cleaner Adapter to Pipe Assembly
3	4B4278	Washer—Upper Rear Bracket to Bracket
15	4B4280	Washer—17/32"
1	5B494	Grommet—Clip to Tube
4	1D4717	Nut—Upper Rear Bracket to Bracket
2	6F7030	Bolt—Bracket Assembly to Tank
1	3H761	Cover—Flywheel Housing Electric Starting Engine
4	2L810	Shim
2	2L889	Shim
2	3L6836	Spacer—Bracket to Diesel Water Passage Cover
15	3L7043	Shim—Front Support
1	5L2210	Support—Starting Engine—Front
1	5L2211	Support—Lower Rear
2	5L4194	Spacer—Main Bearing Studs to Nuts
1	5L5802	Plate—Air Cleaner to Pipe Assembly
1	5L7619	Bracket—Starting Engine Mounting—Rear
3	5L7711	Shim—Rear Support to Diesel Oil Pan
1	6L2578	Tube Assembly—Exhaust Pipe
1	6L2604	Elbow Assembly—Manifold Water Effective with Serial No. 68B675
		— or —
1	6L3338	Connector Assembly—Manifold Water Effective with Serial No. 76B1
1	6L2795	Bracket—Starting Engine—Upper Rear
1	6L2796	Support—Starting Engine—Front
1	6L5675	Bracket Assembly—Clutch Housing to Fuel Tank
1	6L9647	Strap—Exhaust Pipe to Intake Manifold
1	7M7072	Case Assembly—Air Cleaner
1	8M2325	Clamp—Tube to Tube
1	8M3120	Element—Air Cleaner
1	8M3271	Hand Crank Assembly
2	8M4418	Gasket—Stg. Eng. Block to Exhaust Pipe & Bracket
1	9M6475	Tube—72" Long—Starting Engine Fuel
		— or —
1	6L5979	Tube—28" Long—Tank to Carburetor
2	L-2070	Bolt—Bracket to Diesel Water Passage Cover
8	S-1587	Bolt—Supports to Oil Pan & Support to Stg. Eng.
4	S-1595	Bolt
3	S-1608	Bolt—Support to Stg. Eng. Timing Gear Housing
3	S-1624	Bolt—Electric Starting Flange Cover

6L2586 STARTING ENGINE INSTALLATION GROUP
Effective with Starting Engine Block No. F1270
Part of Complete Gasoline Starting Engine Arrangement listed on Page 85

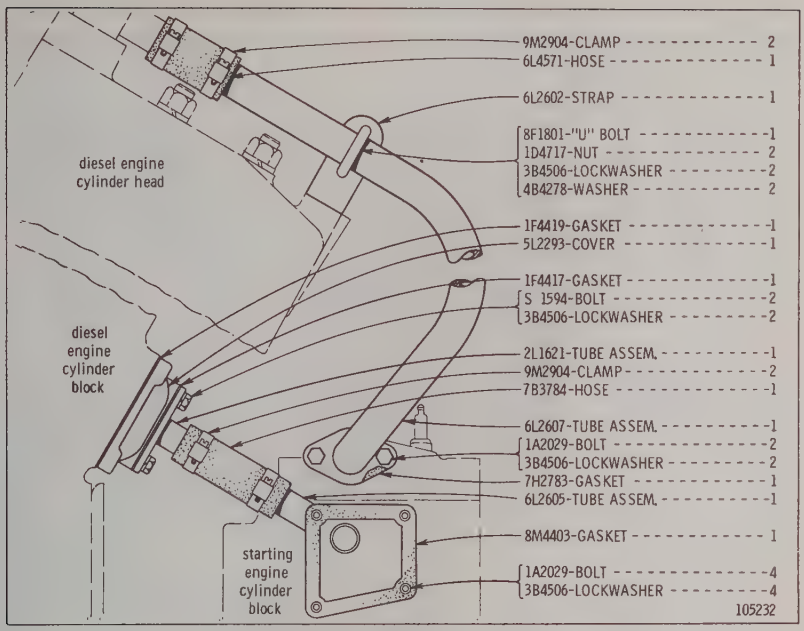

6L2601 WATER LINES GROUP

Effective with Starting Engine Block No. F1270

Part of Complete Gasoline Starting Engine Arrangements listed on Page 85

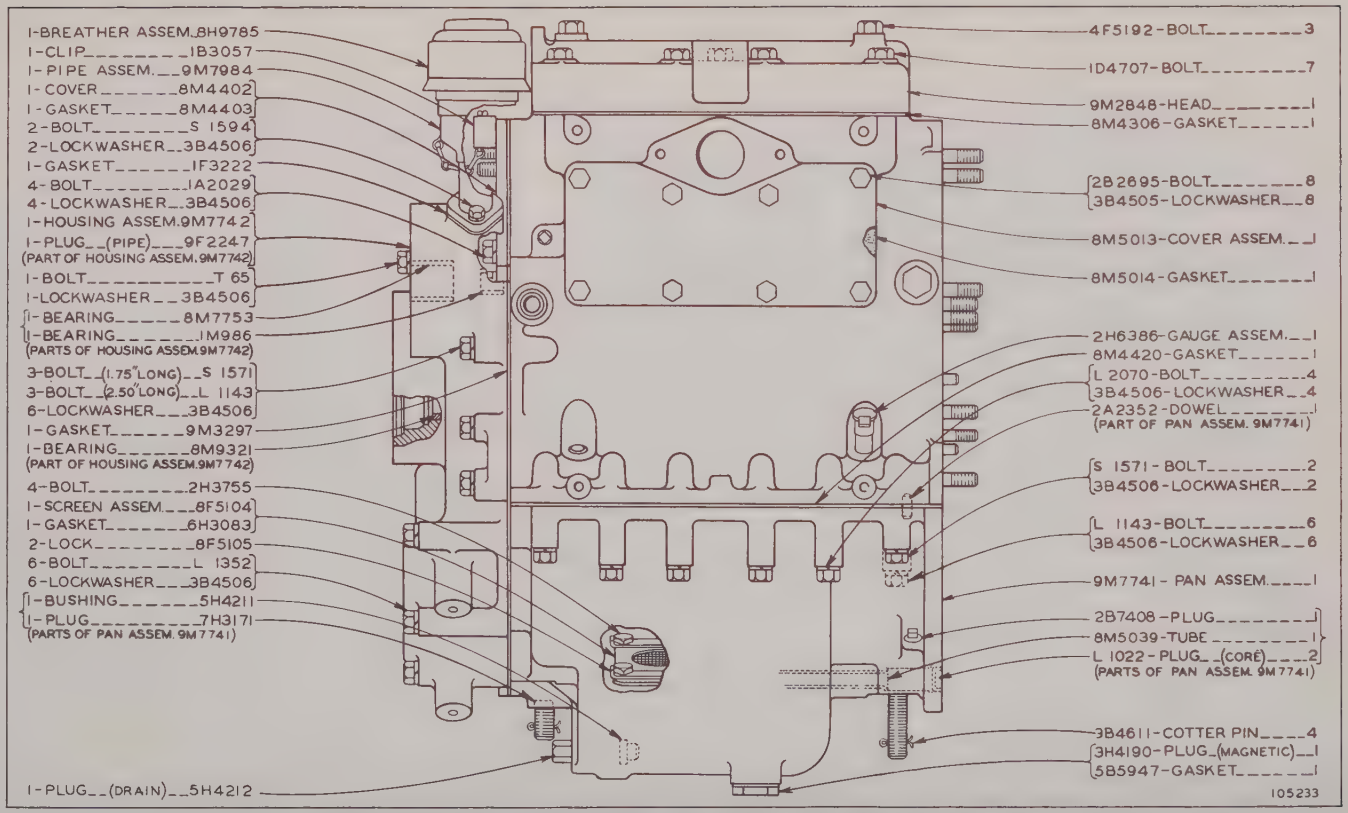

CYLINDER BLOCK, CYLINDER HEAD AND VALVE MECHANISM—Part 1
Effective with Starting Engine Block No. F1270
Part of Basic Starting Engine Arrangement listed on Page 85. See Page 51 for Gasket Kits

CYLINDER BLOCK, CYLINDER HEAD AND VALVE MECHANISM—Part Two

Effective with Starting Engine Block No. F1270

Part of Basic Starting Engine Arrangement listed on Page 85

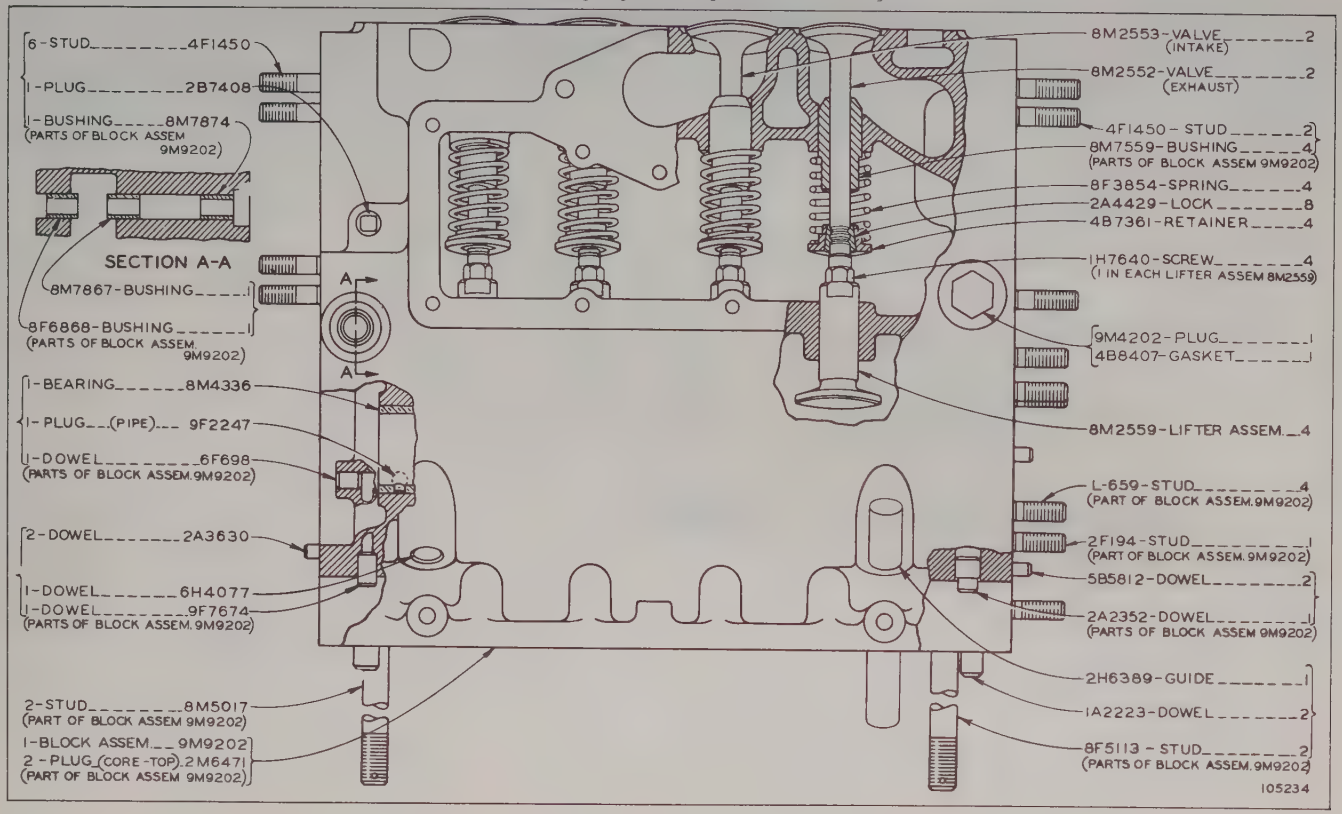

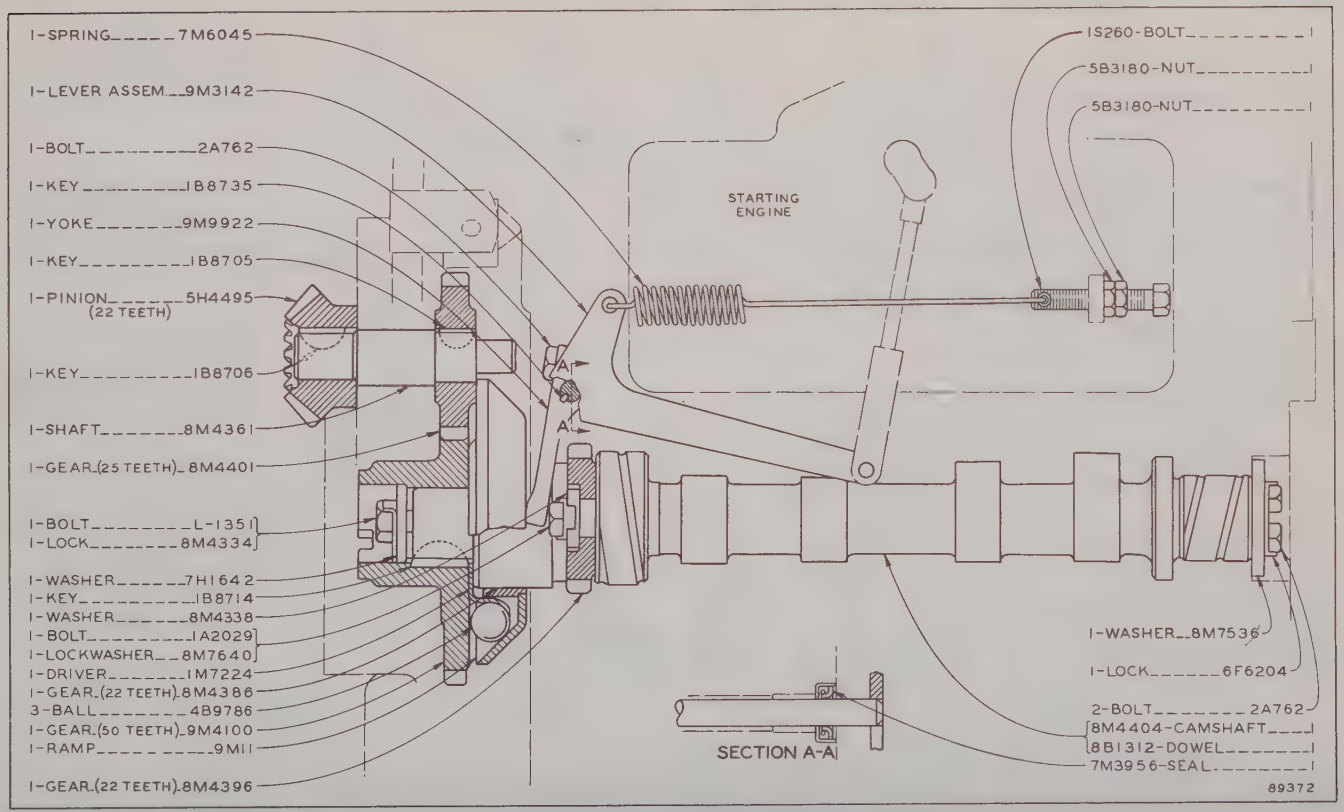

CAMSHAFT AND GOVERNOR
Effective with Starting Engine Block No. F1270
Part of Basic Starting Engine Arrangement listed on Page 85

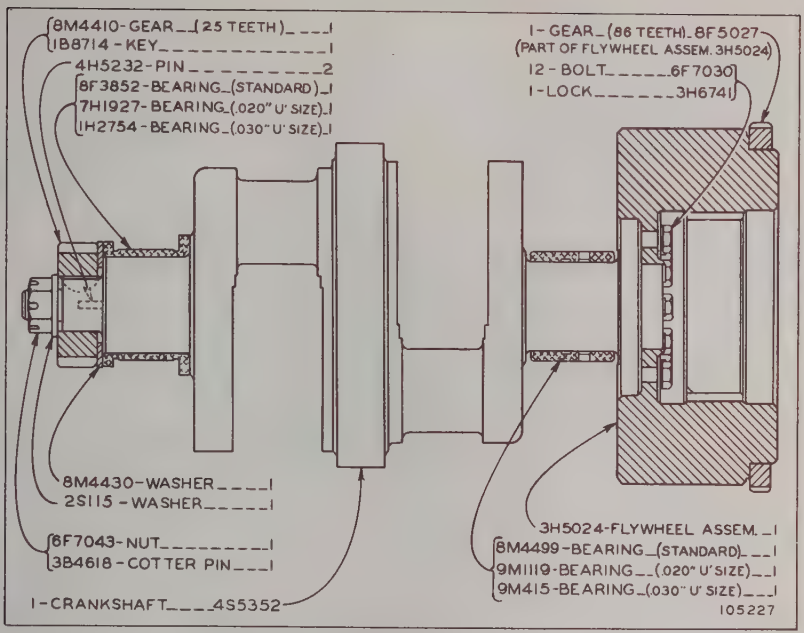

CRANKSHAFT
Effective with Starting Engine Block No. F1270
Part of Basic Starting Engine Arrangement listed on Page 85

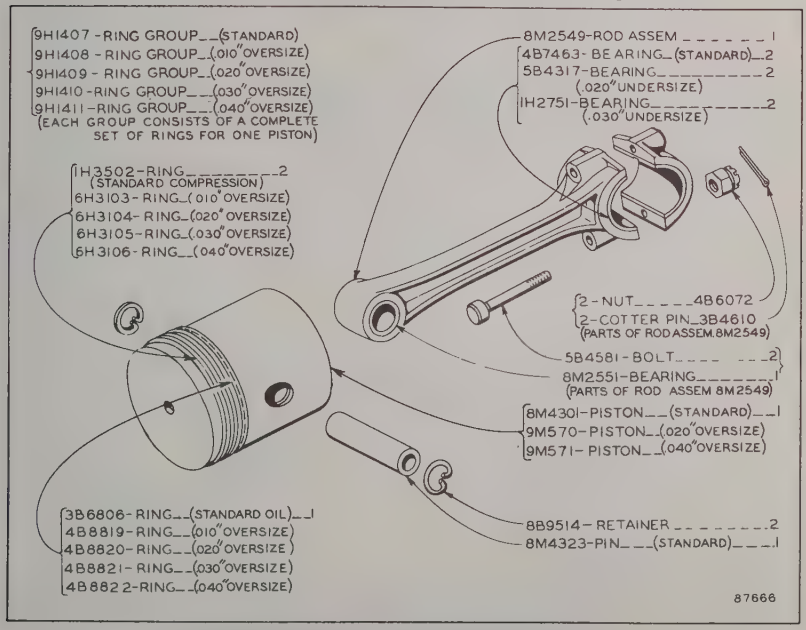

CONNECTING ROD AND PISTON—2 Required
Effective with Starting Engine Block No. F1270
Part of Basic Starting Engine Arrangement listed on Page 85

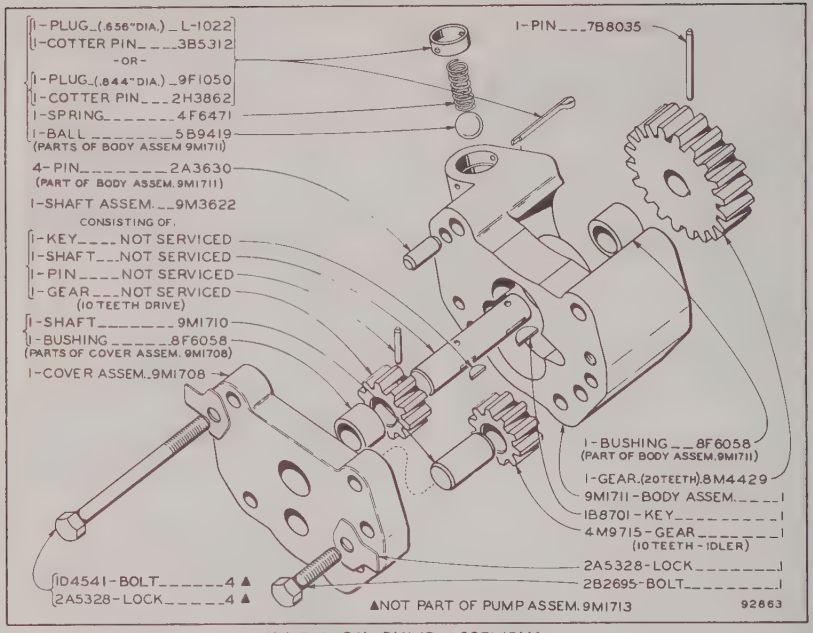

9M1713 OIL PUMP ASSEMBLY
Effective with Starting Engine Block No. F1270
Part of Basic Starting Engine Arrangement listed on Page 85

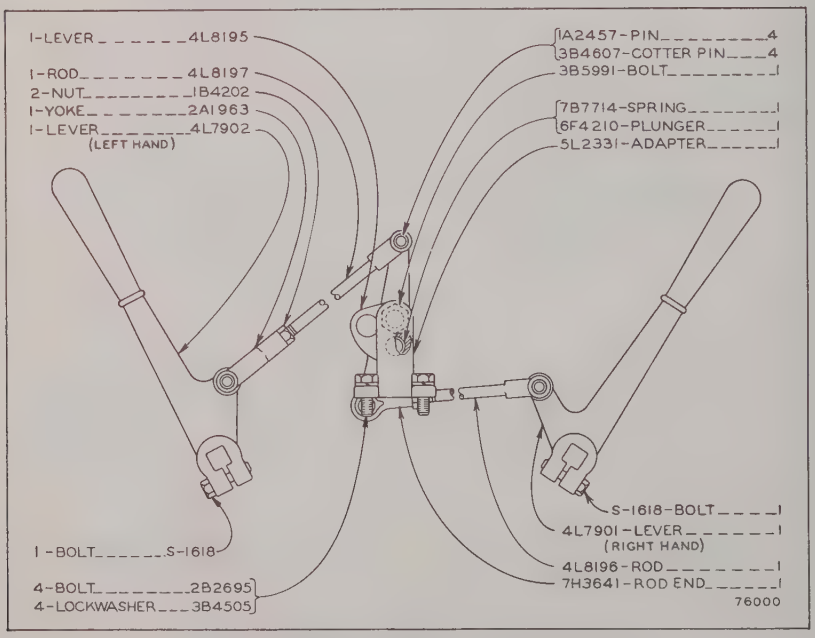

4L1147 COMPRESSION RELEASE CONTROL GROUP
Serial No. 68B675 to 68B707 inclusive and 76B1 to 76B87 inclusive
Part of Complete Gasoline Starting Engine Arrangement listed on Page 85

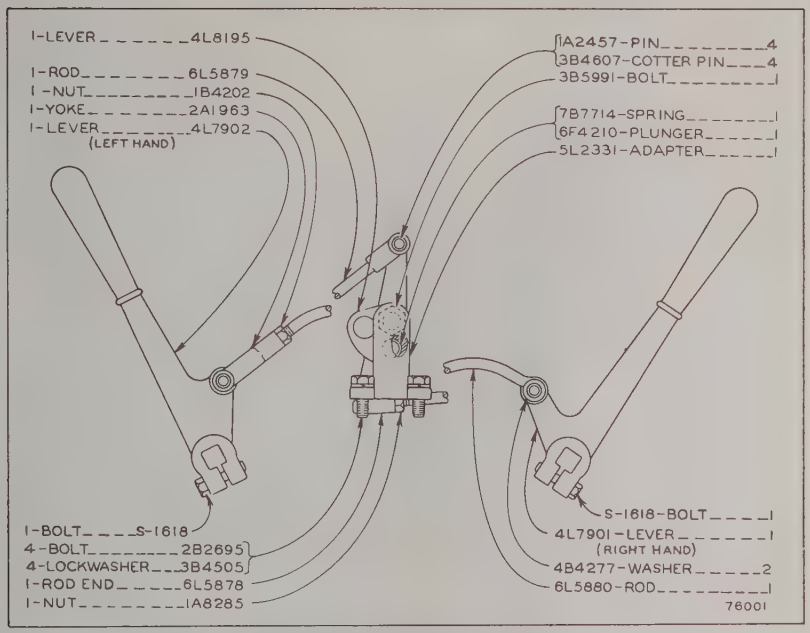

4L1147 COMPRESSION RELEASE CONTROL GROUP
Effective with Serial No. 68B708—Up and 76B88—Up
Part of Complete Gasoline Starting Engine Arrangement listed on Page 85

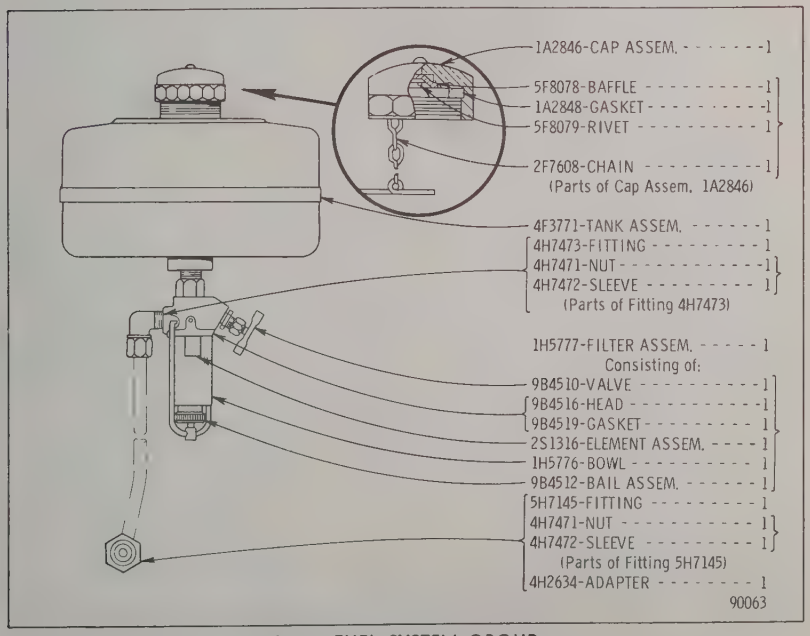

6L2579 FUEL SYSTEM GROUP
Effective with Starting Engine Block No. F1270
Part of Complete Gasoline Starting Engine Arrangement listed on Page 85

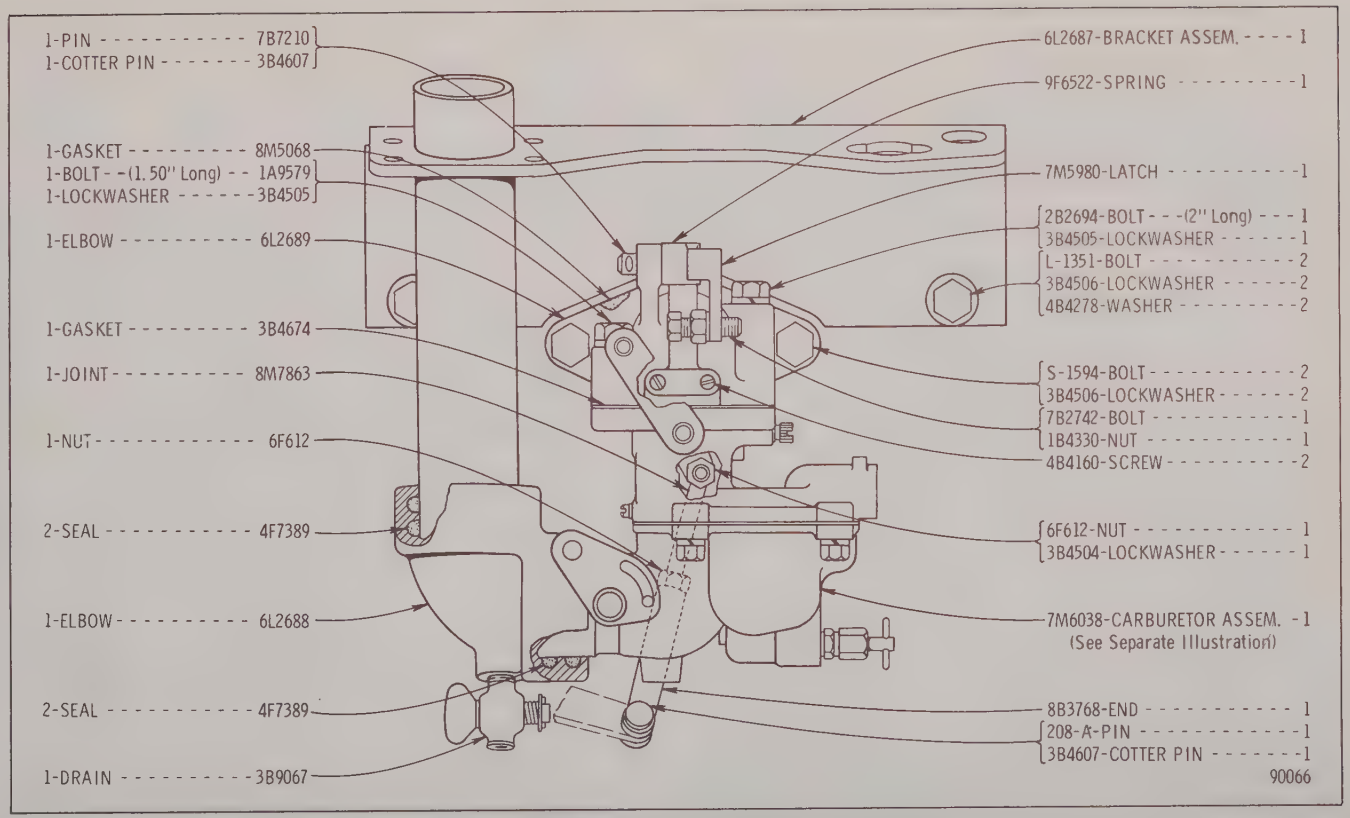

6L2529 CARBURETOR AND AIR TRANSFER PIPE GROUP
Effective with Starting Engine Block No. F1270
Part of Basic Starting Engine Arrangement listed on Page 85

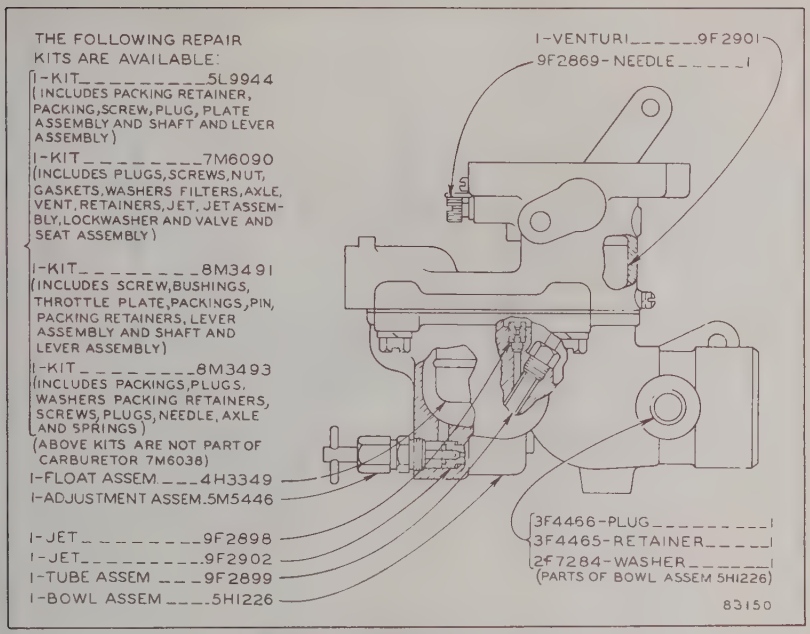

7M6038 CARBURETOR ASSEMBLY
Part of 6L2529 Carburetor and Air Transfer Pipe Group

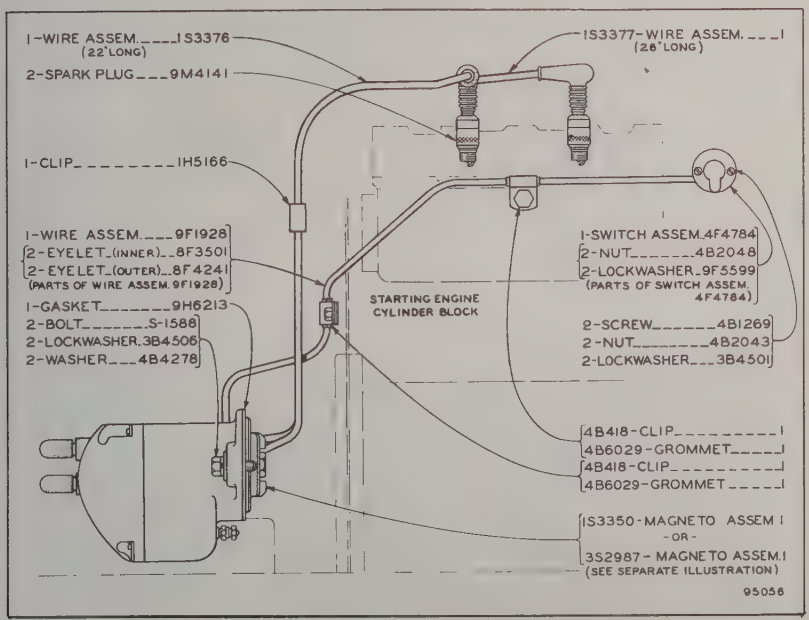

4L4471 IGNITION SYSTEM GROUP
Effective with Starting Engine Block No. F1270
Part of Basic Starting Engine Arrangement listed on Page 85
1S3350 and 3S2987 Magneto Assembly parts are shown on Pages 96 and 97

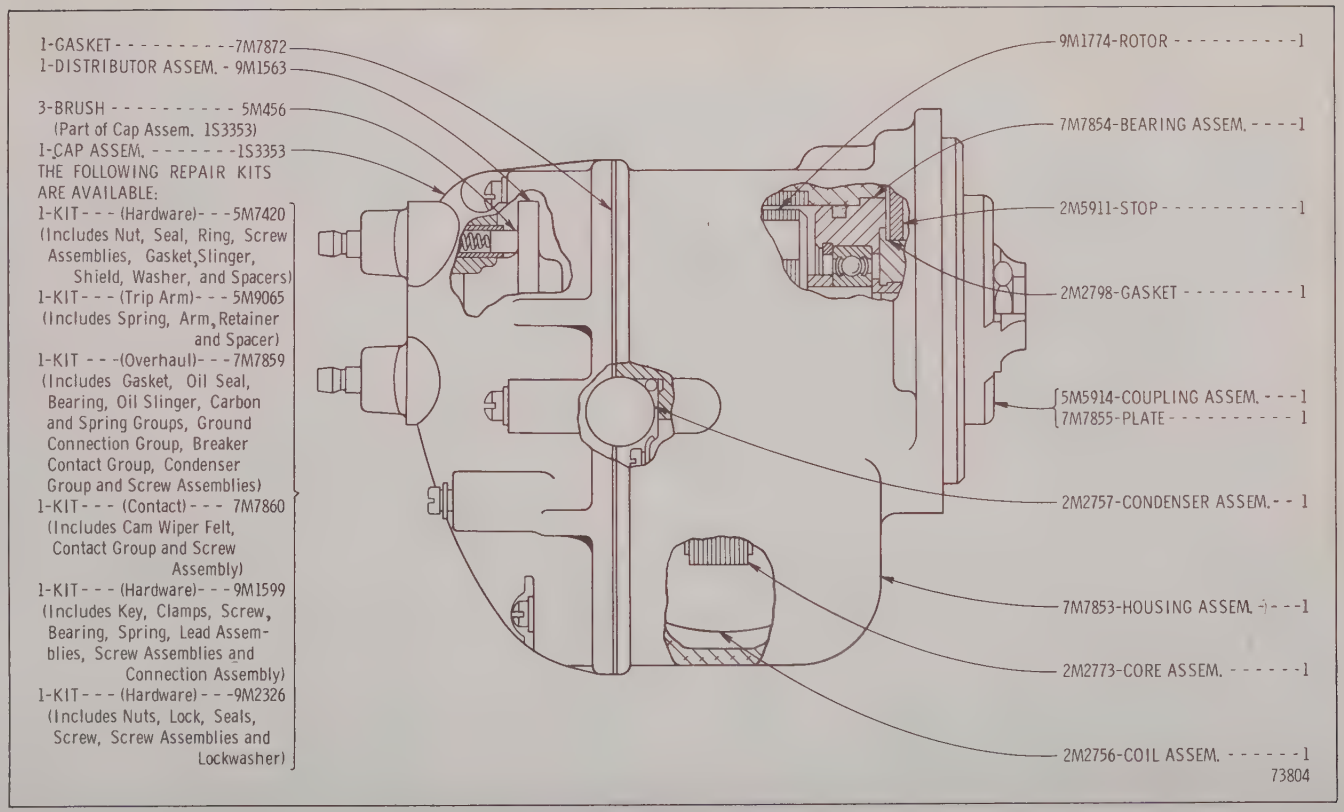

1S3350 MAGNETO ASSEMBLY

Part of 4L4471 Ignition System Group shown on Page 95

Only separate parts serviced. When complete Assembly is required order 3S2987

3S2987 MAGNETO ASSEMBLY

Part of 4L4471 Ignition System Group shown on Page 95

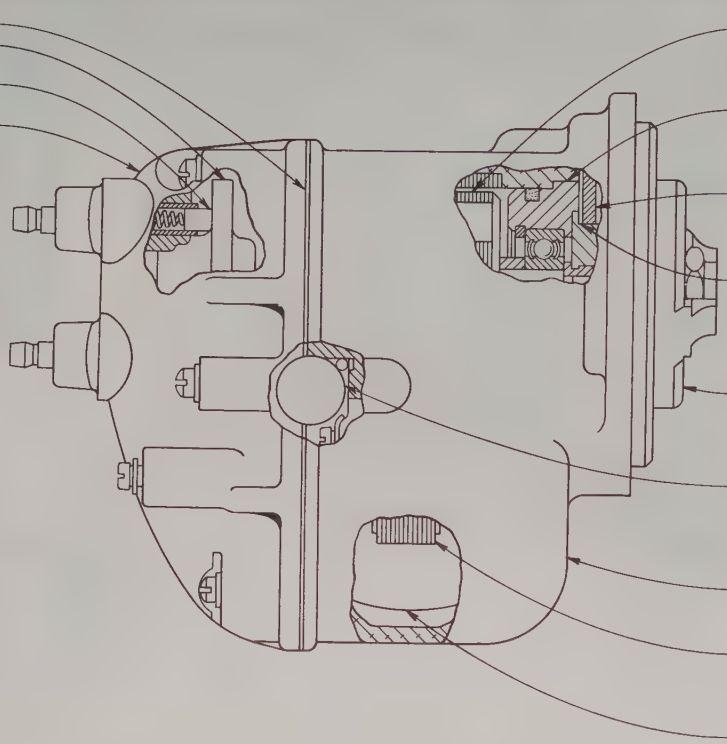

1-GASKET - - - - - - - - - -7M7872
1-DISTRIBUTOR ASSEM. - 9M1563

3-BRUSH - - - - - - - - - - 5M456
(Part of Cap Assem. 1S3353)
1-CAP ASSEM. - - - - - - - -1S3353
THE FOLLOWING REPAIR KITS ARE AVAILABLE:
1-KIT - - - (Hardware)- - - -5M7420
(Includes Nut, Seal, Ring, Screw Assemblies, Gasket, Slinger, Shield, Washer and Spacers)
1-KIT - - - (Trip Arm)- - - 5M9065
(Includes Spring, Arm, Retainer and Spacer)
1-KIT - - -(Overhaul)- - - 7M7859
(Includes Gasket, Oil Seal, Bearing, Oil Slinger, Carbon and Spring Groups, Ground Connection Group, Breaker Contact Group, Condenser Group and Screw Assemblies)
1-KIT - - - (Contact) - - - 7M7860
(Includes Cam Wiper Felt, Contact Group and Screw Assembly)
1-KIT - - - (Hardware)- - - 9M1599
(Includes Key, Clamps, Screw, Bearing, Spring, Lead Assemblies, Screw Assemblies and Connection Assembly)
1-KIT - - - (Hardware) - - - 9M2326
(Includes Nuts, Lock, Seals, Screw, Screw Assemblies and Lockwasher)

9M1774-ROTOR - - - - - - - - - - 1
7M7854-BEARING ASSEM. - - - - 1
2M5911-STOP - - - - - - - - - - - 1
2M2798-GASKET - - - - - - - - - 1
3S5525-COUPLING ASSEM. - - - 1
3S5524-PLATE - - - (Lock) - - - 1
2M2757-CONDENSER ASSEM. - - 1
7M7853-HOUSING ASSEM. - - - - 1
2M2773-CORE ASSEM. - - - - - - 1
2M2756-COIL ASSEM. - - - - - - 1

93685

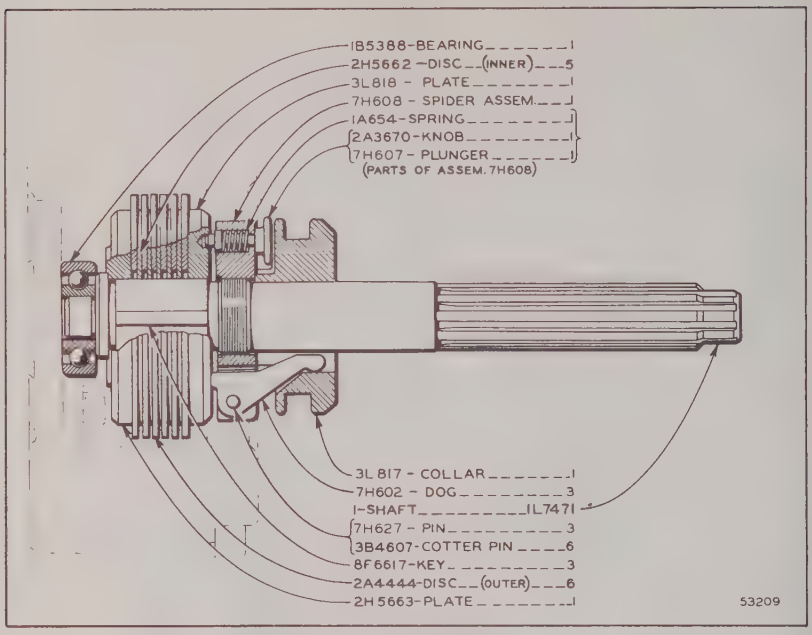

1L7470 CLUTCH GROUP
Serial No. 68B675 to 68B782 inclusive and 76B1 to 76B92 inclusive
Part of Complete Gasoline Starting Engine Arrangement listed on Page 85

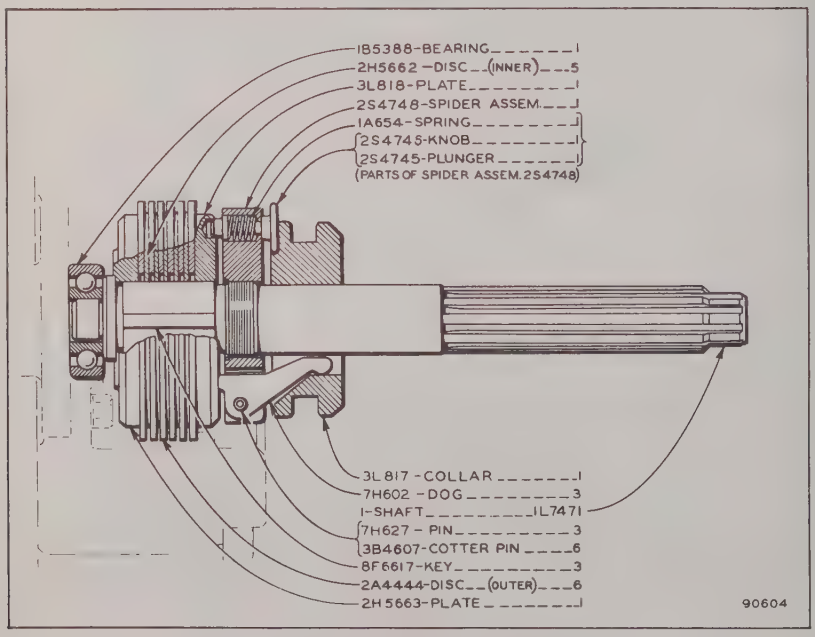

1L7470 CLUTCH GROUP
Effective with Serial No. 68B783—Up and 76B93—Up
Part of Complete Gasoline Starting Engine Arrangement listed on Page 85

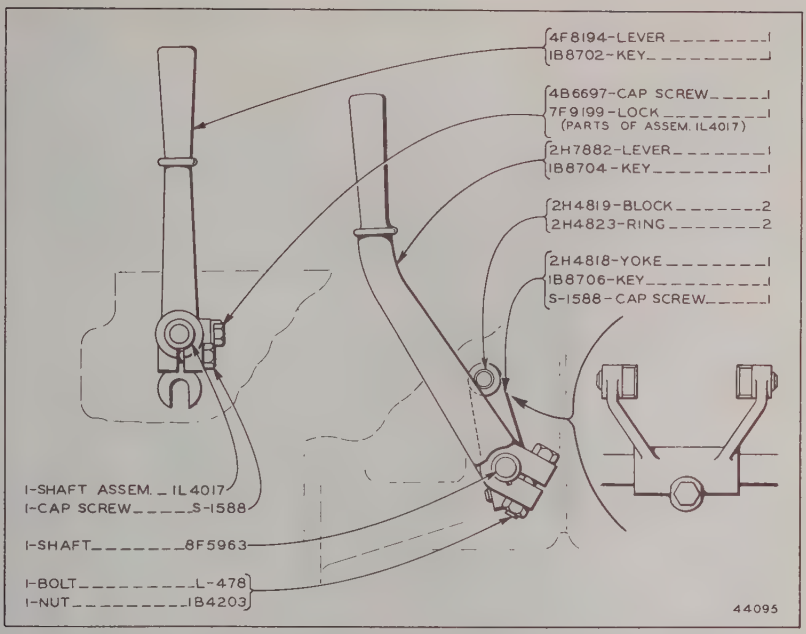

1H9435 CLUTCH AND STARTER PINION CONTROL GROUP
Part of 6L2669 and 6L2668 Transmission and Starter Pinion Groups shown on Pages 100 and 102

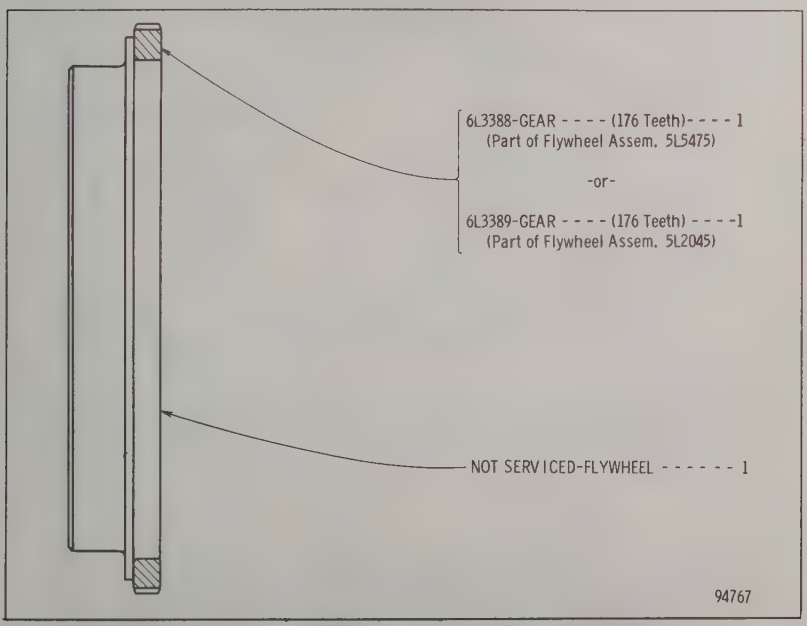

5L5475 FLYWHEEL ASSEMBLY—S.A.E. Standard Engine Rotation
Part of 6L2669 Transmission and Starter Pinion Group shown on Page 100
5L2045 FLYWHEEL ASSEMBLY—S.A.E. Opposite Standard Engine Rotation
Part of 6L2668 Transmission and Starter Pinion Group shown on Page 102

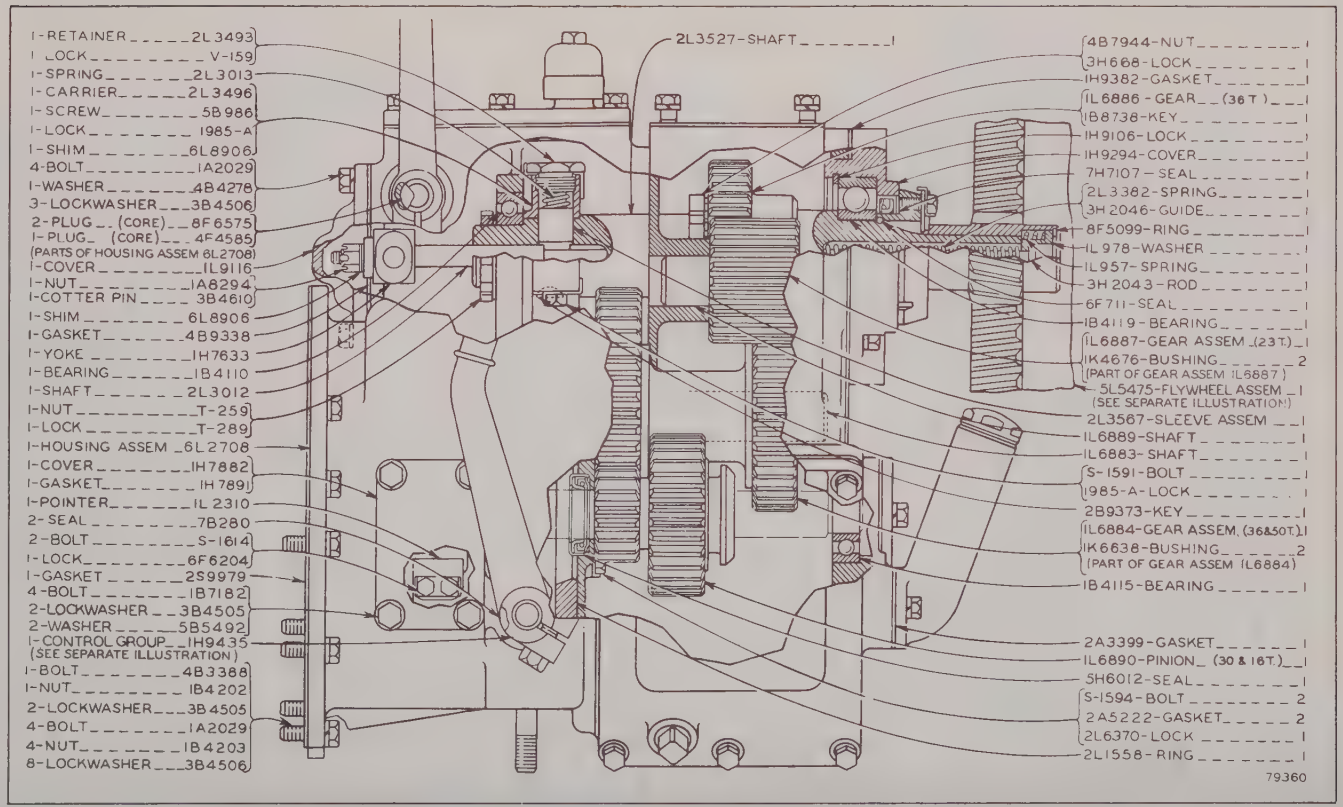

6L2669 TRANSMISSION AND STARTER PINION GROUP—S.A.E. Standard Engine Rotation—Side View

Effective with Starting Engine Block No. F1270

Part of Complete Gasoline Starting Engine Arrangement listed on Page 85

1H9435 Clutch and Starter Pinion Control Group and 5L5475 Flywheel Assembly parts are shown on Page 99. See Page 51 for Gasket Kits

6L2669 TRANSMISSION AND STARTER PINION GROUP—S.A.E. Standard Engine Rotation—End View

Effective with Starting Engine Block No. F1270

Part of Complete Gasoline Starting Engine Arrangement listed on Page 85

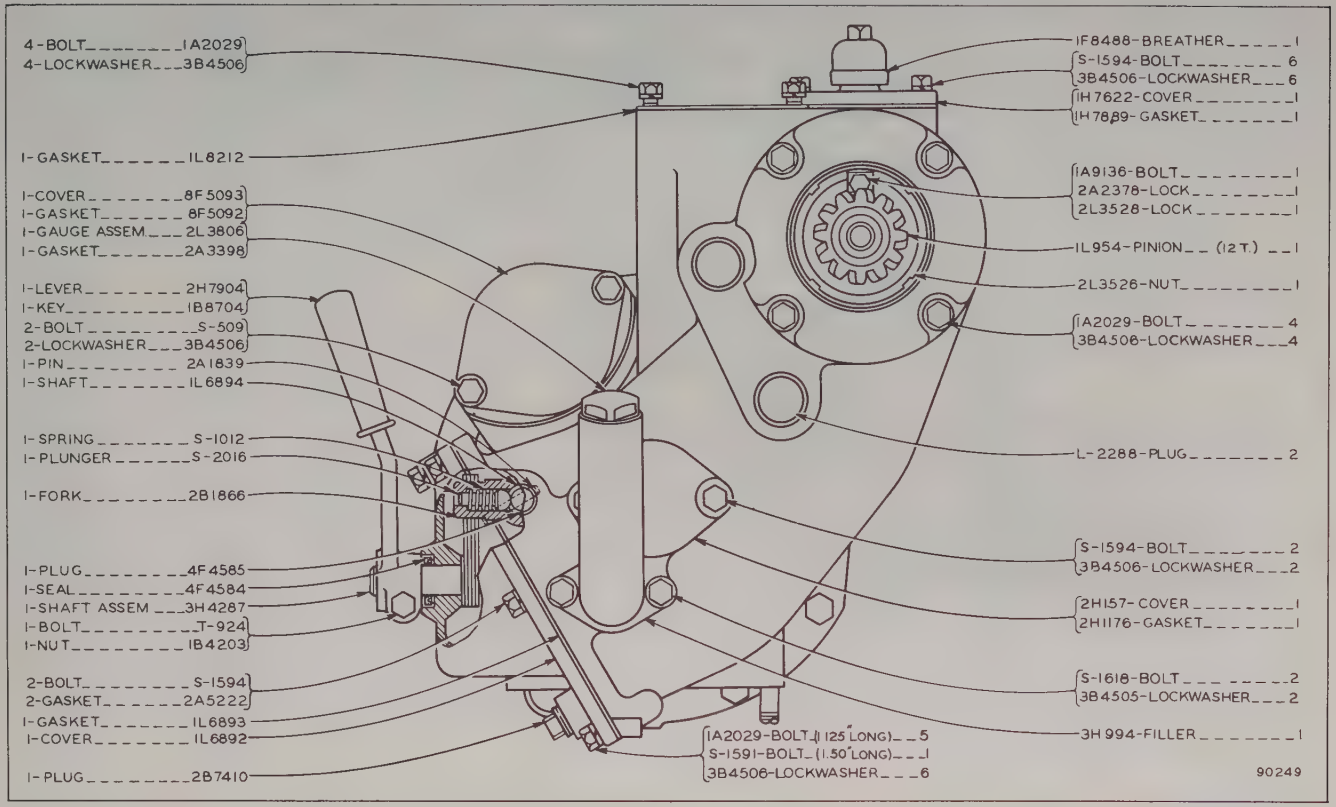

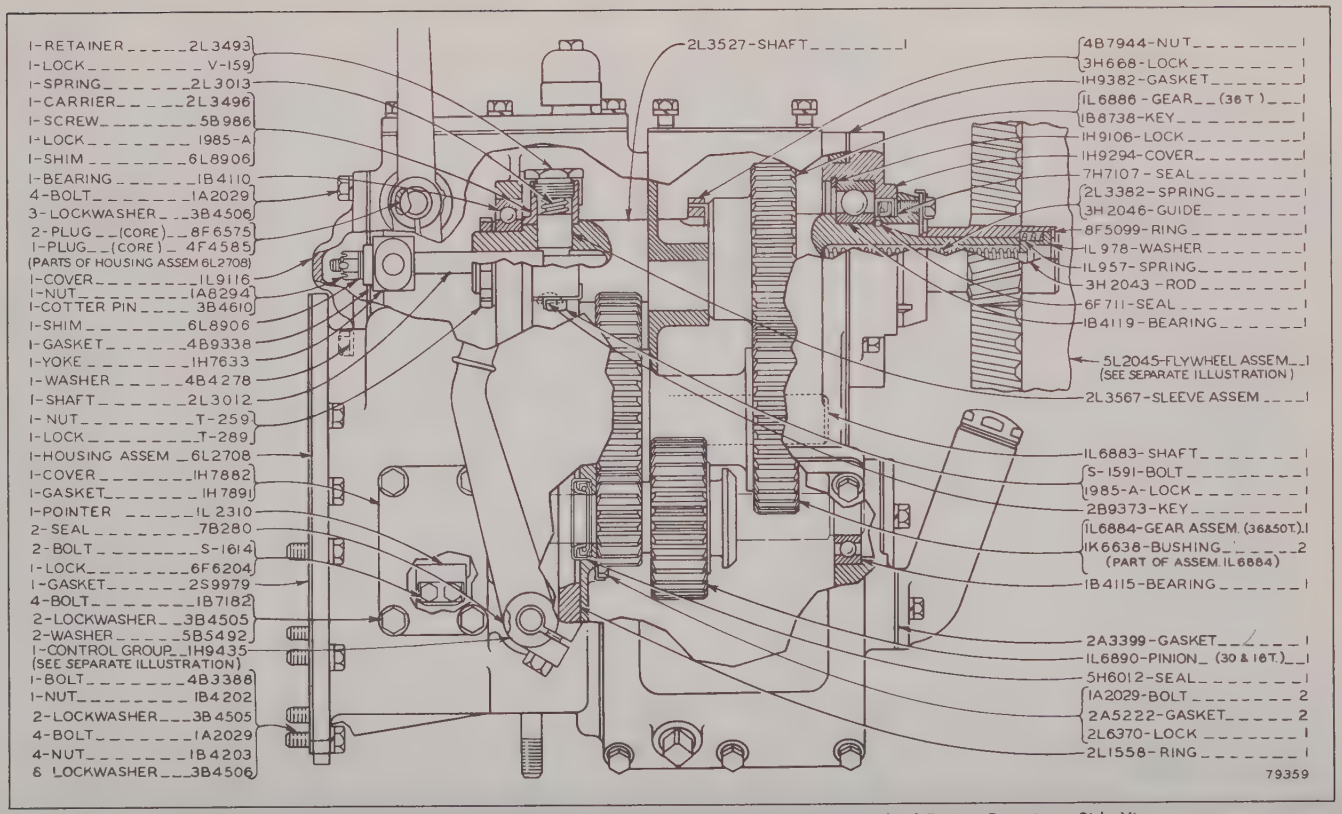

6L2668 TRANSMISSION AND STARTER PINION GROUP—S.A.E. Opposite Standard Engine Rotation—Side View

Effective with Starting Engine Block No. F1270

Part of Complete Gasoline Starting Engine Arrangement listed on Page 85

1H9435 Clutch and Starter Pinion Control Group and 5L2045 Flywheel Assembly parts are shown on Page 99. See Page 51 for Gasket Kits

6L2668 TRANSMISSION AND STARTER PINION GROUP—S.A.E. Opposite Standard Engine Rotation—End View

Effective with Starting Engine Block No. F1270

Part of Complete Gasoline Starting Engine Arrangement listed on Page 85

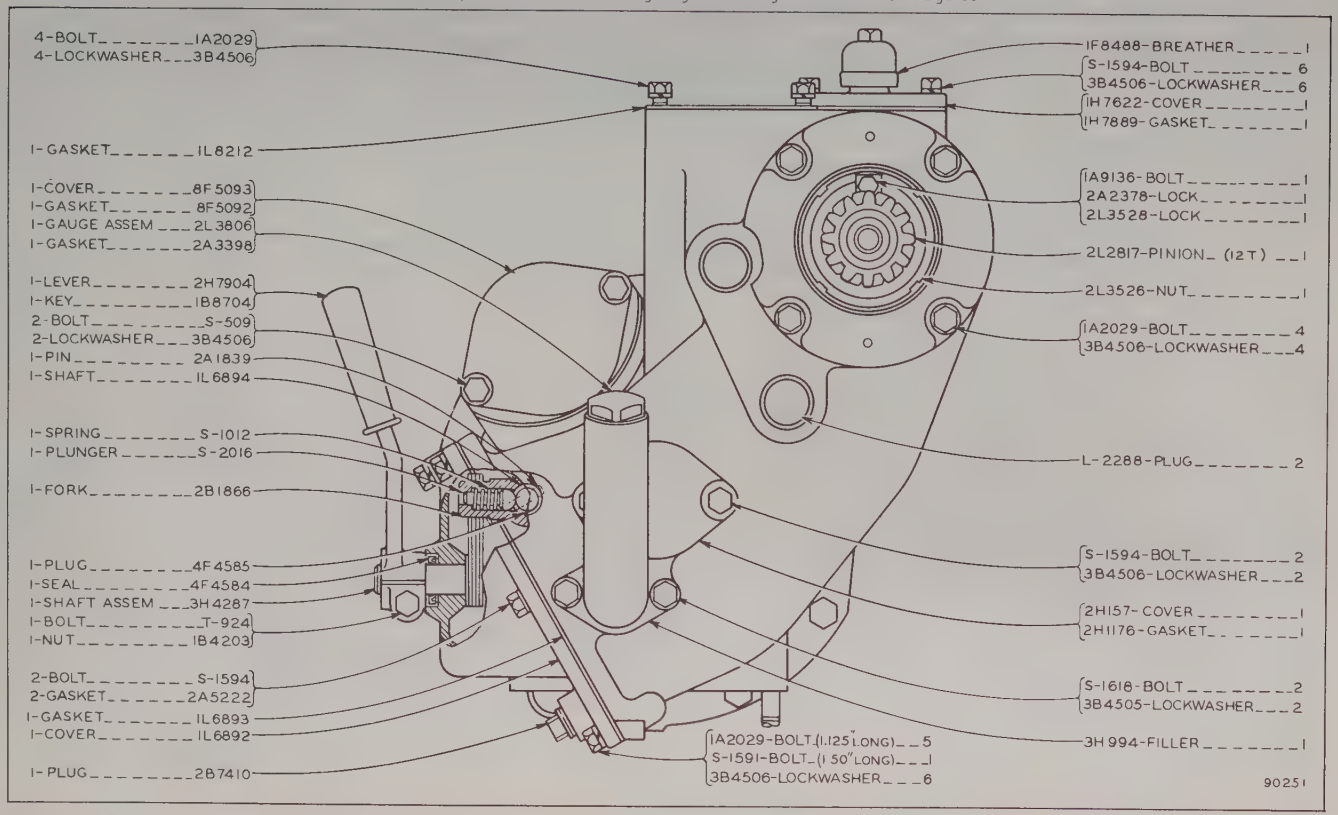

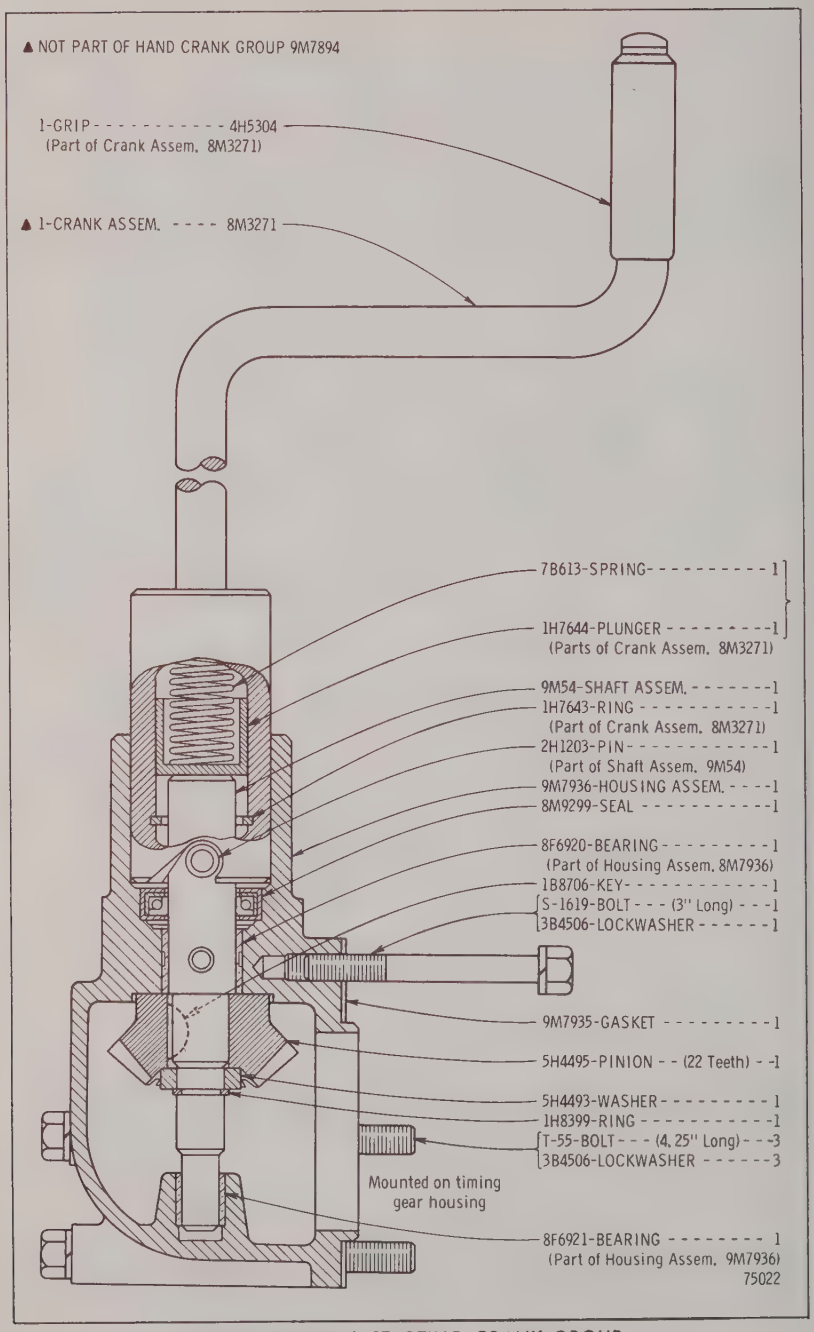

9M7894 MANUAL STARTING CRANK GROUP
Effective with Starting Engine Block No. F1270
Part of Basic Starting Engine Arrangement listed on Page 85

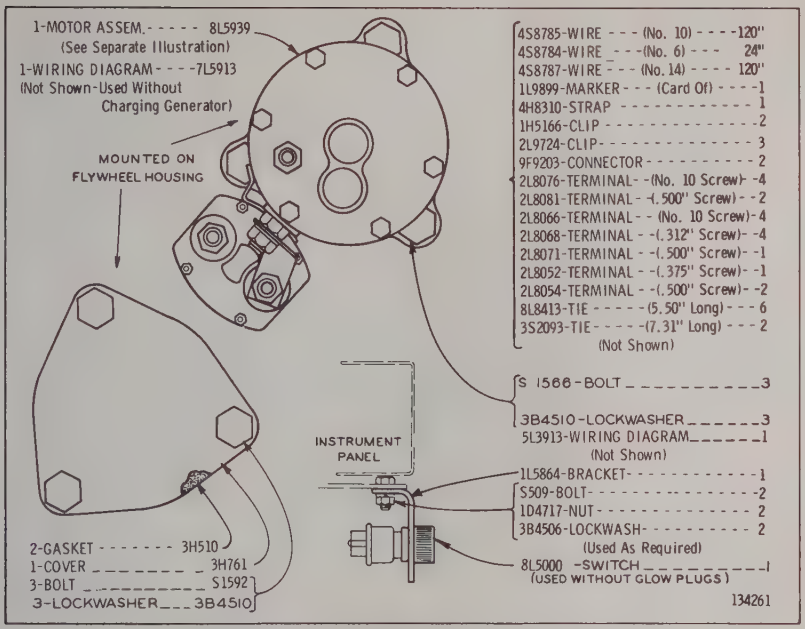

6L1550 SINGLE STARTING MOTOR GROUP—32 Volt
FOR USE WITH NORMAL LOAD AND AMBIENT TEMPERATURE
RANGING 60°F. AND ABOVE. 8L5939 Motor
parts are shown on Pages 108D and 109

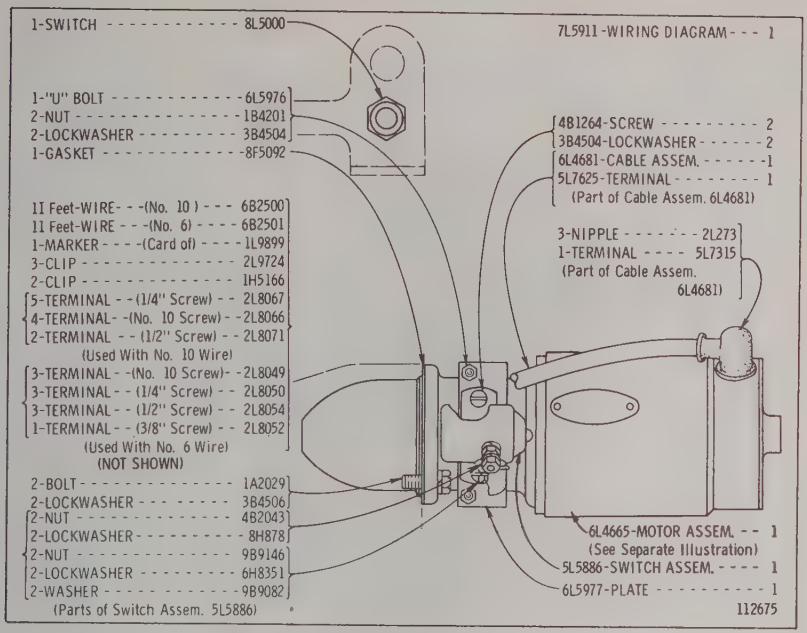

6L5978 ELECTRIC STARTING GROUP—12 Volt
FOR USE WITH GASOLINE STARTING

6L4665 Electric Motor Assembly parts are shown on Page 114

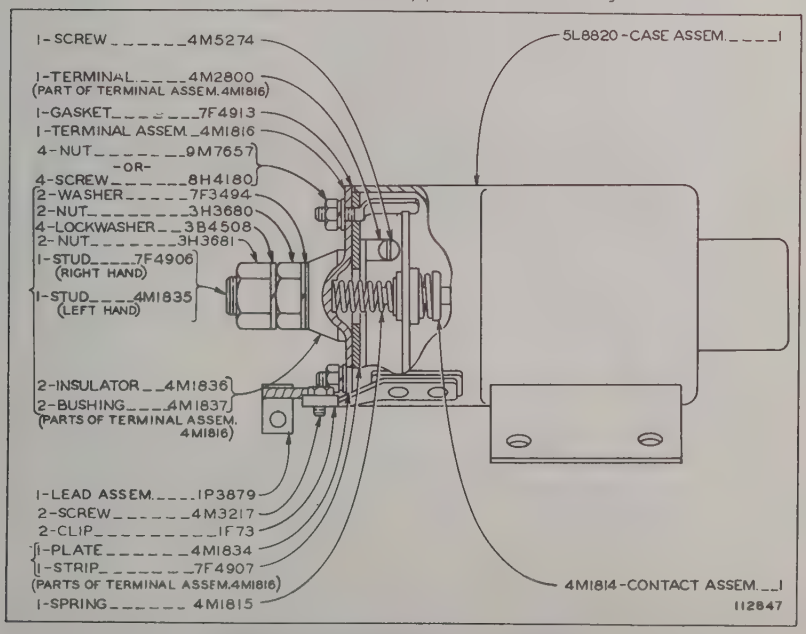

5L8595 SOLENIOD SWITCH ASSEMBLY

Part of 5L4405 Starting Motor Assembly shown on Page 108

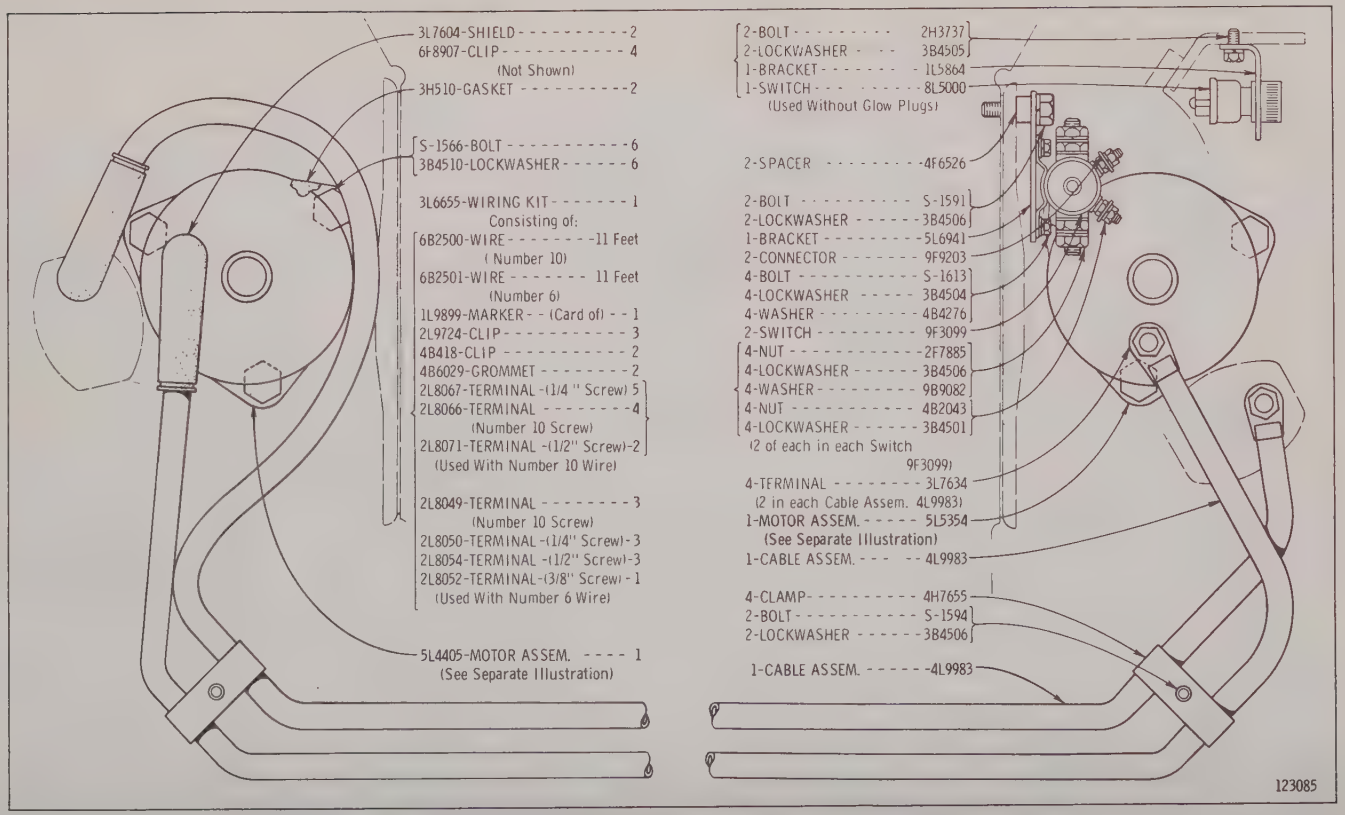

6L2747 ELECTRIC STARTING GROUP–32 Volt–S.A.E. Standard Engine Rotation–Type 1
5L4405 and 5L5354 Motor parts are shown on Pages 108 through 108C, 110 and 111

6L2747 ELECTRIC STARTING GROUP—32 Volt—S.A.E. Standard Engine Rotation—Type 2

8L5939 and 8L5937 Motor parts are shown on Pages 108D, 109, 112 and 112A

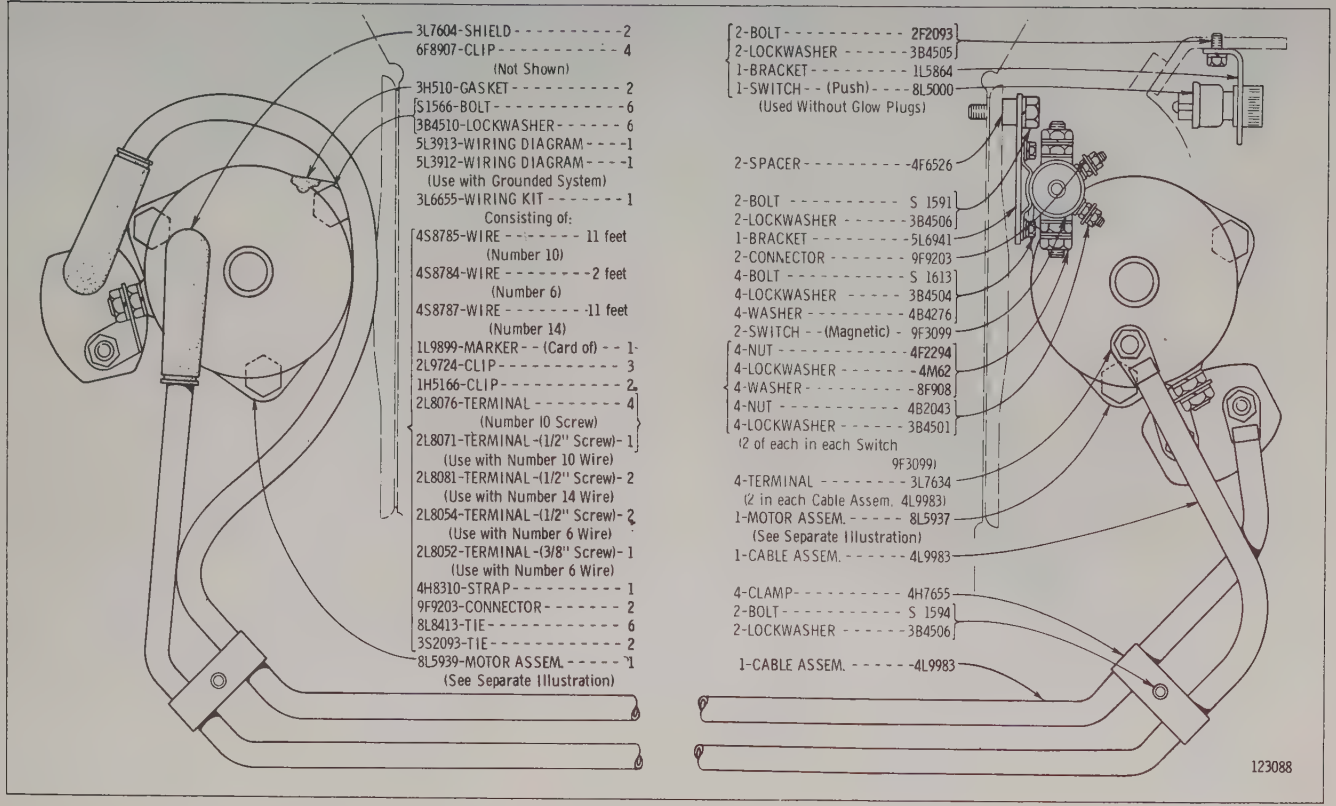

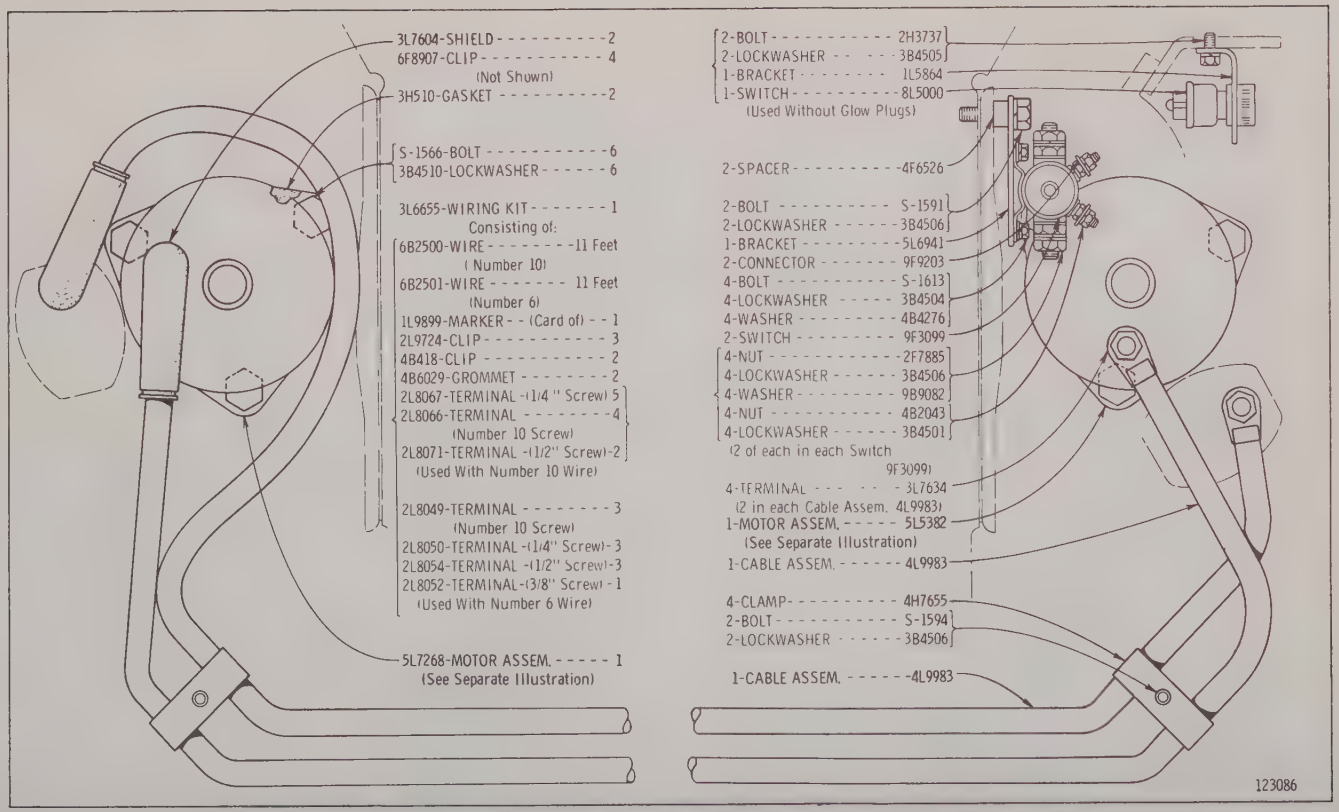

6L2748 ELECTRIC STARTING GROUP—32 Volt—S.A.E. Opposite Standard Engine Rotation—Type 1
5L7268 and 5L5382 Motor parts are shown on Pages 112D and 112E

6L2748 ELECTRIC STARTING GROUP—32 Volt—S.A.E. Opposite Standard Engine Rotation—Type 2

8L6205 Motor parts are shown on Pages 112F and 113

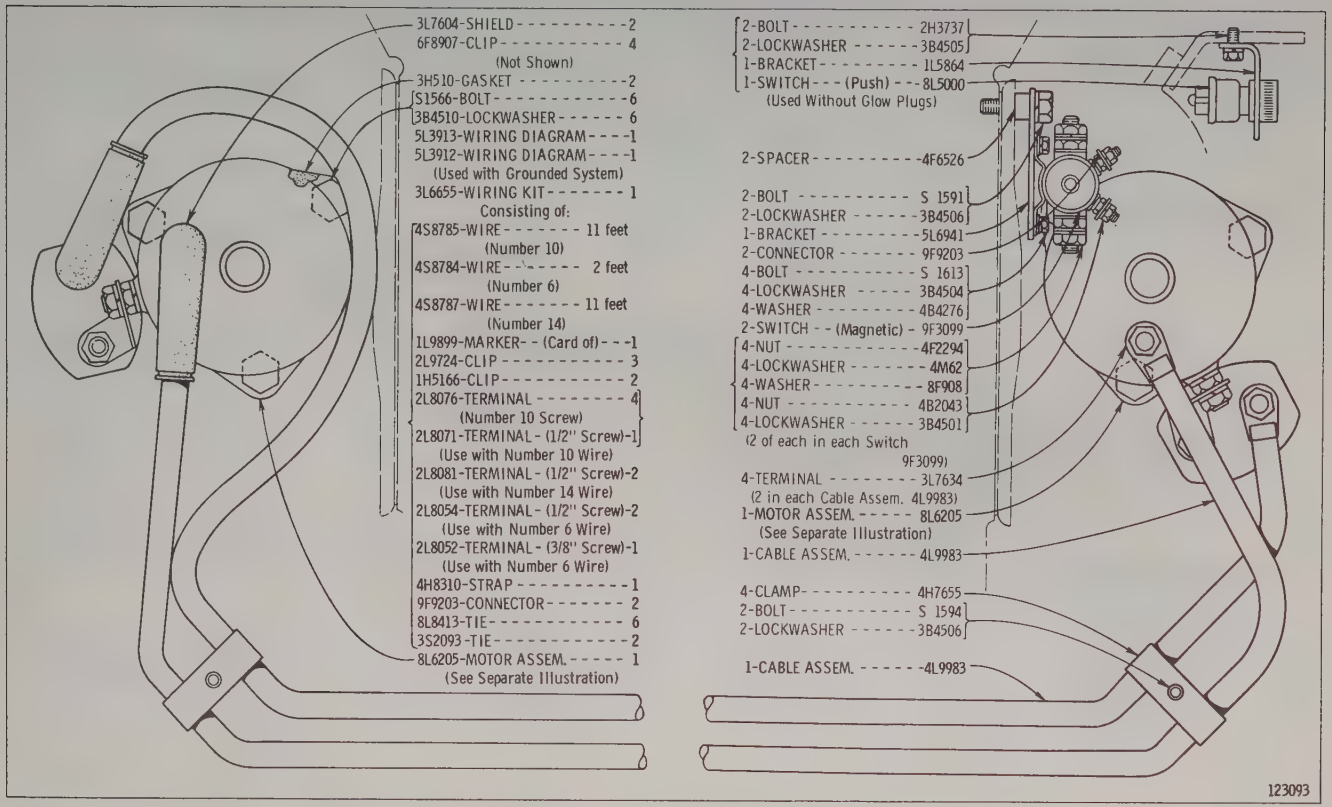

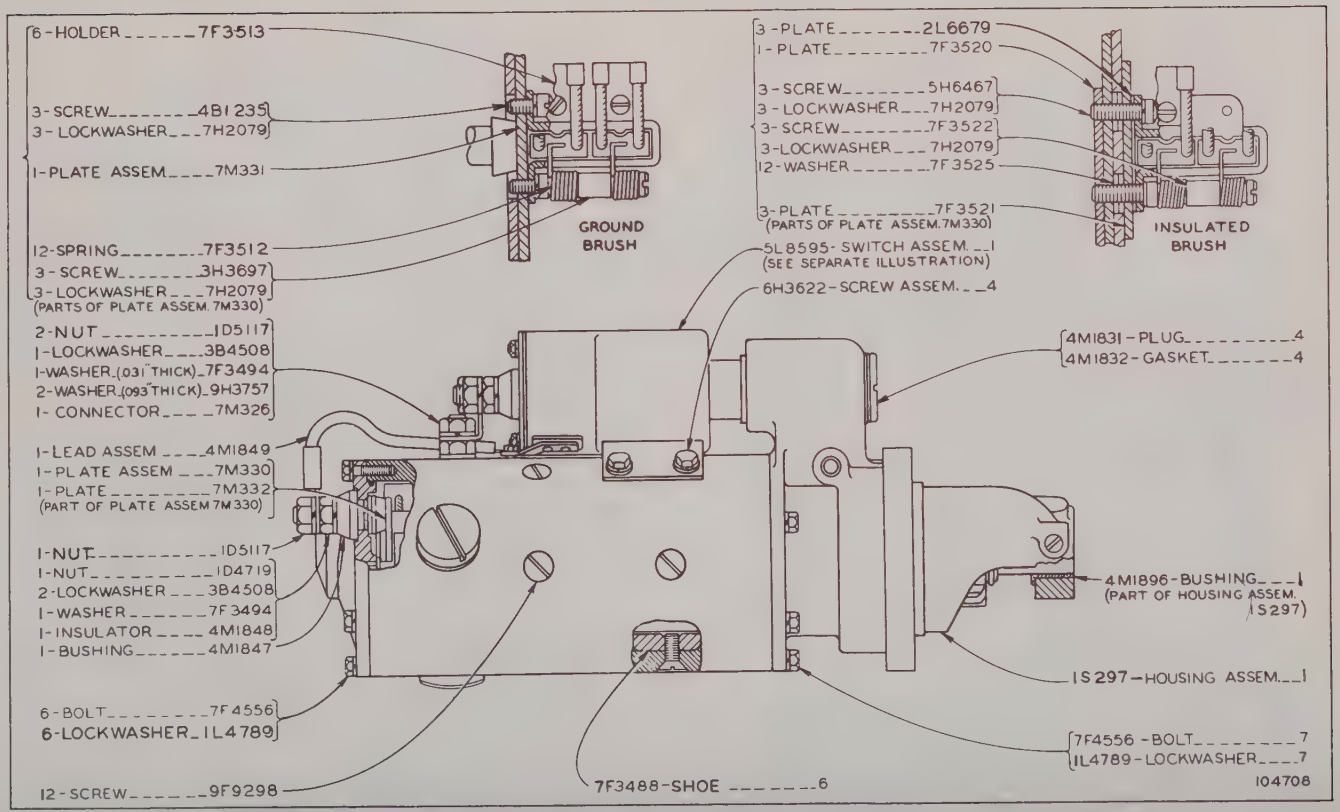

5L4405 MOTOR ASSEMBLY—32 Volt—R.H.—Part 1—Type 1

Part of 6L2747 Electric Starting Group shown on Page 106. 5L8595 Switch parts are shown on Page 105

Only separate parts serviced. When complete Assembly is required order 8L8204 shown on Pages 112B and 112C

5L4405 MOTOR ASSEMBLY—32 Volt—R.H.—Part 2—Type 1

Part of 6L2747 Electric Starting Group shown on Page 106

Only separate parts serviced. When complete Assembly is required order 8L8204 shown on Pages 112B and 112C

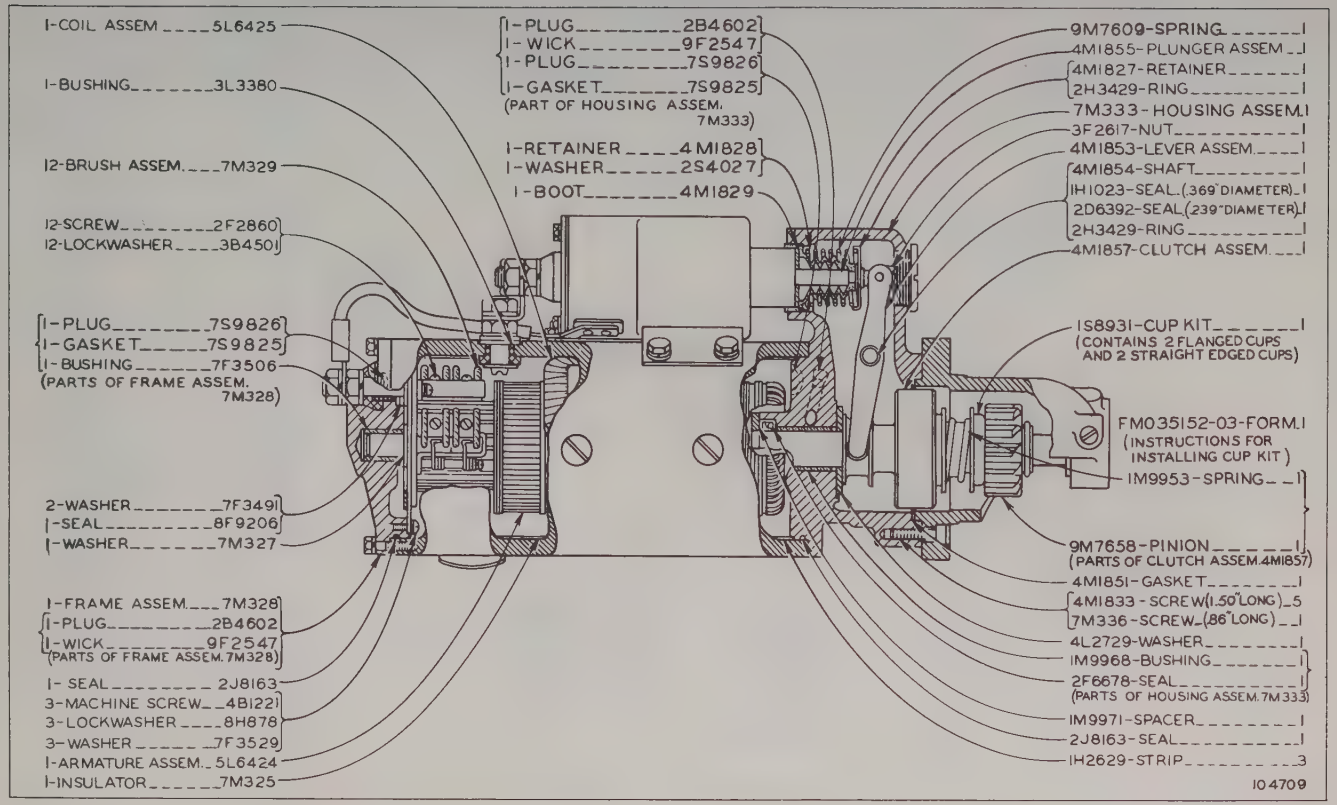

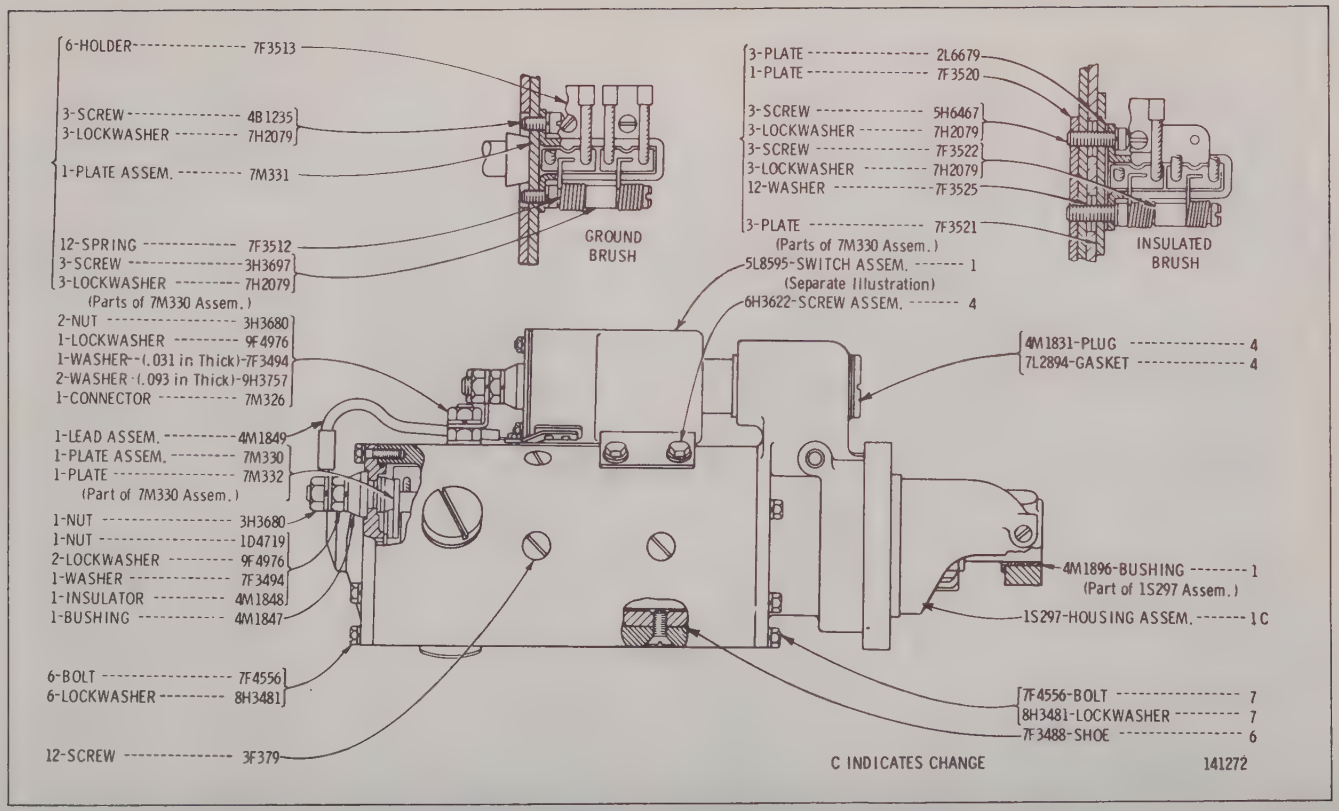

5L4405 MOTOR ASSEMBLY—32 Volt—R.H.—Part 1—Type 2

Part of 6L2747 Electric Starting Group shown on Page 106. 5L8595 Switch parts are shown on Page 105

Only separate parts serviced. When complete Assembly is required order 8L8204 shown on Pages 112B and 112C

5L4405 MOTOR ASSEMBLY—32 Volt—R.H.—Part 2—Type 2

Part of 6L2747 Electric Starting Group shown on Page 106. Only separate parts serviced When complete Assembly is required order 8L8204 shown on Pages 112B and 112C

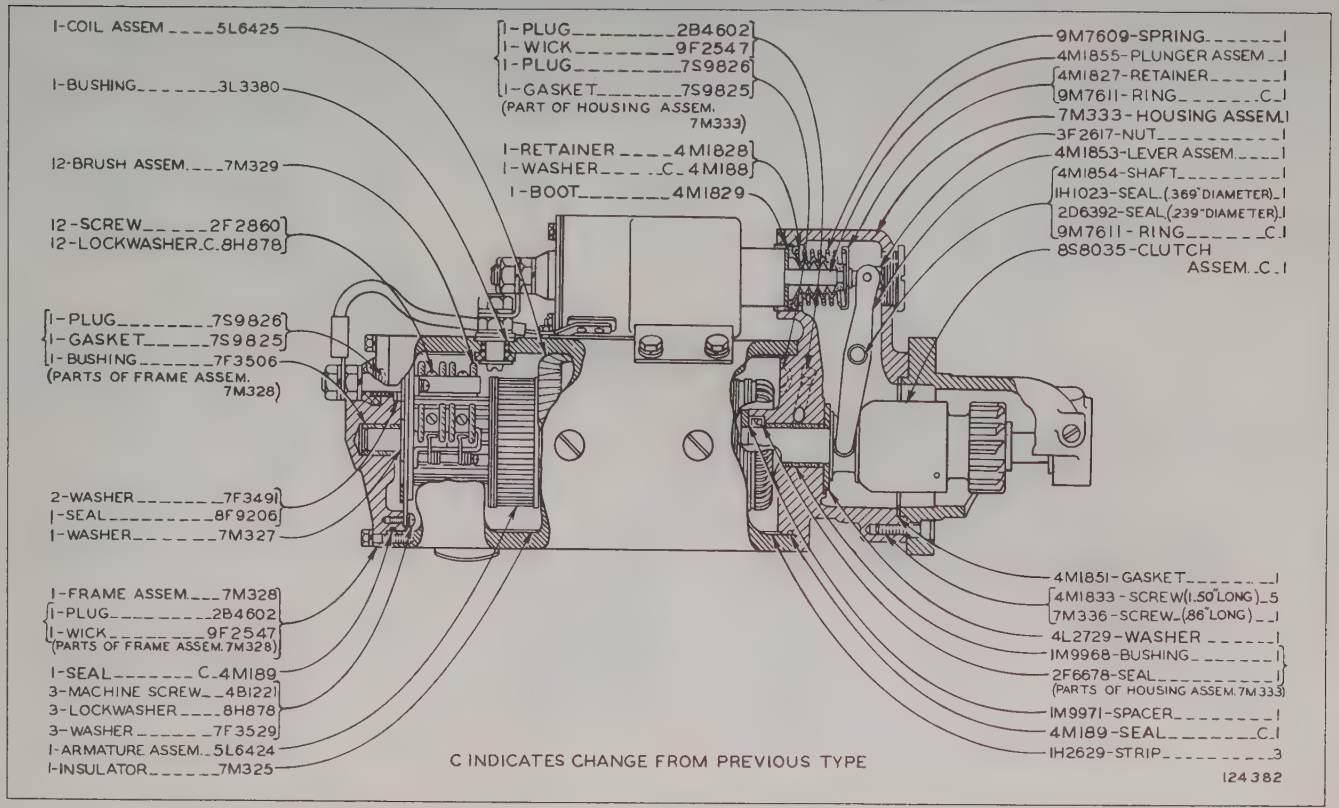

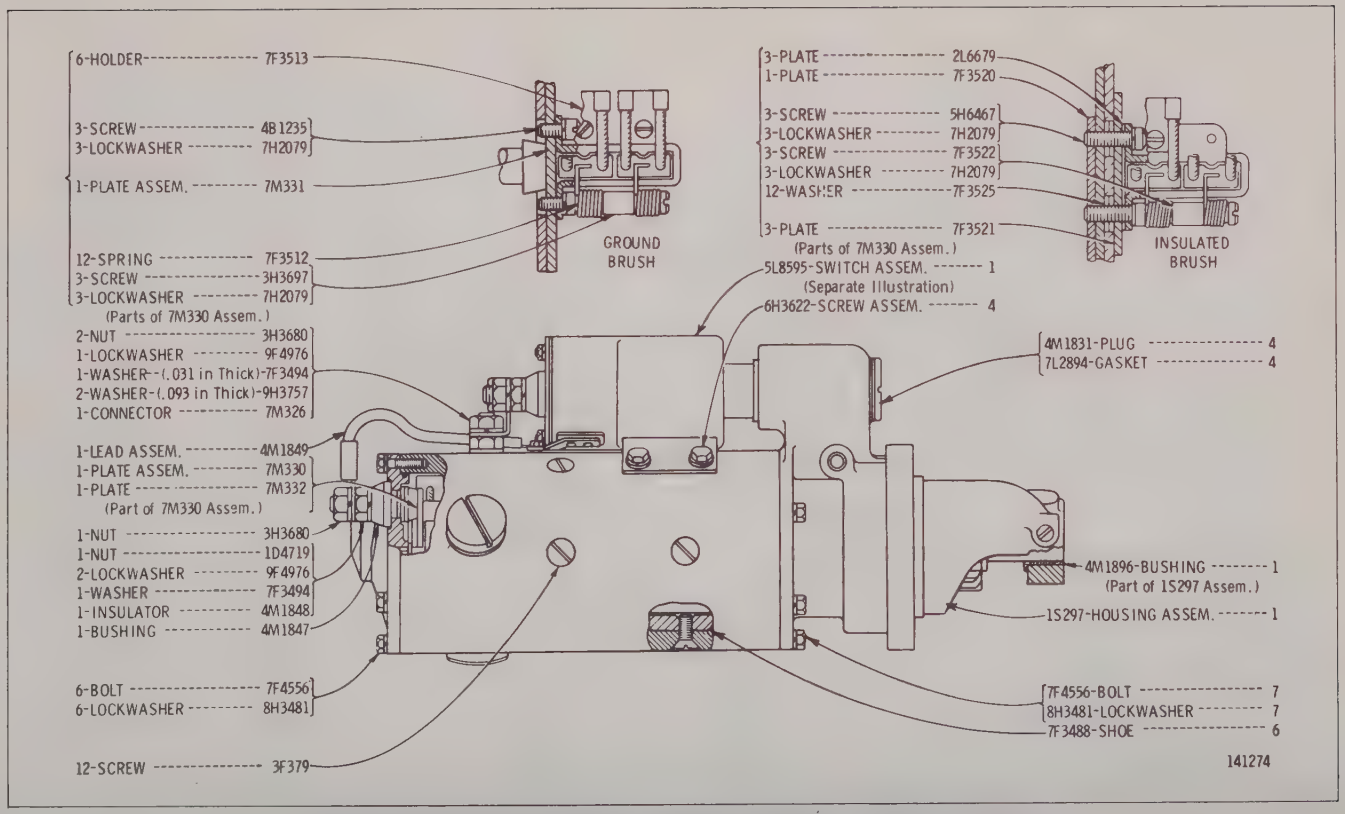

5L4405 ELECTRIC STARTING MOTOR ASSEMBLY—32 Volt—R.H.—Part 1—Type 3
Only separate parts serviced. When complete Assembly is required order 8L8204 shown on Pages 112B and 112C
Part of 6L2747 Electric Starting Group shown on Page 106. 5L8595 Switch parts are shown on Page 105

5L4405 ELECTRIC STARTING MOTOR ASSEMBLY—32 Volt—R.H.—Part 2—Type 3
Only separate part serviced. When complete Assembly is required order 8L8204 shown on Pages 112B and 112C
Part of 6L2747 Electric Starting Group shown on Page 106

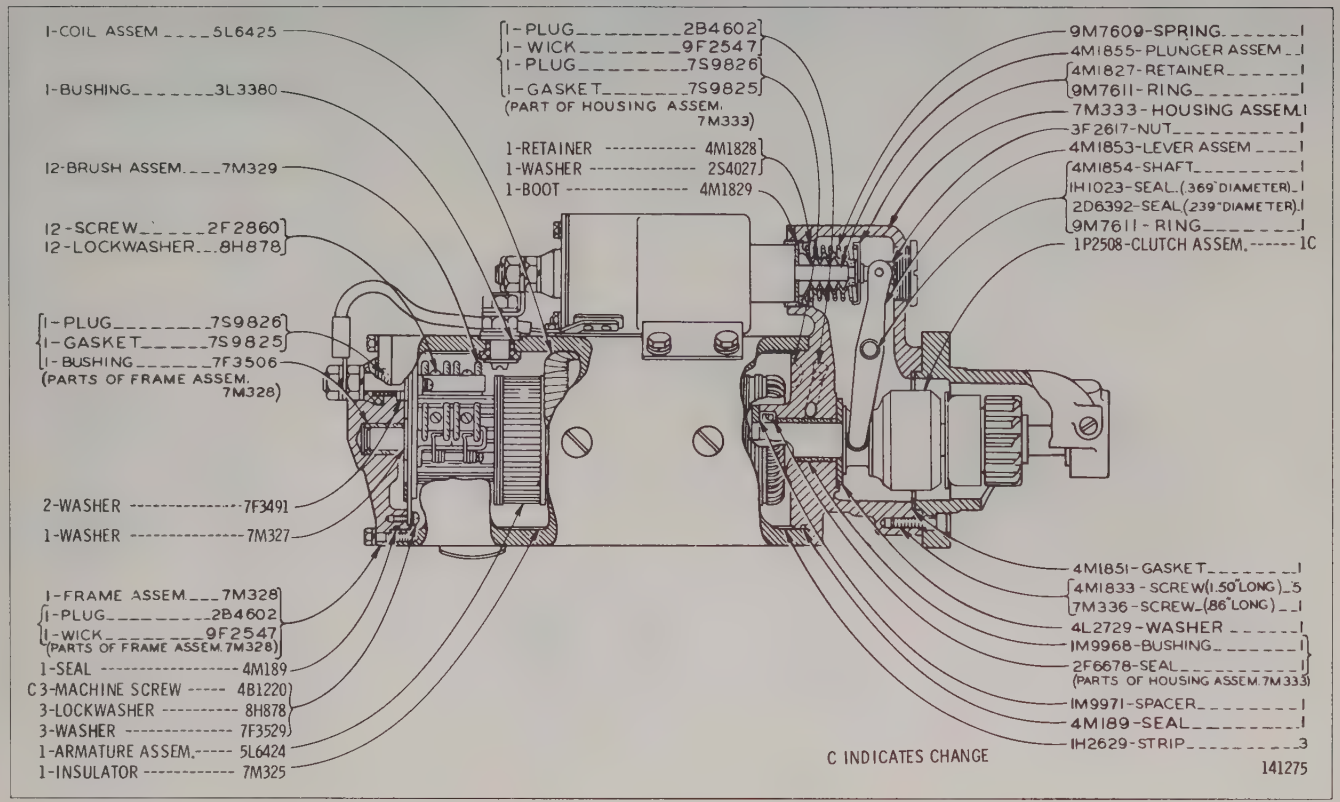

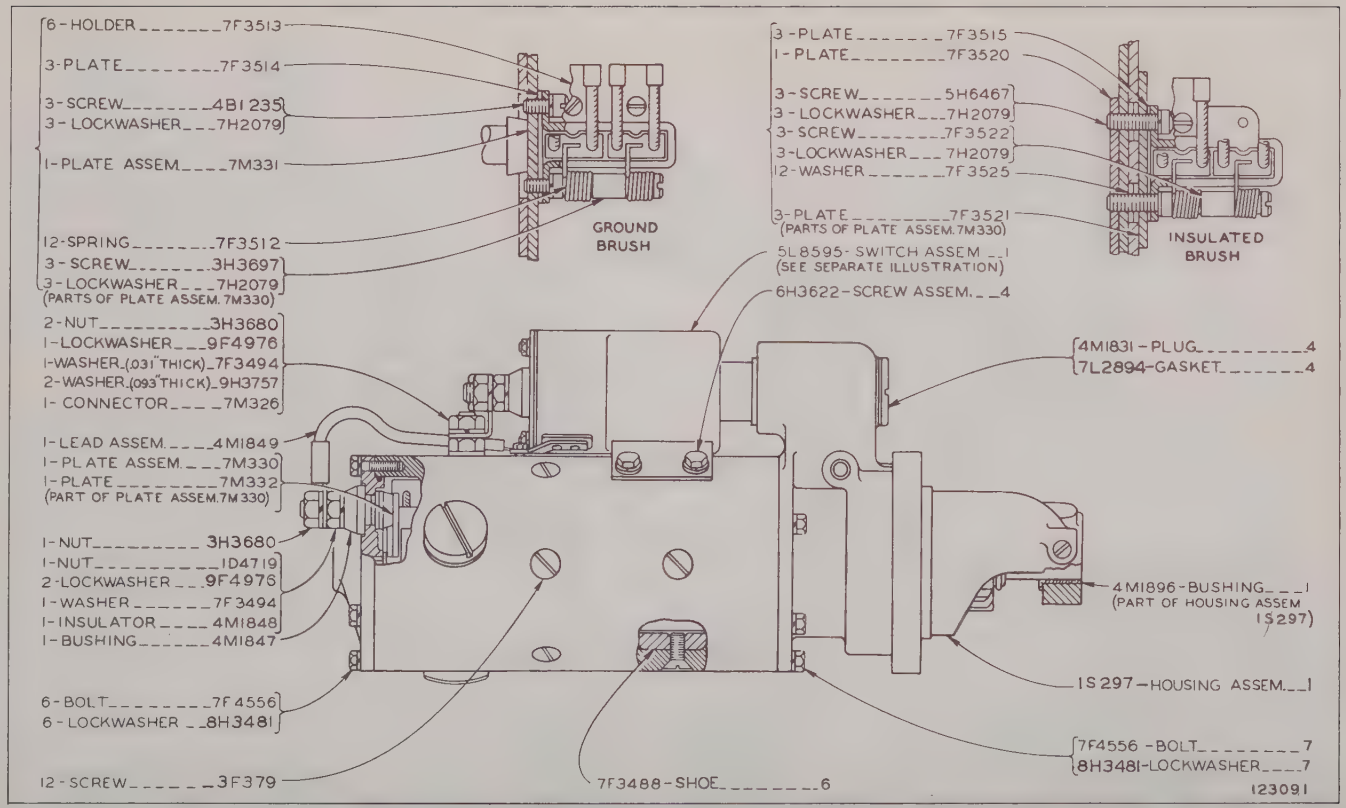

8L5939 MOTOR ASSEMBLY—32 Volt—R.H.—Part 1—Type 1

Only separate parts serviced. When complete Assembly is required order 8L5937 shown on Pages 112, 112A, 112A-1 and 112A-2. Part of 6L2747 Electric Starting Group shown on Page 106A. 5L8595 Switch parts are shown on Page 105

8L5939 MOTOR ASSEMBLY—32 Volt—R.H.—Part 2—Type 1
Only separate parts serviced. When complete Assembly is required order 8L5937 shown on Pages 112, 112A, 112A-1 and 112A-2. Part of 6L2747 Electric Starting Group shown on Page 106A

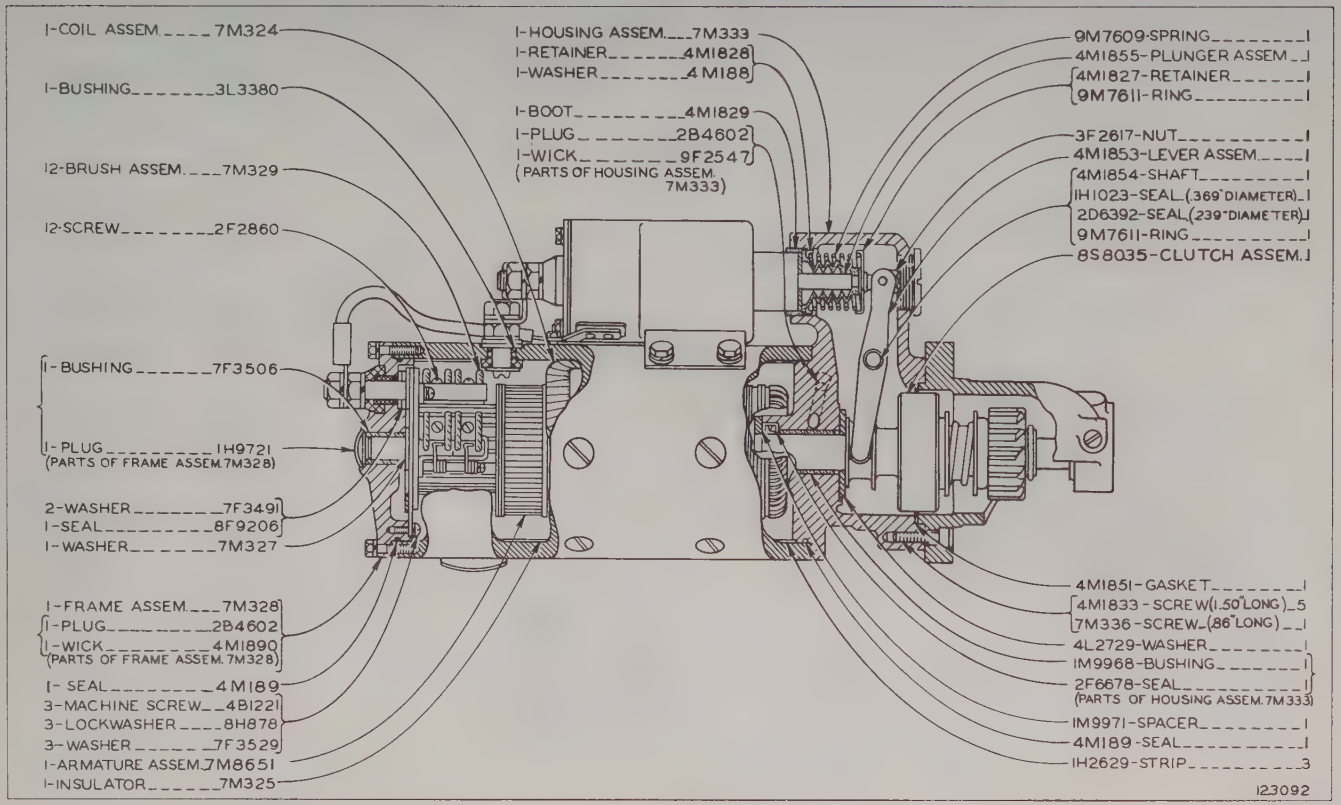

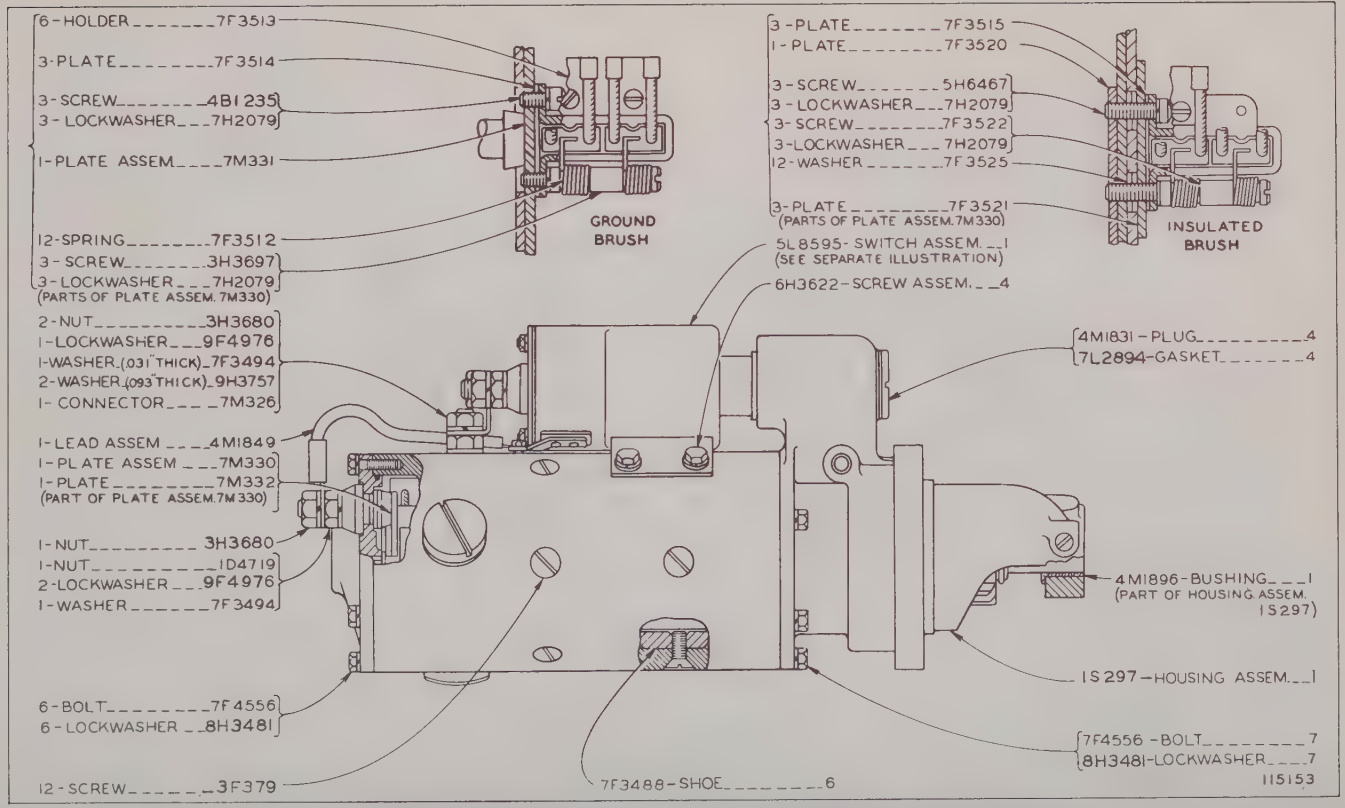

8L5939 MOTOR ASSEMBLY—32 Volt—R.H.—Part 1—Type 2

Only separate parts serviced. When complete Assembly is required order 8L5937 shown on Pages 112, 112A, 112A-1 and 112A-2. Part of 6L2747 Electric Starting Group shown on Page 106A. 5L8595 Switch parts are shown on Page 105

8L5939 MOTOR ASSEMBLY—32 Volt—R.H.—Part 2—Type 2
Only separate parts serviced
When complete Assembly is required order 8L5937 shown on Page 112, 112A, 112A-1 and 112A-2
Part of 6L2747 Electric Starting Motor Group shown on Page 106A

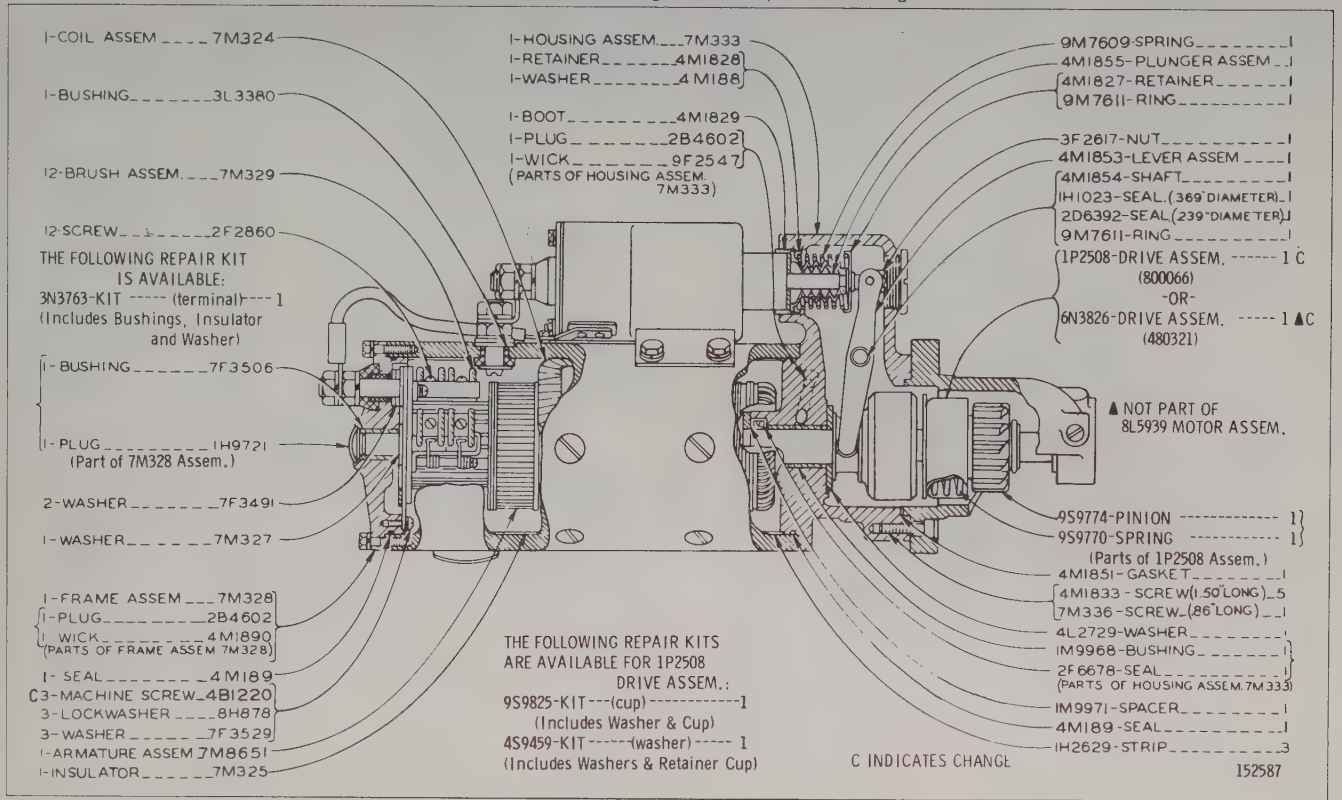

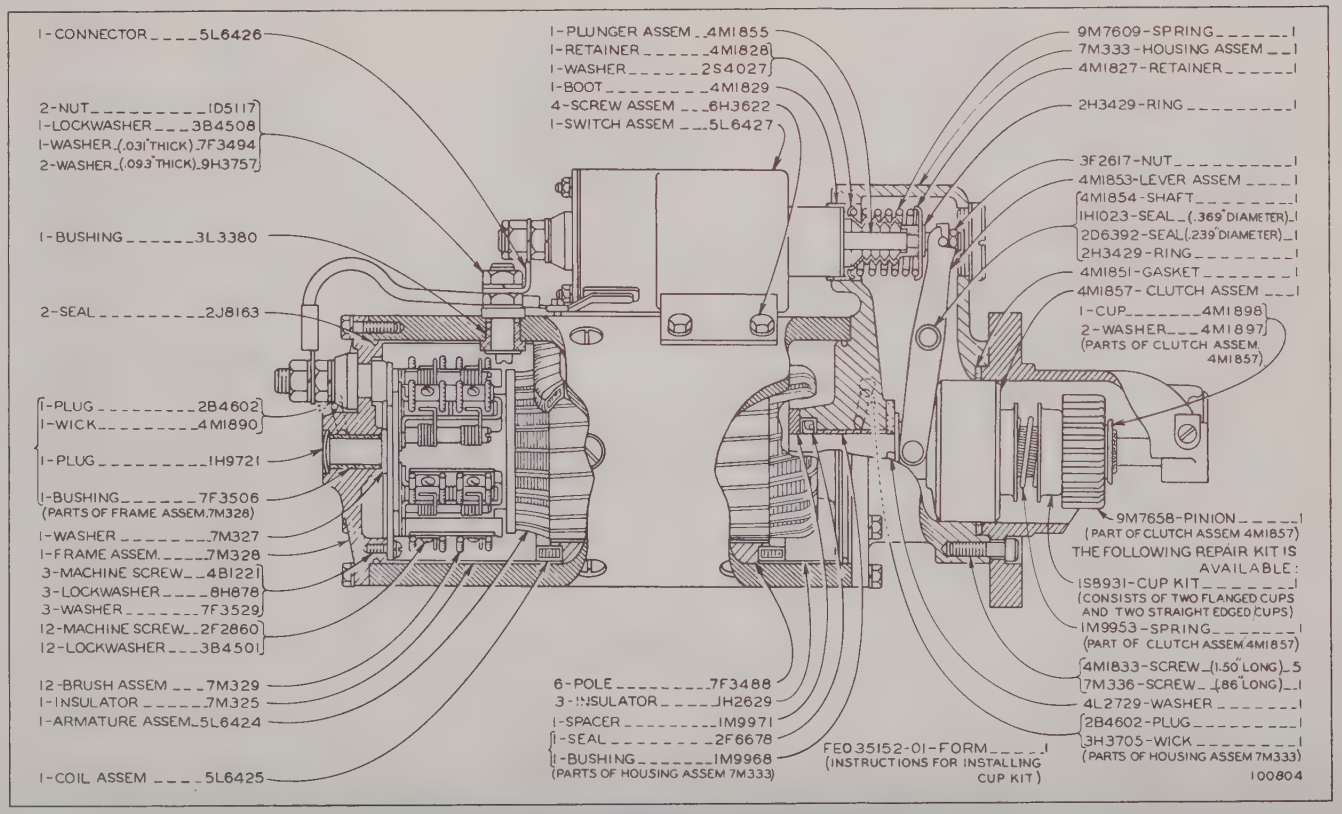

5L5354 MOTOR ASSEMBLY—32 Volt—L.H.—Part 1

Part of 6L2747 Electric Starting Group shown on Page 106

Only separate parts serviced. When complete Assembly is required order 8L8204 shown on Pages 112B and 112C

5L5354 MOTOR ASSEMBLY—32 Volt—L.H.—Part 2
Part of 6L2747 Electric Starting Group shown on Page 106
Only separate parts serviced. When complete Assembly is required order 8L8204 shown on Pages 112B and 112C

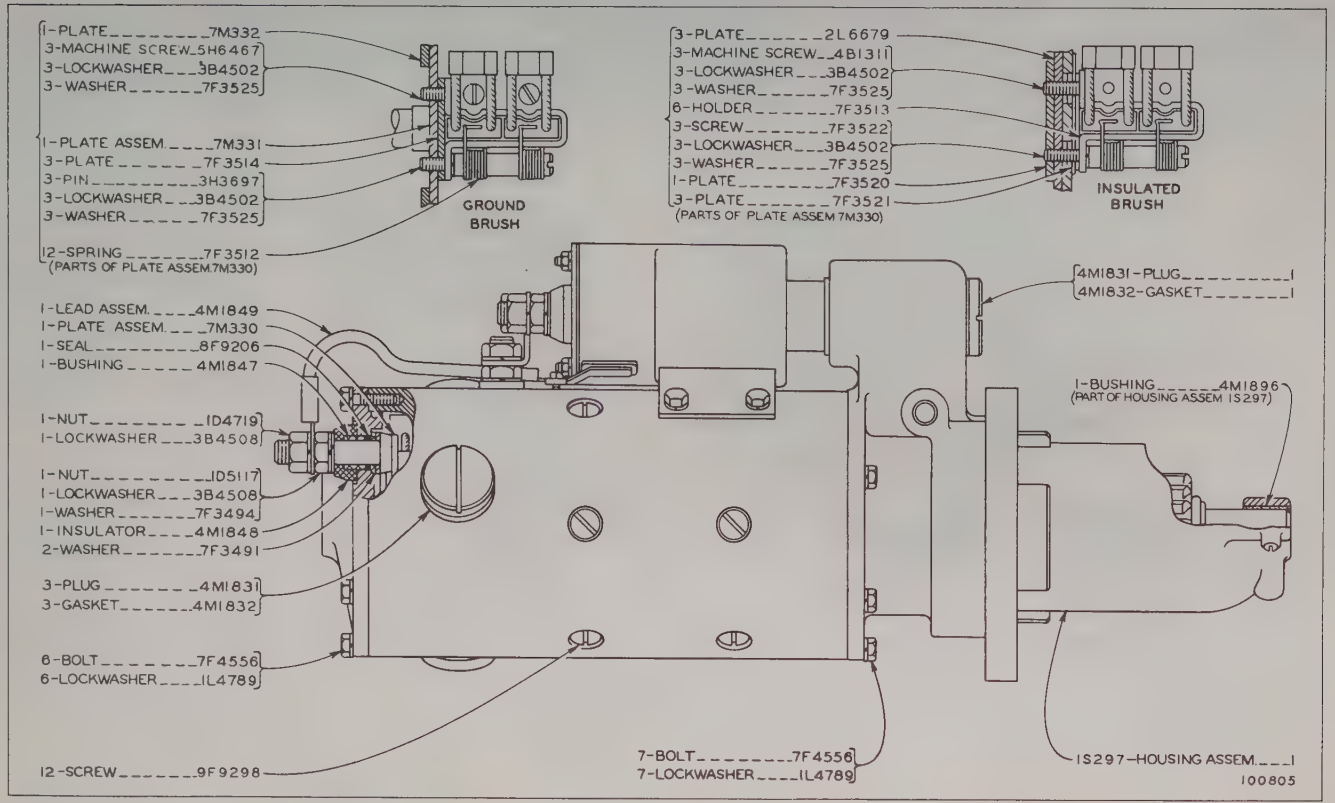

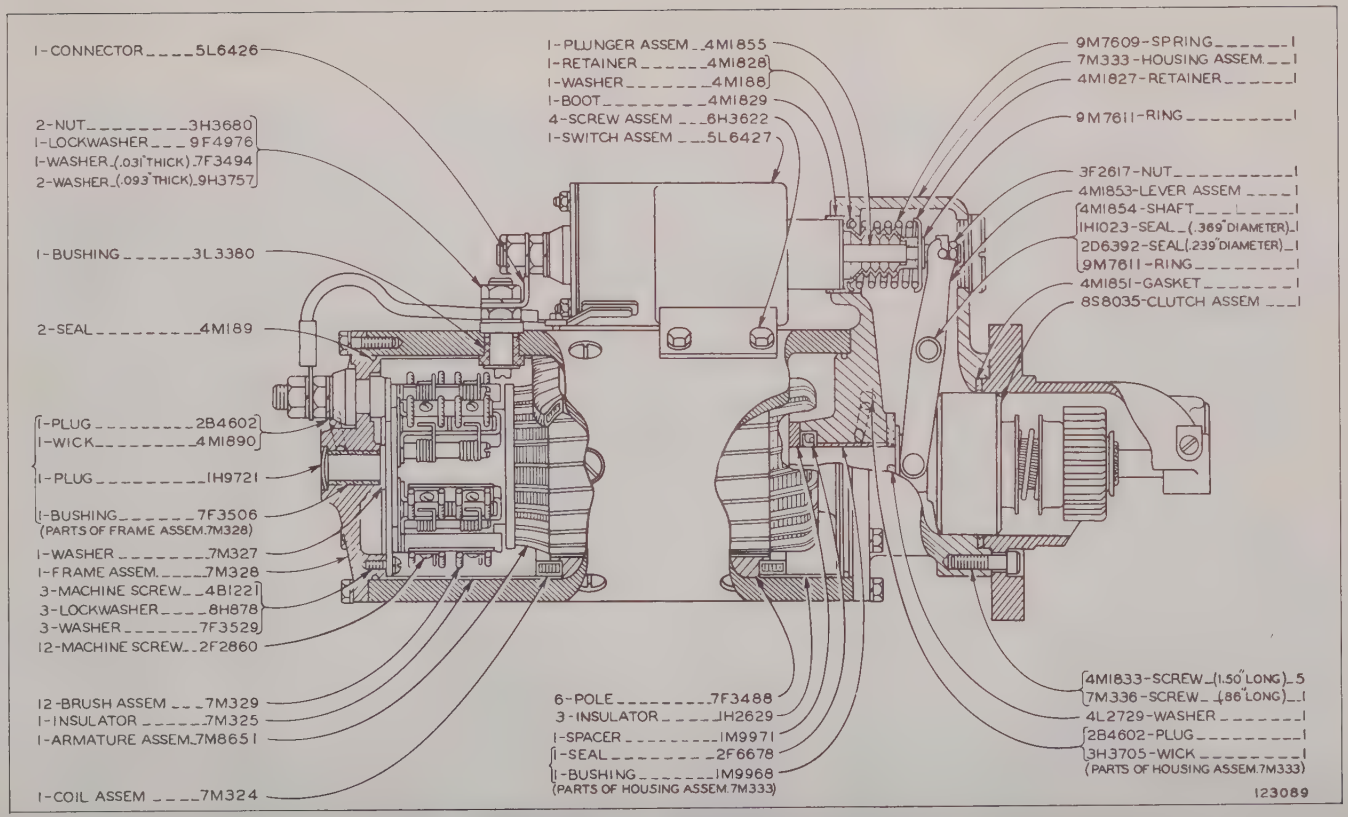

8L5937 MOTOR ASSEMBLY—32 Volt—L.H.—Part 1
Part of 6L2747 Electric Starting Group shown on Page 106A
Provides Field Replacement for 8L5939 Motor Assembly shown on Pages 108D through 109B

8L5937 MOTOR ASSEMBLY—32 Volt—L.H.—Part 2
Part of 6L2747 Electric Starting Group shown on Page 106A
Provides Field Replacement for 8L5939 Motor Assembly shown on Pages 108D through 109B

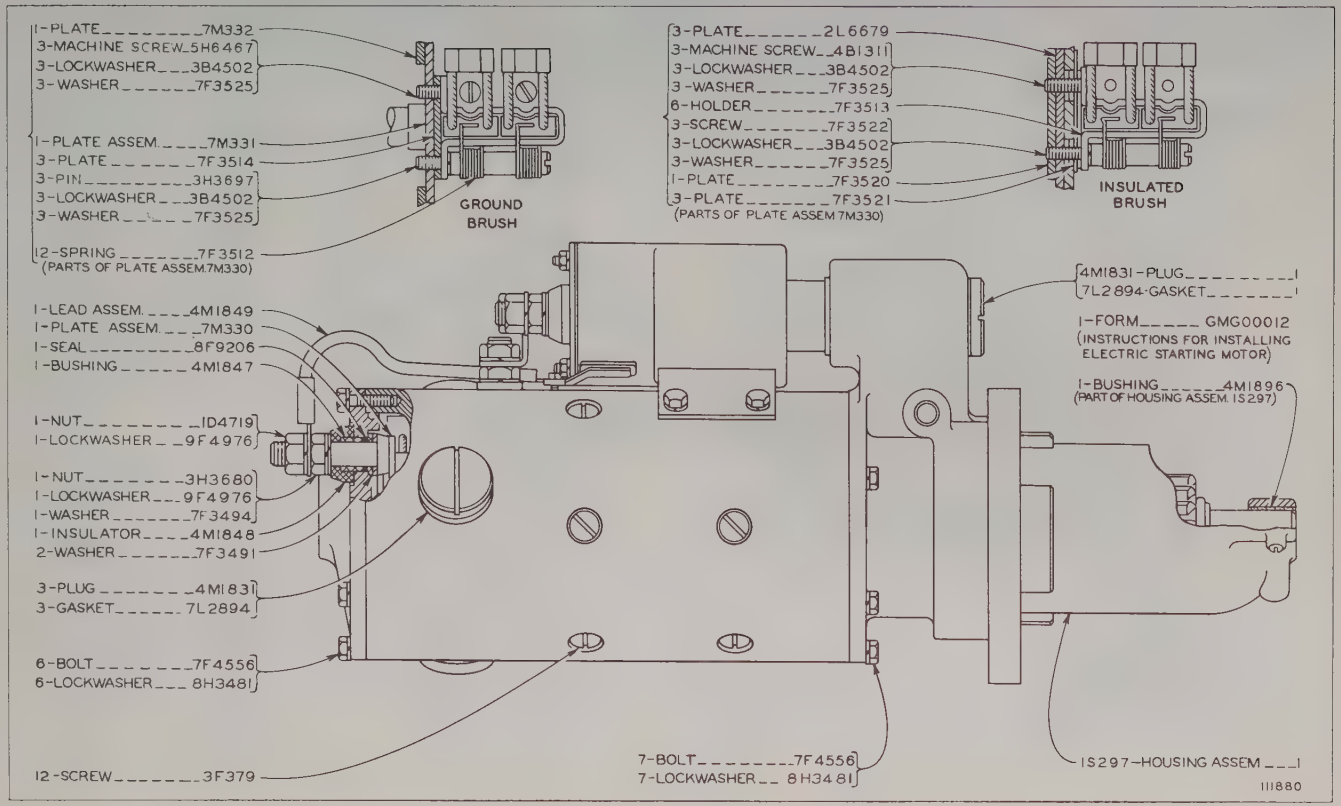

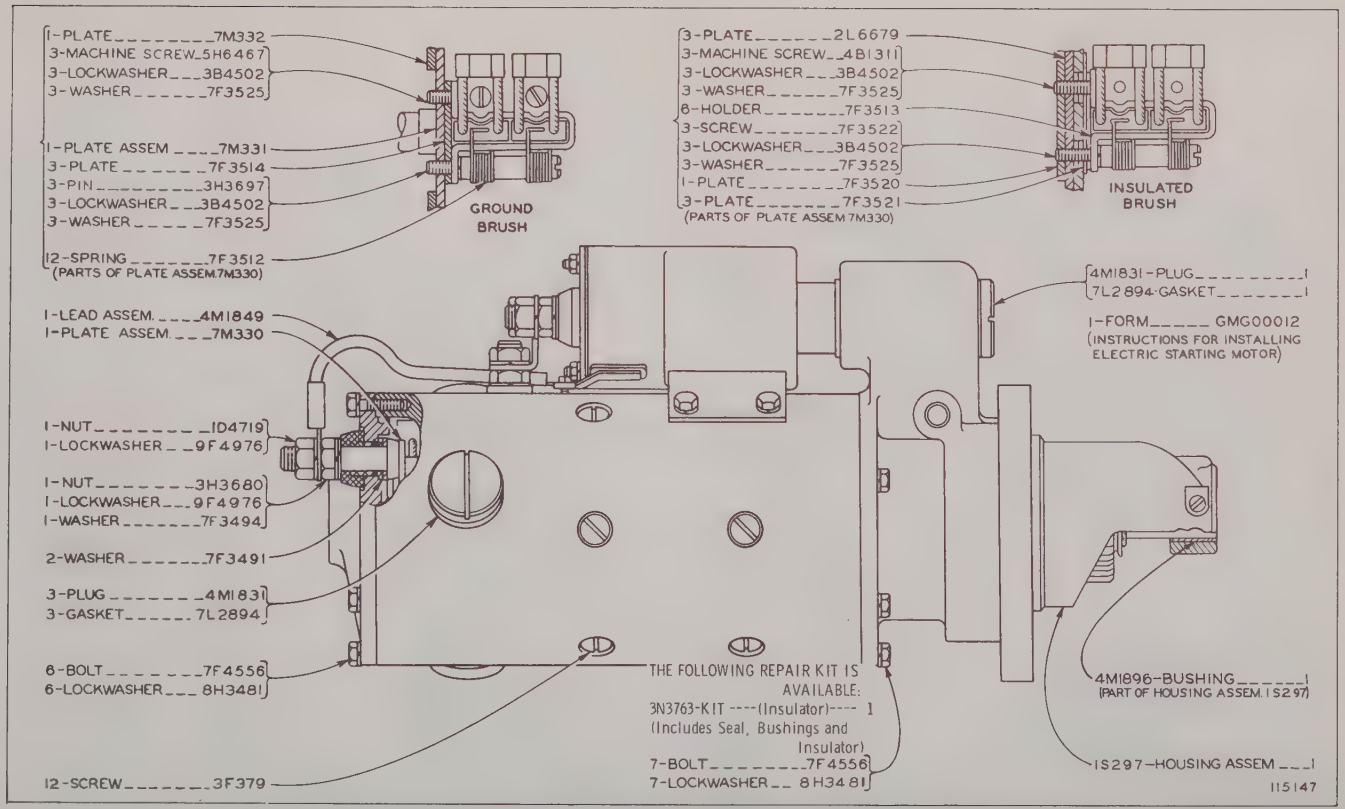

8L5937 MOTOR ASSEMBLY—32 Volt—L.H.—Part 1—Type 2
Part of 6L2747 Electric Starting Group shown on Page 106A

8L5937 MOTOR ASSEMBLY—32 Volt—L.H.—Part 2—Type 2
Part of 6L2747 Electric Starting Group shown on Page 106A

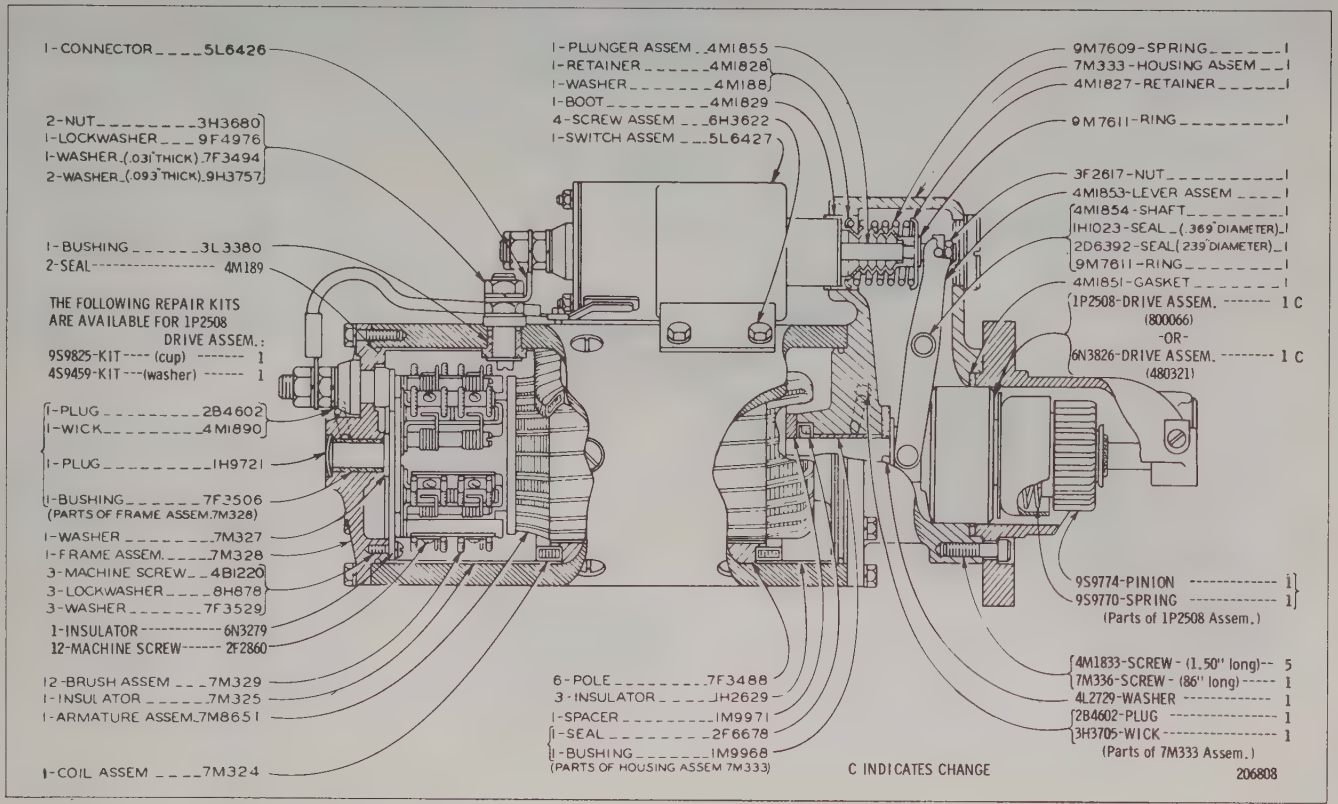

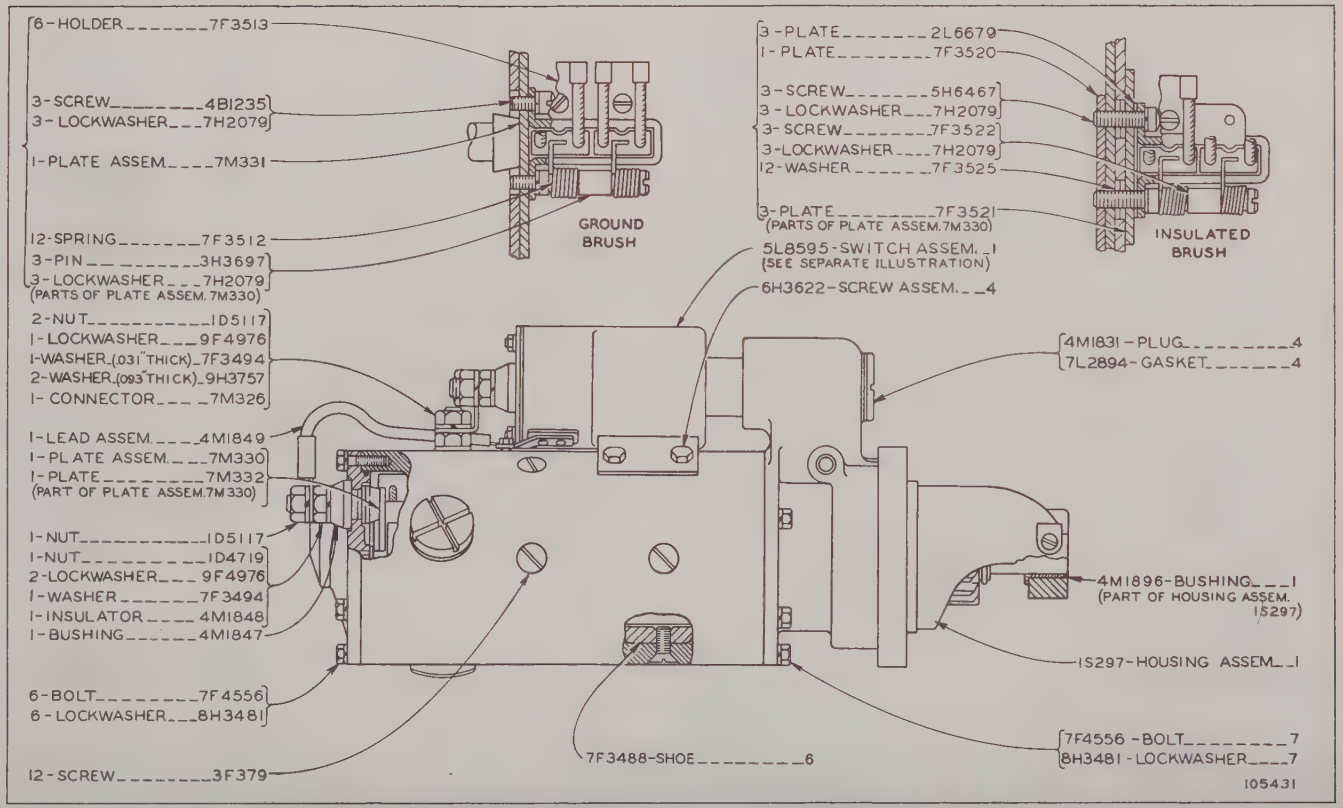

8L8204 ELECTRIC STARTING MOTOR ASSEMBLY—32 Volt—R.H. & L.H.—Part 1

5L8595 Switch parts are shown on Page 105

8L8204 ELECTRIC STARTING MOTOR ASSEMBLY—32 Volt—R.H. & L.H.—Part 2

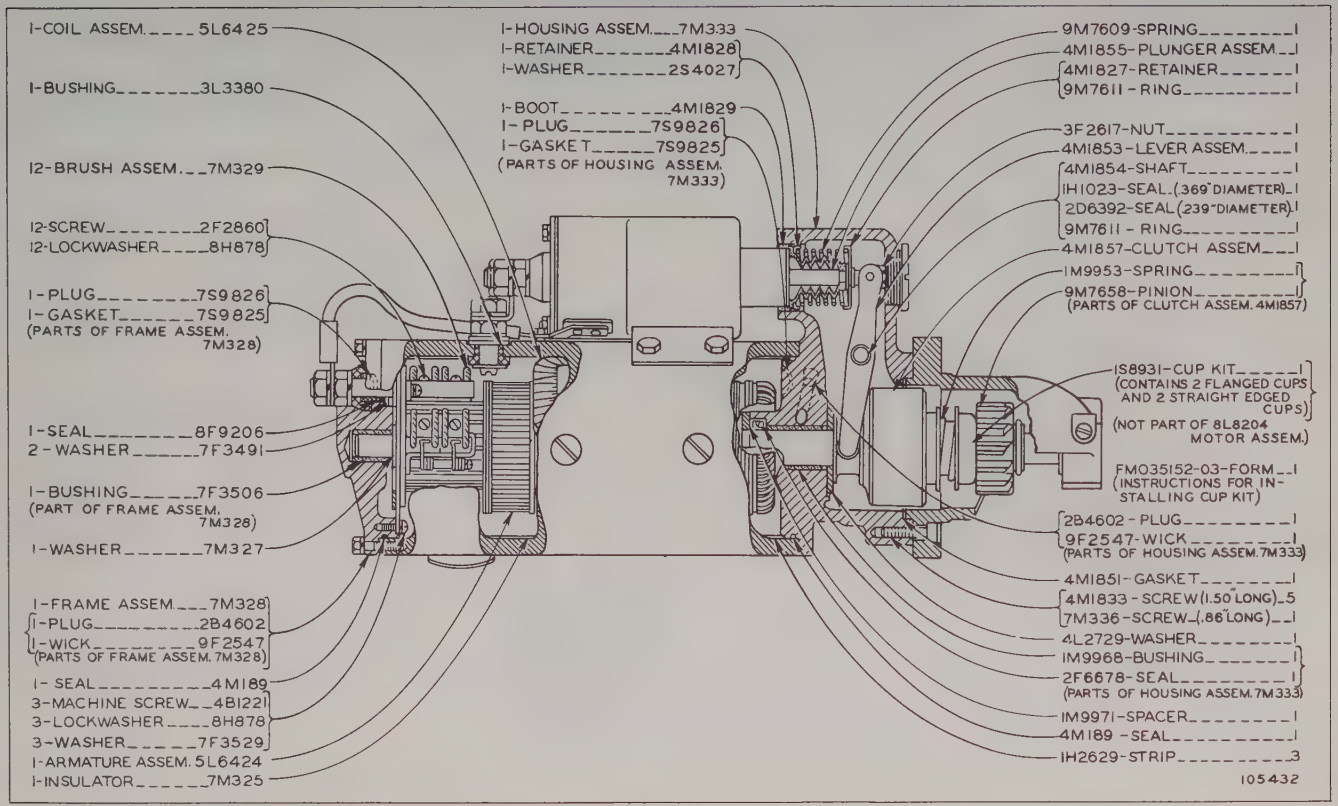

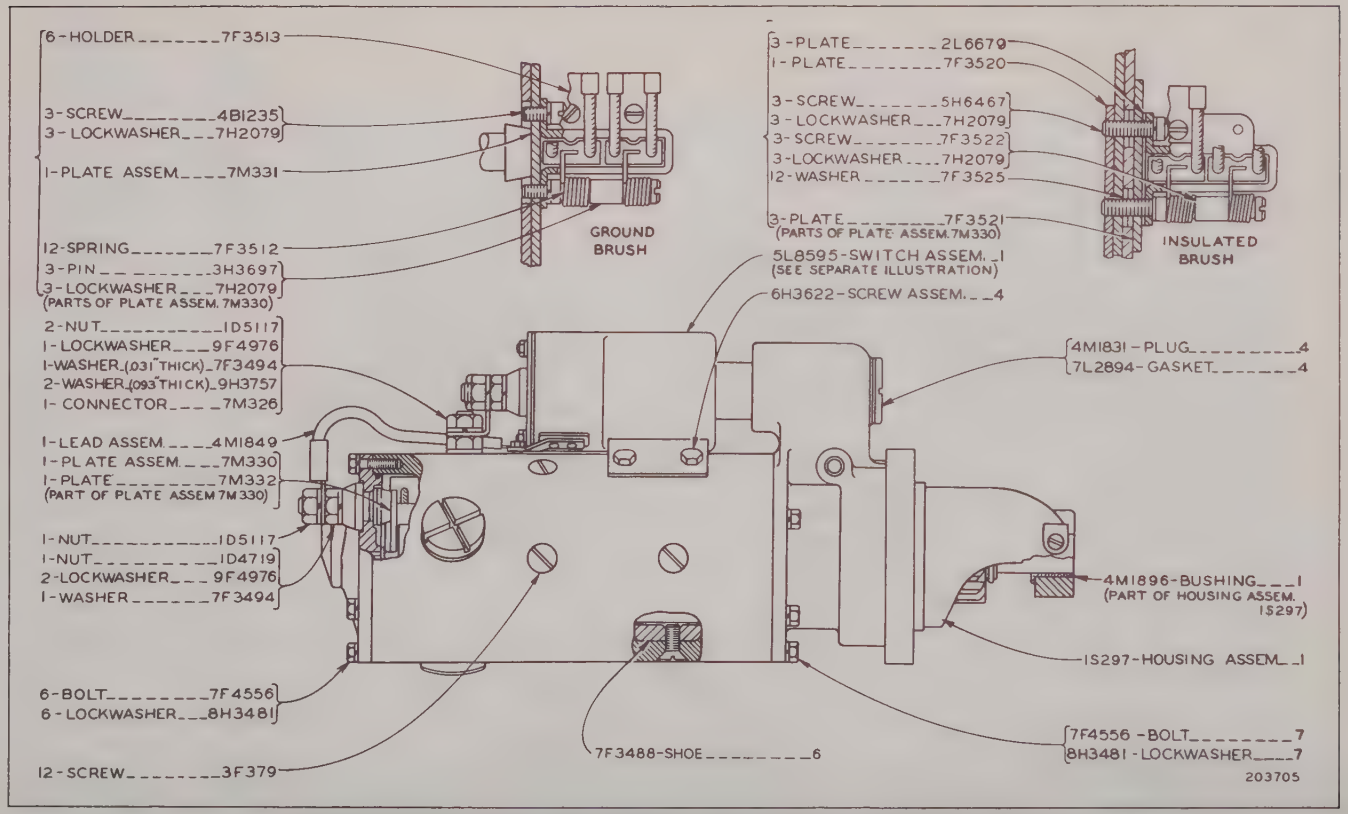

8L8204 ELECTRIC STARTING MOTOR ASSEMBLY—32 Volt—R.H. and L.H.—Part 1—Type 2

5L8595 Switch parts are shown on Page 105

8L8204 ELECTRIC STARTING MOTOR ASSEMBLY—32 Volt—R.H. and L.H.—Part 2—Type 2

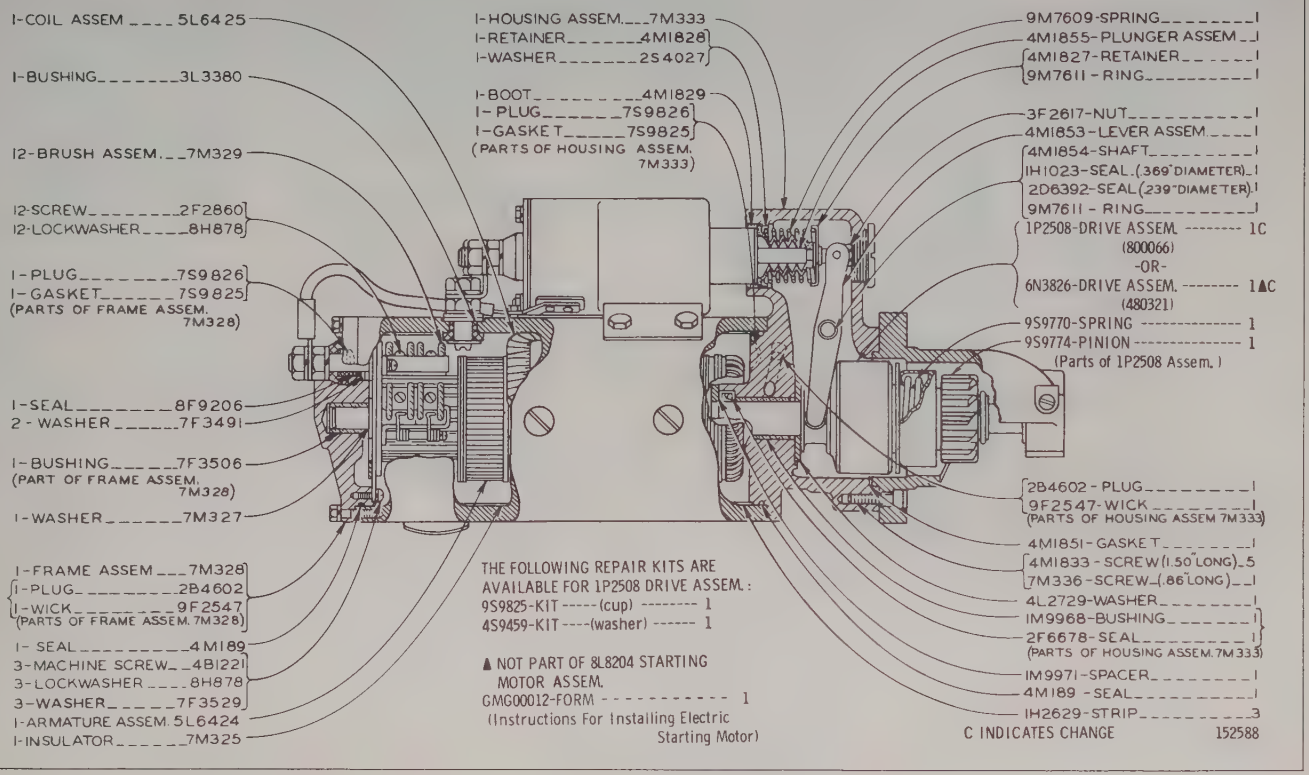

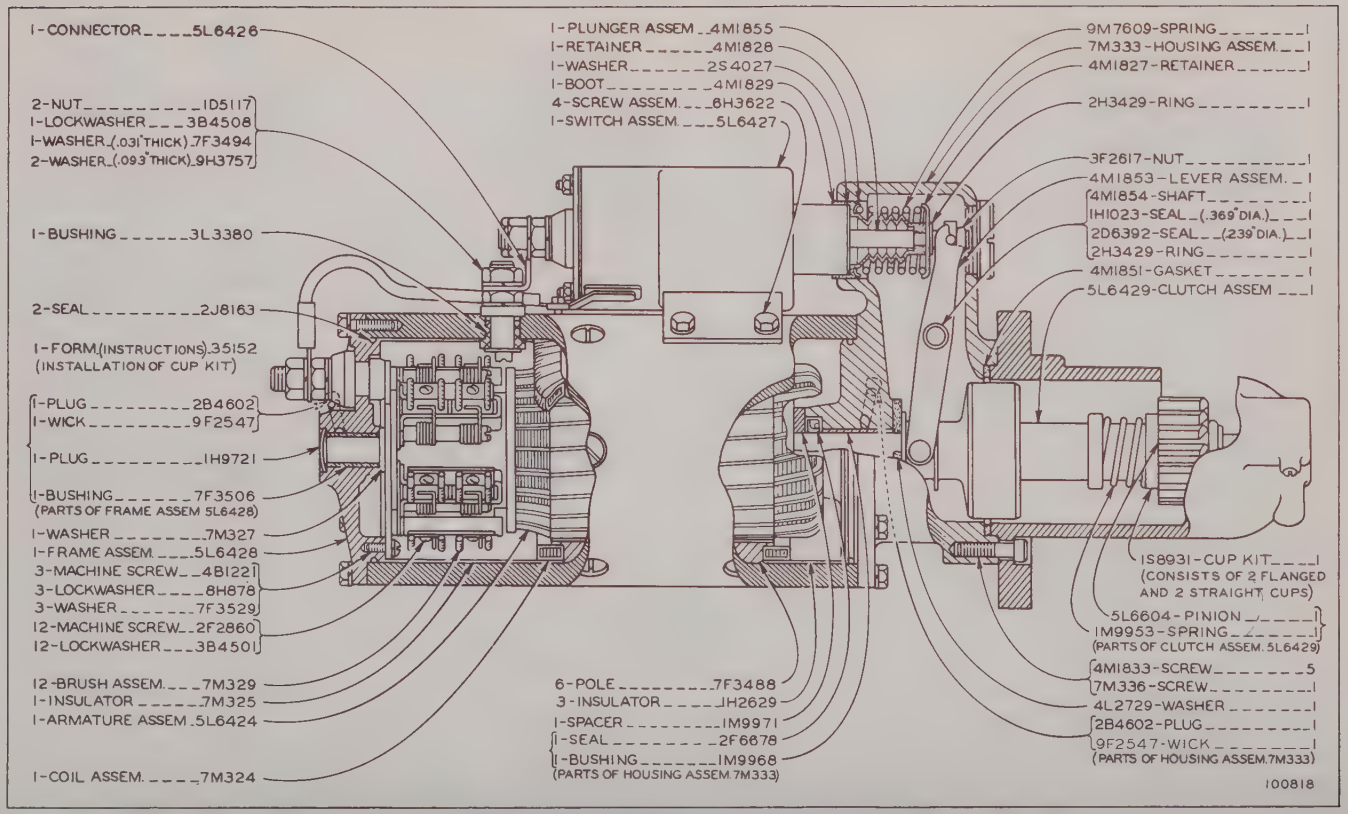

5L7268 MOTOR ASSEMBLY—32 Volt—R.H.—Part 1
5L5382 MOTOR ASSEMBLY—32 Volt—L.H.—Part 1
Part of 6L2748 Electric Starting Group shown on Page 106B
Only separate parts serviced. When complete Assembly is required order 8L6205 shown on Pages 112F and 113

5L7268 MOTOR ASSEMBLY—32 Volt—R.H.—Part 2
5L5382 MOTOR ASSEMBLY—32 Volt—L.H.—Part 2
Part of 6L2748 Electric Starting Group shown on Page 106B
Only separate parts serviced. When complete Assembly is required order 8L6205 shown on Pages 112F and 113

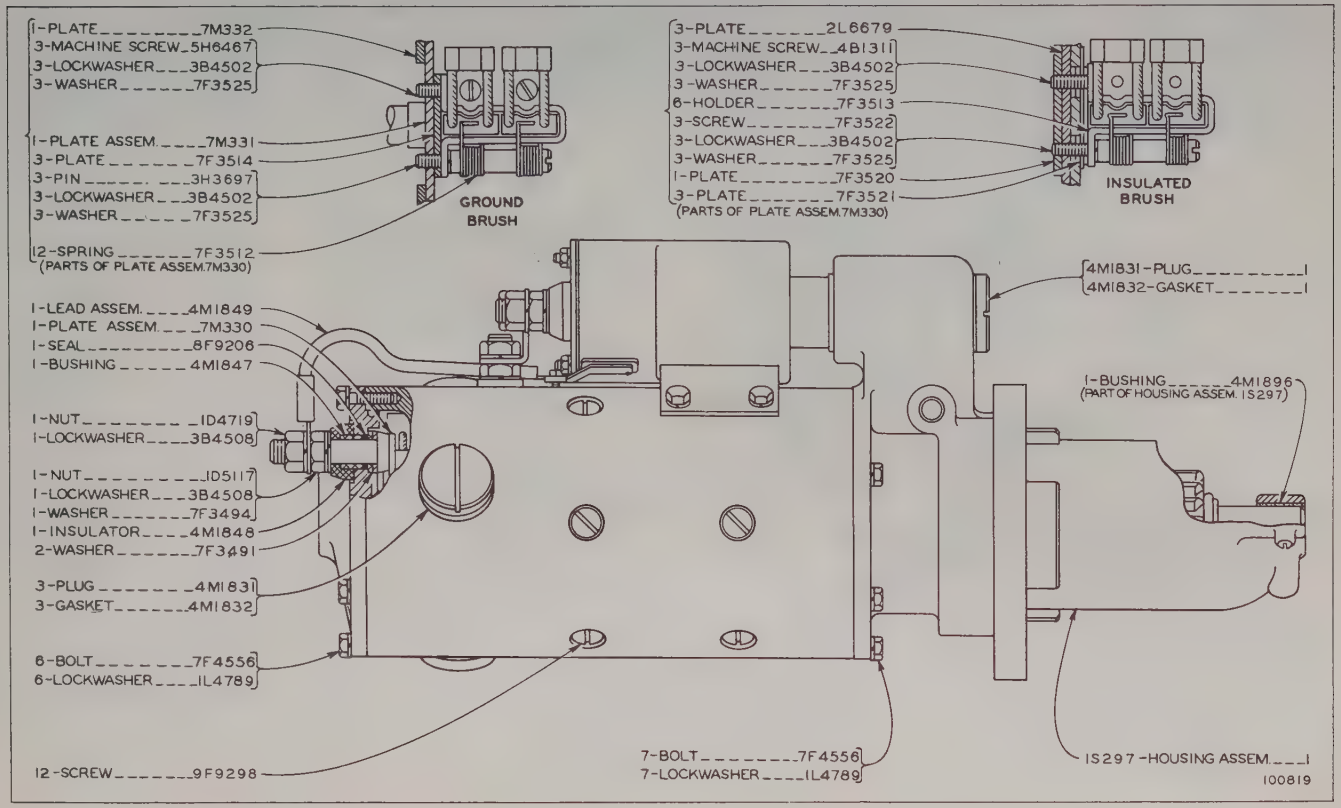

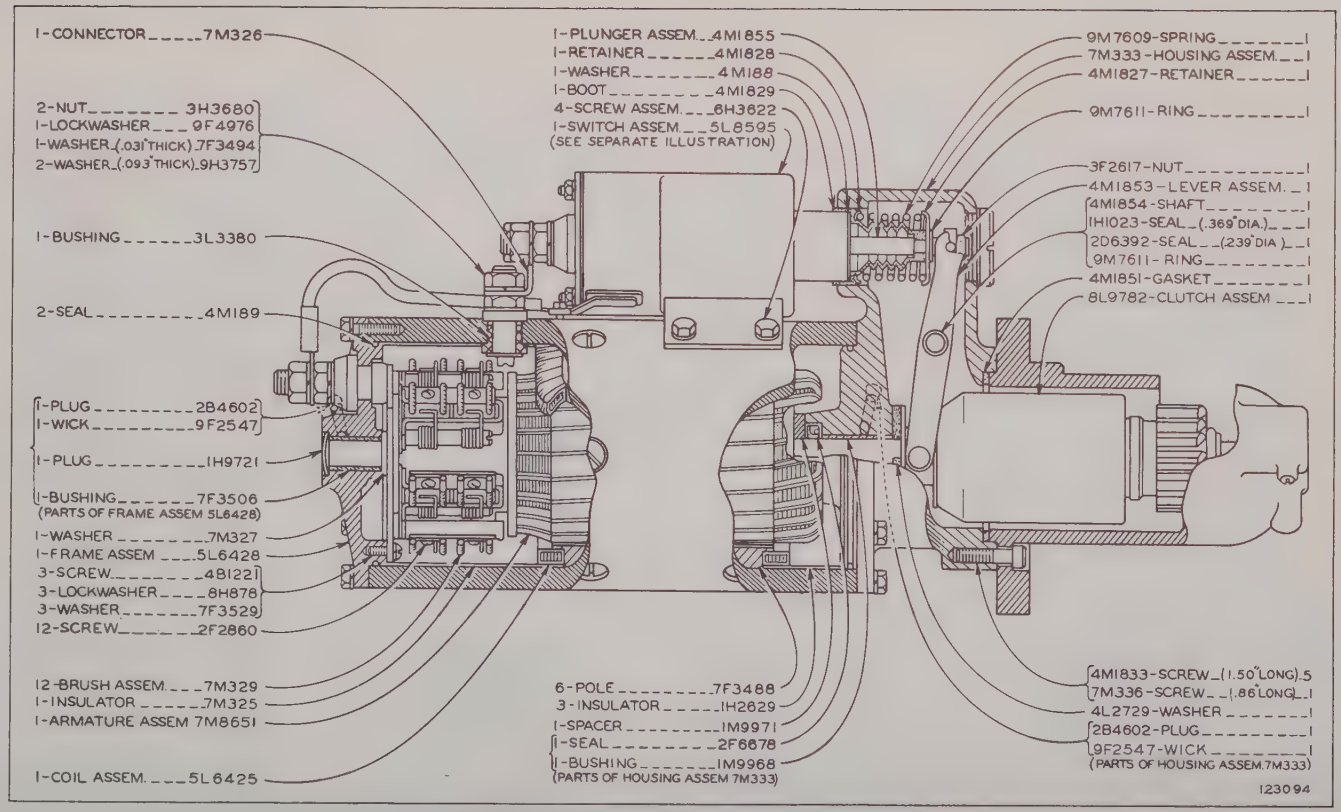

8L6205 MOTOR ASSEMBLY—32 Volt—R.H. & L.H.—Part 1
Part of 6L2748 Electric Starting Group shown on Page 107
5L8595 Switch parts are shown on Page 105

8L6205 MOTOR ASSEMBLY—32 Volt—R.H. & L.H.—Part 2

Part of 6L2748 Electric Starting Group shown on Page 107

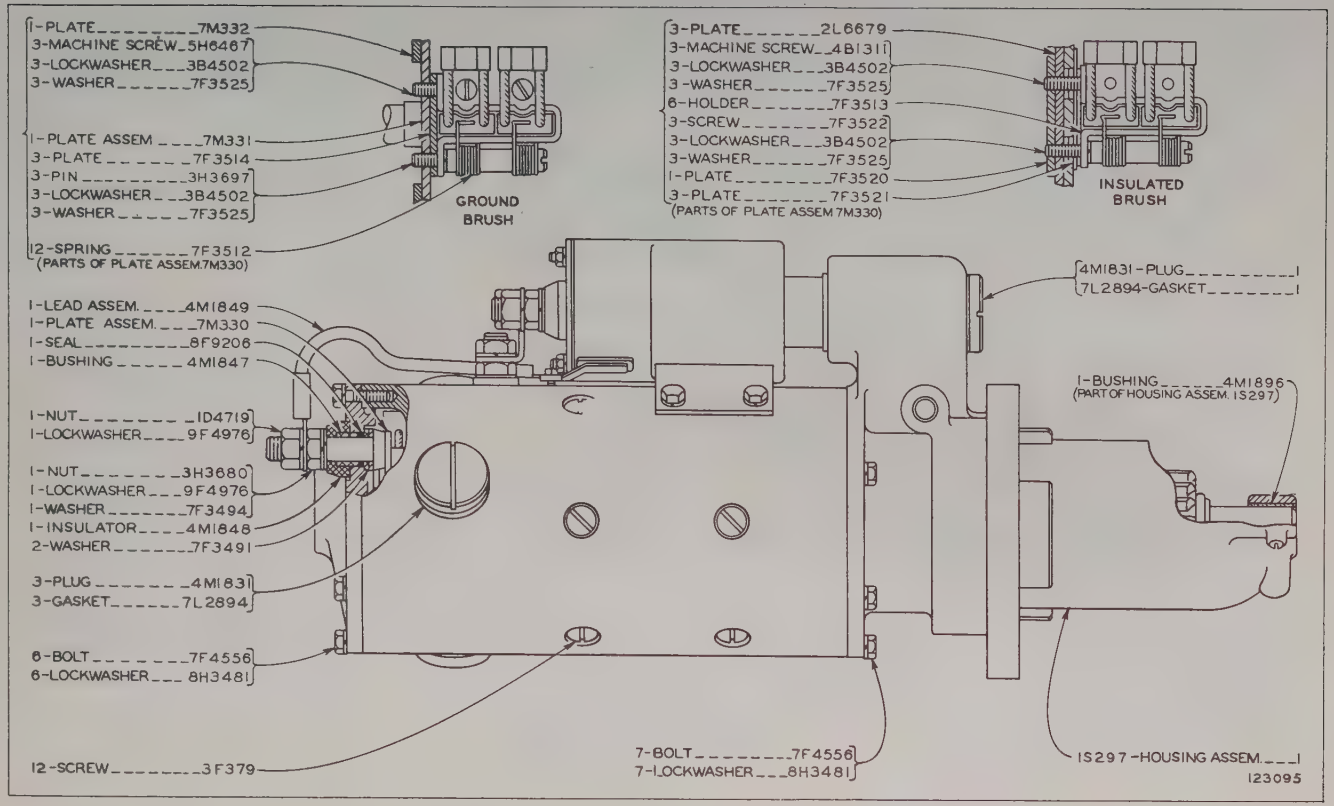

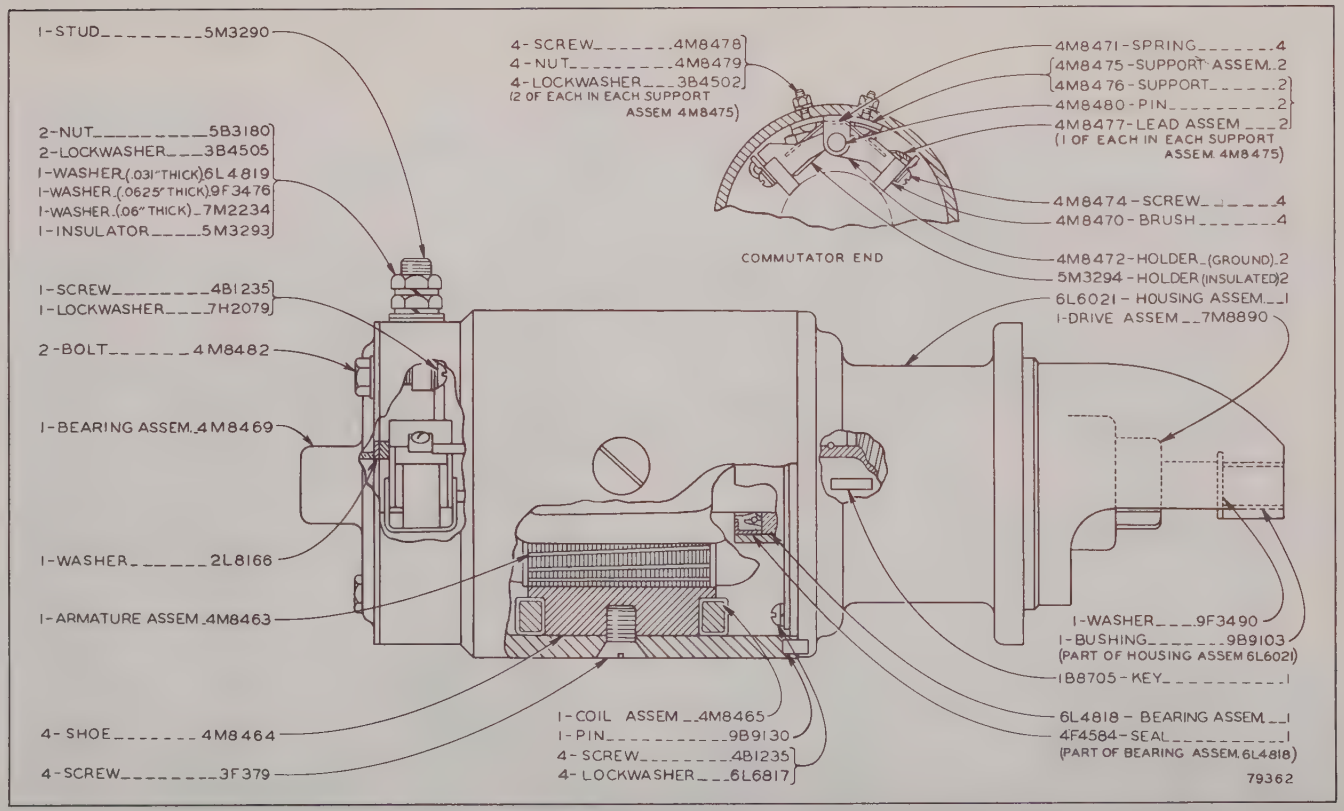

6L4665 ELECTRIC MOTOR ASSEMBLY—12 Volt

Part of 6L5978 Electric Starting Group shown on Page 105

5L7305 STARTING AID GLOW PLUG GROUP—32 Volt—Type 2

C INDICATES CHANGE FROM PREVIOUS TYPE

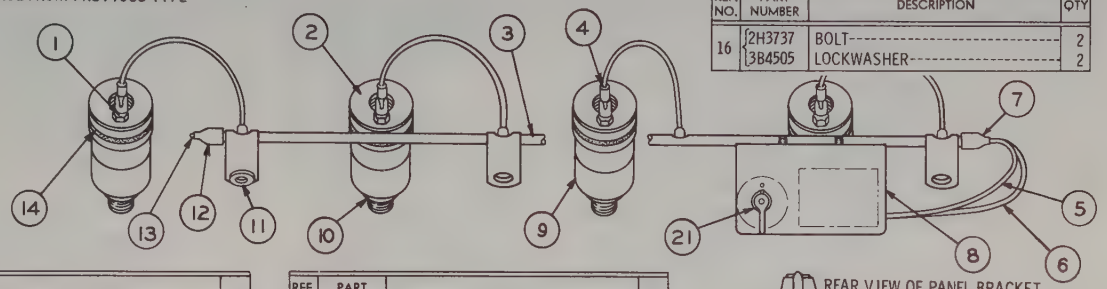

REF. NO.	PART NUMBER	DESCRIPTION	QTY
16	2H3737	BOLT	2
	3B4505	LOCKWASHER	2

REF. NO.	PART NUMBER	DESCRIPTION	QTY
	6L4407	WIRING KIT GROUP	1
		Consisting of:	
	6B2501	WIRE—(6 Gauge)—10 feet	1
	6B2500	WIRE—(10 Gauge)—5 feet	1
C	4S8787	WIRE—(14 Gauge)—2 feet	1
	6L4408	SPLICE	1
	2L9724	CLIP	5
C	2L8049	TERMINAL—(No. 10 Screw)	1
C	2L8051	TERMINAL—(5/16" Screw)	1
	2L8052	TERMINAL—(3/8" Screw)	2
C	2L8054	TERMINAL—(1/2" Screw)	3
		(Used with No. 6 Wire)	
C	2L8066	TERMINAL—(No. 10 Screw)	4
		(Used with No. 10 Wire)	
C	2L8076	TERMINAL—(No. 10 Screw)	2
		(Used with No. 14 Wire)	
C	8L8413	TIE—(5.5" long)	4
C	3S2093	TIE	1
	9F8292	CONNECTOR—( )	1
	9F8294	CONNECTOR—( )	1
C 1	4S7832	GLOW PLUG	8

REF. NO.	PART NUMBER	DESCRIPTION	QTY
2	2L7142	RETAINER	8
C 3	7L4720	LEAD ASSEM.	2
4	2M5301	TERMINAL	8
		(4 in each 7L4720 Lead Assem.)	
C 5	7L6612	WIRE ASSEM.	1
C 6	7L6613	WIRE ASSEM.	1
7	7L6614	SHELL	2
	3M6018	TERMINAL	2
	2R1033	WASHER	2
		(1 each in 7L6612 & 7L6613 Wire Assem.)	
C 8	7L6462	BRACKET ASSEM.	1
9	5L6039	CHAMBER ASSEM.	8
10	5H1012	GASKET—(.125" Thick)	8
	5H9792	GASKET—(.163" Thick)	8
C 11	4B4280	WASHER	6
C 12	7L6614	SHELL	2
C 13	7L8212	PLUG	2
14	6F8146	RING	8
	1B4330	NUT	2
15	3B4504	LOCKWASHER	2
	4B4276	WASHER	2

REAR VIEW OF PANEL BRACKET

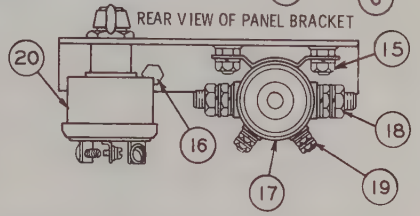

REF. NO.	PART NUMBER	DESCRIPTION	QTY
C 17	9F3099	SWITCH—(Magnetic)	1
18	4F2294	NUT	2
	8F908	WASHER	2
	4M62	LOCKWASHER	2
19	4B2043	NUT	2
	3B4501	LOCKWASHER	2
		(Parts of 9F3099 Switch)	
20	2S2342	SWITCH ASSEM.	1
21	8F3437	LEVER	1
	5L7200	SCREW	1
	3B4501	LOCKWASHER	1
		(Parts of 2S2342 Switch Assem.)	

105206

C INDICATES CHANGE FROM PREVIOUS TYPE

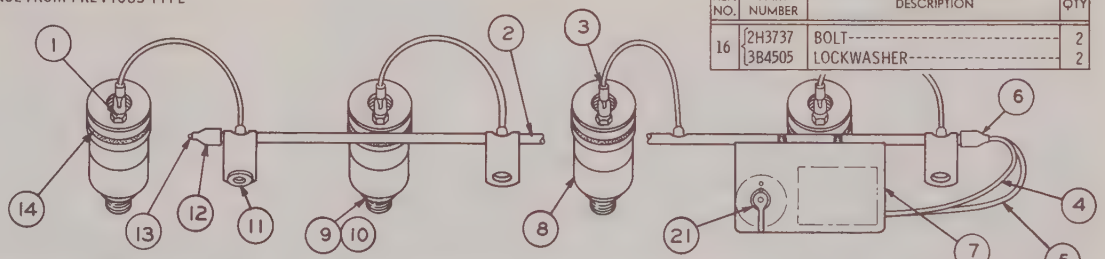

REF. NO.	PART NUMBER	DESCRIPTION	QTY
16	2H3737	BOLT	2
	3B4505	LOCKWASHER	2

REF. NO.	PART NUMBER	DESCRIPTION	QTY
	6L4407	WIRING KIT GROUP	1
		Consisting of:	
	6B2501	WIRE------(6 Gauge)-----10 feet	1
	6B2500	WIRE-----(10 Gauge)------5 feet	1
	4S8787	WIRE-----(14 Gauge)------2 feet	1
	6L4408	SPLICE	1
	2L9724	CLIP	5
	2L8049	TERMINAL----(No. 10 Screw)	1
	2L8051	TERMINAL-----(5/16" Screw)	1
	2L8052	TERMINAL-----(3/8" Screw)	2
	2L8054	TERMINAL-----(1/2" Screw)	3
		(Used with No. 6 Wire)	
	2L8066	TERMINAL----(No. 10 Screw)----	4
		(Used with No. 10 Wire)	
	2L8076	TERMINAL----(No. 10 Screw)----	2
		(Used with No. 14 Wire)	
	8L8413	TIE-------- (5.5" long)	4
	3S2093	TIE	1
	9F8292	CONNECTOR------( )	1
	9F8294	CONNECTOR------( )	1

REF. NO.	PART NUMBER	DESCRIPTION	QTY
1	4S7832	GLOW PLUG	8
2	7L4720	LEAD ASSEM.	2
3	2M5301	TERMINAL	8
		(4 in each 7L4720 Lead Assem.)	
4	7L6612	WIRE ASSEM.	1
5	7L6613	WIRE ASSEM.	1
6	7L6614	SHELL	2
	3M6018	TERMINAL	2
	2R1033	WASHER	2
		(1 each in 7L6612 & 7L6613 Wire Assem.)	
7	7L6462	BRACKET ASSEM.	1
C 8	8S3617	CHAMBER ASSEM.	8
9	5H1012	GASKET-------(.125" Thick)	8
10	5H9792	GASKET-------(.163" Thick)	8
11	4B4280	WASHER	6
12	7L6614	SHELL	2
13	7L8212	PLUG	2
C 14	6L7816	RING	8
15	1B4330	NUT	2
	3B4504	LOCKWASHER	2
	4B4276	WASHER	2

REAR VIEW OF PANEL BRACKET

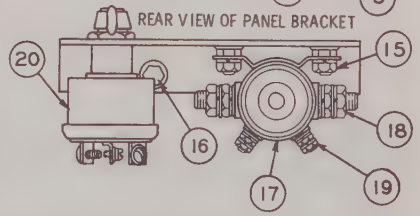

17	9F3099	SWITCH--------(Magnetic)	1
18	4F2294	NUT	2
	8F908	WASHER	2
	4M62	LOCKWASHER	2
19	4B2043	NUT	2
	3B4501	LOCKWASHER	2
		(Parts of 9F3099 Switch)	
20	2S2342	SWITCH ASSEM.	1
21	8F3437	LEVER	1
	5L7200	SCREW	1
	3B4501	LOCKWASHER	1
		(Parts of 2S2342 Switch Assem.)	

126614

5L7305 STARTING AID GLOW PLUG GROUP—32 Volt—Type 3

5L7305 STARTING AID GLOW PLUG GROUP—32 Volt

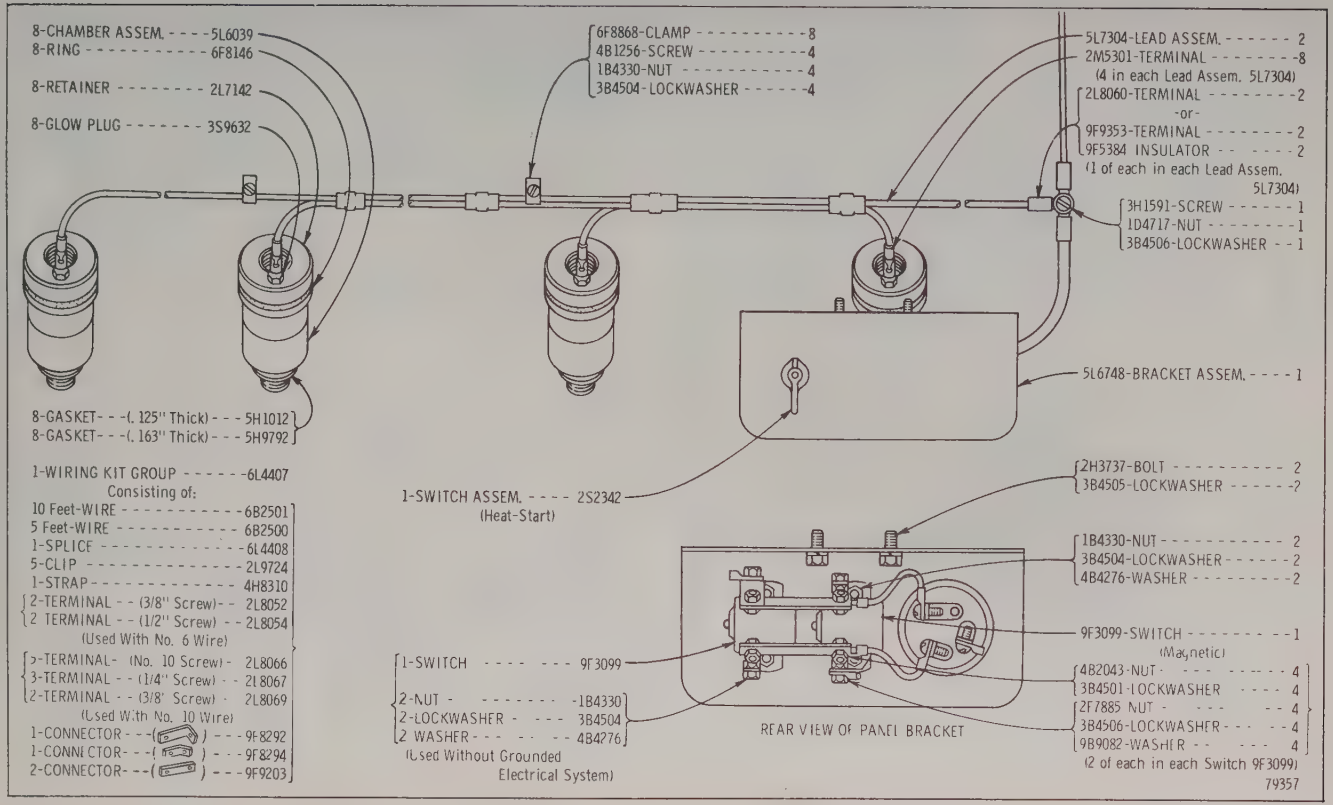

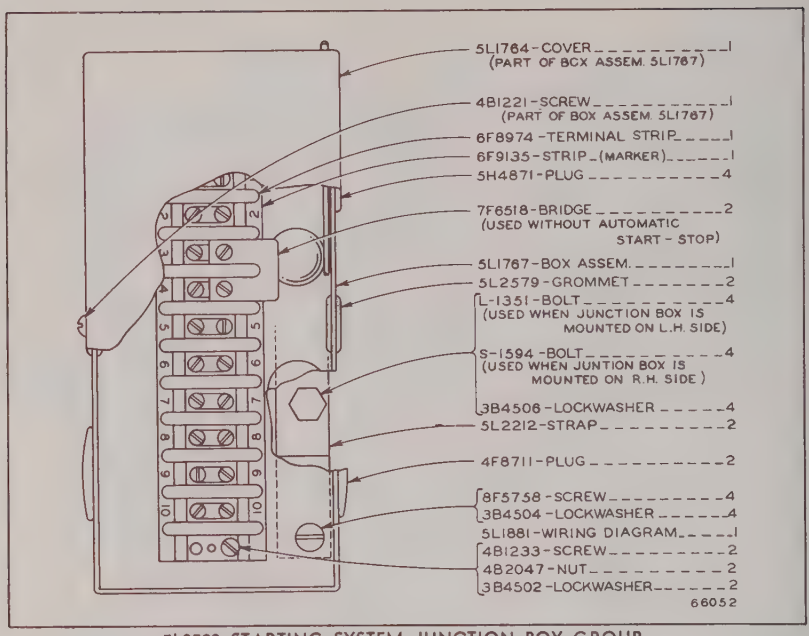

5L2592 STARTING SYSTEM JUNCTION BOX GROUP

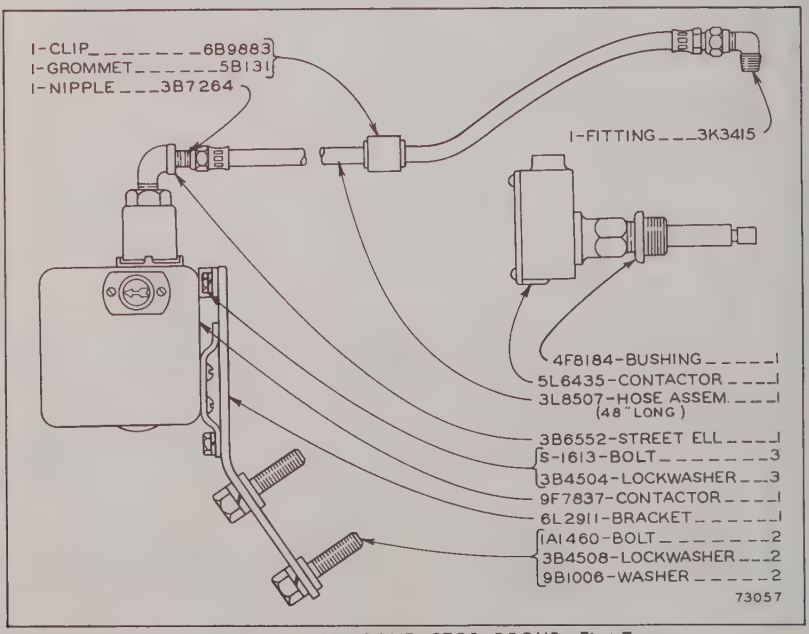

6LI631 SAFETY ALARM CONTACTOR GROUP—First Type

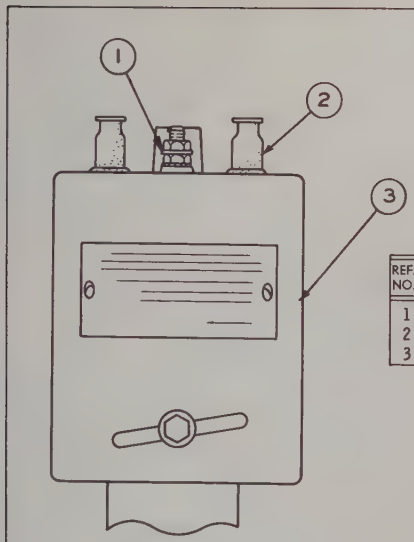

REF. NO.	PART NUMBER	DESCRIPTION	QTY.
1	5M1822	WASHER	3
2	7L7516	BOOT	2
3	7L7349	CONTACTOR-----(Overspeed)-----	1

7L7366 OVERSPEED SAFETY CONTACTOR GROUP

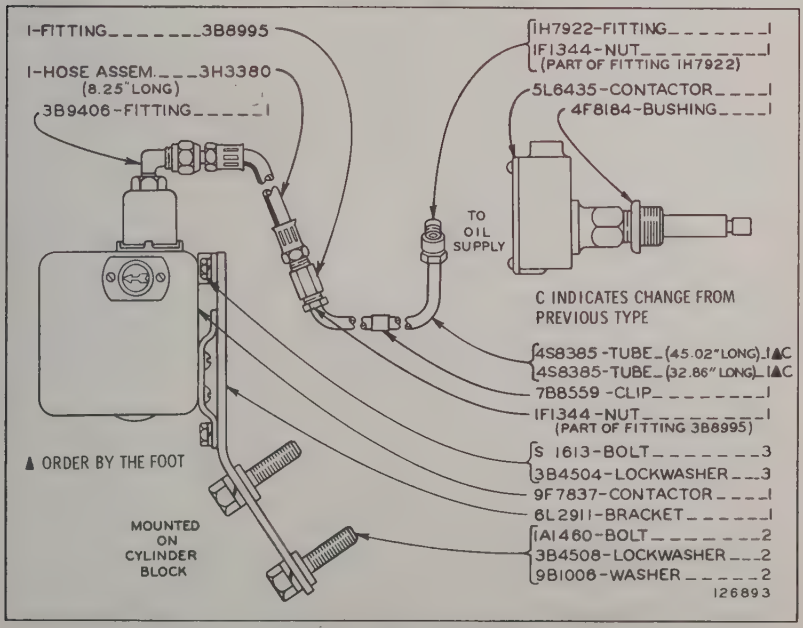

6L1631 SAFETY ALARM CONTACTOR GROUP—Type 3

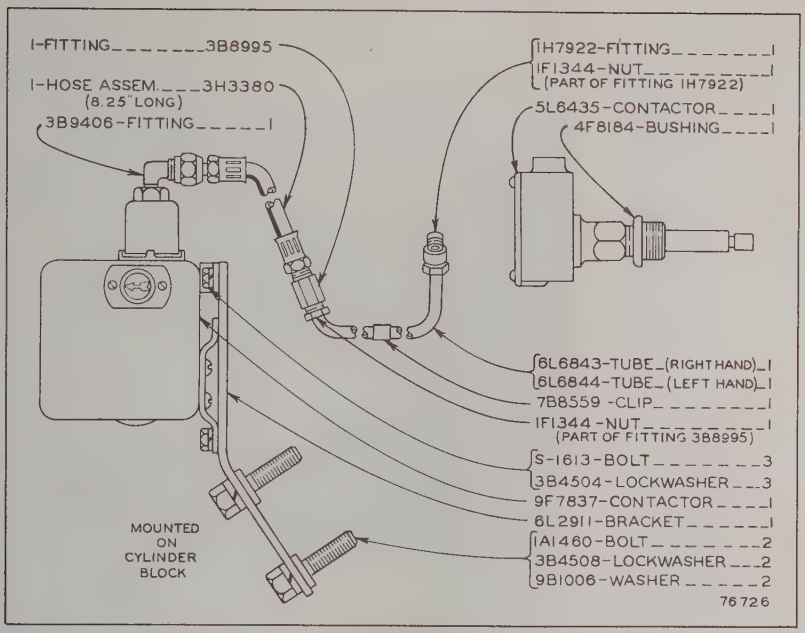

6L1631 SAFETY ALARM CONTACTOR GROUP—Second Type

		Consists of:	Page
1	6L9457	Hardware and Drive Group	118
1	2L3333	Hydraulic Gauge	
1	2L3337	Filter—High Pressure	
1	2L8342	Hydraulic Hand Pump	
4	2L8343	Accumulator	
3	6L2852	Reservoir Mounting Strap	
1	6L4241	Reservoir Assembly	
1	6L4264	Diagram	
1	6L4692	Hydraulic Cranking Motor	
1	6L4694	Manual Quick Acting Hydraulic Valve	
1	6L8720	Recharging Pump Assembly	
8	3L4238	Accumulator Bracket Assembly	

Each Consisting of:

2	4B4277	Washer
2	5B5620	Bolt
2	2L5683	Clamp—Accumulator
1	2L5684	Support—Accumulator Clamp
2	4M5280	Nut

HYDRAULIC STARTING SYSTEM
CANNOT BE USED WITH CHARGING GENERATORS OR ALTERNATORS

Consists of:

1	1B8707	Key—Drive Pulley
2	2B941	Spacer—Guard Assembly to Bracket Assembly
2	3B1915	Bolt—Guard Assembly to Accessory Drive Housing
2	3B4505	Lockwasher—5/16"
5	3B4506	Lockwasher—3/8"
4	3B4508	Lockwasher—1/2"
5	3B4510	Lockwasher—5/8"
1	3B4622	Cotter Pin—Drive Pulley Accessory Shaft
1	3B5412	Nut—Drive Pulley
2	4B3388	Bolt—Pump to Bracket Assembly
4	4B4277	Washer—Bolt
10	4B4278	Washer—Bolt
4	4B4280	Washer—U-Bolt
4	4B4281	Washer
1	5B7852	Cover—Flywheel Housing
2	5B8978	Tee—Reservoir Assembly
2	8B2664	Bushing—Valve Reducer
6	8B2664	Bushing—Accumulator
1	8B7179	Set Screw—Pulley to Pump Shaft
2	1D4716	Nut—Bolt
1	1D4717	Nut—Bolt
4	1D4719	Nut—U-Bolt
2	1D4720	Nut—Bolt
5	2D58	Union—Straight—Hose Coupling
2	2D3134	U-Bolt—Valve
1	2D8910	Union—90°
1	3D8884	Elbow—90°—High Pressure to Gauge
8	4D3763	Coupling
3	6F253	Lockwasher—Bolt
2	2H3940	Union—90°
2	2H9091	Union—Straight—Motor Outlet
16	4H2243	Coupling—High Pressure Hose
1	3L6309	Vee Belt—Pump Drive
3	4L863	Fitting—Adapter-Union—Accumulator
2	4L7412	Adapter—Recharging Pump
1	5L1156	Pulley—Pump Drive
1	5L1413	Pulley—R.H.—Upper-Front Accessory Drive
1	5L3940	Guard Assembly—Pump Drive
2	5L5502	Service Tee—High Pressure Lines
3	6L4697	Screw—Starting Motor
1	6L7345	Bracket Assembly—Pump Mounting
1	6L9456	Bracket Assembly—Pump Mounting
1	7M4495	Hydraulic Hose—25 Foot
1	8M7084	Hydraulic Hose—20 Foot
2	S-1566	Bolt
1	S-1571	Bolt—Guard Assembly to Bracket Assembly
3	S-1592	Bolt—Cover to Housing
2	S-1594	Bolt—Bracket to Accessory Drive Housing
1	179A	Washer—Drive Pulley

6L9457 HARDWARE AND DRIVE GROUP

Part of Hydraulic Starting Systems listed on Page 117

5L1978 GENERATOR GROUP--12 VOLT, 35 AMPERE
5L5750 GENERATOR ASSEMBLY PARTS ARE SHOWN ON PAGE 121

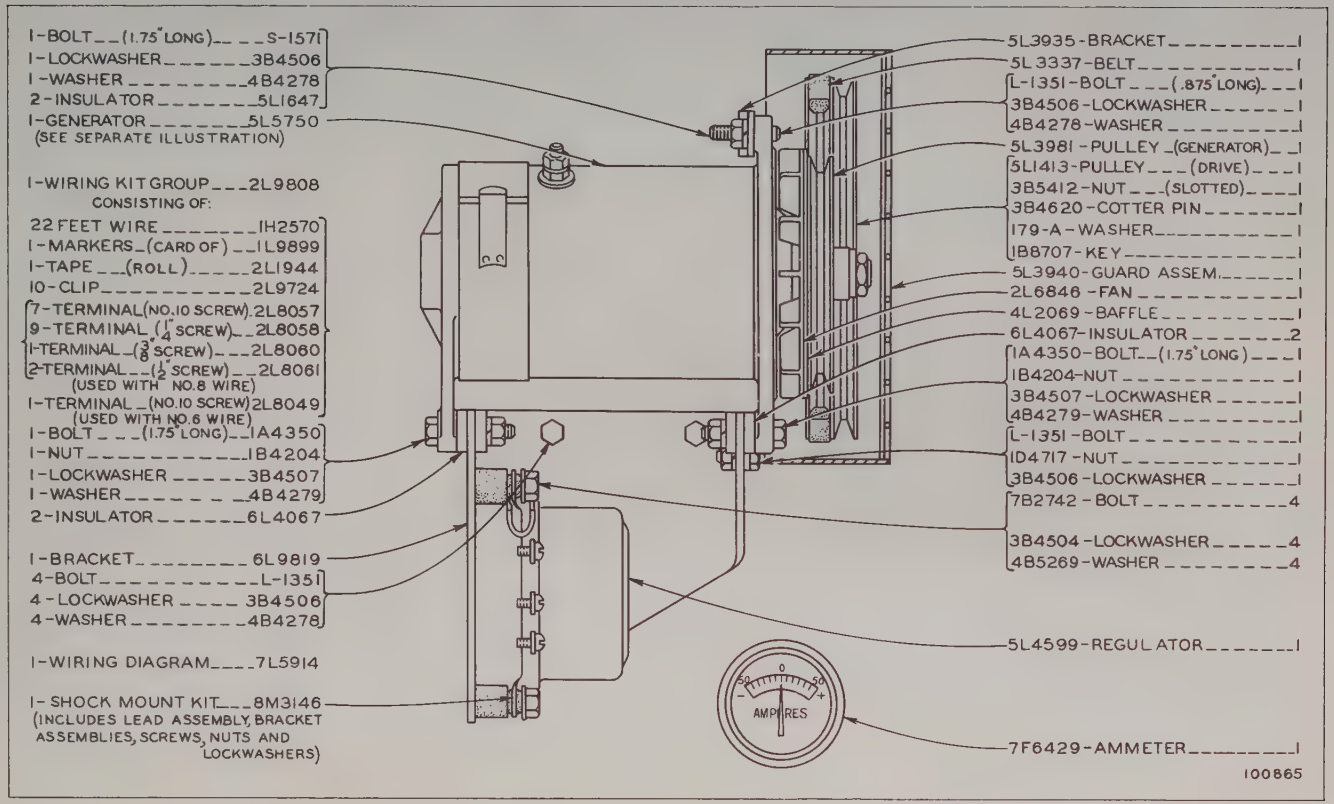

5L1978 GENERATOR ASSEMBLY—12 Volt, 35 Ampere—Type 2

5L5750 Generator parts are shown on Page 121

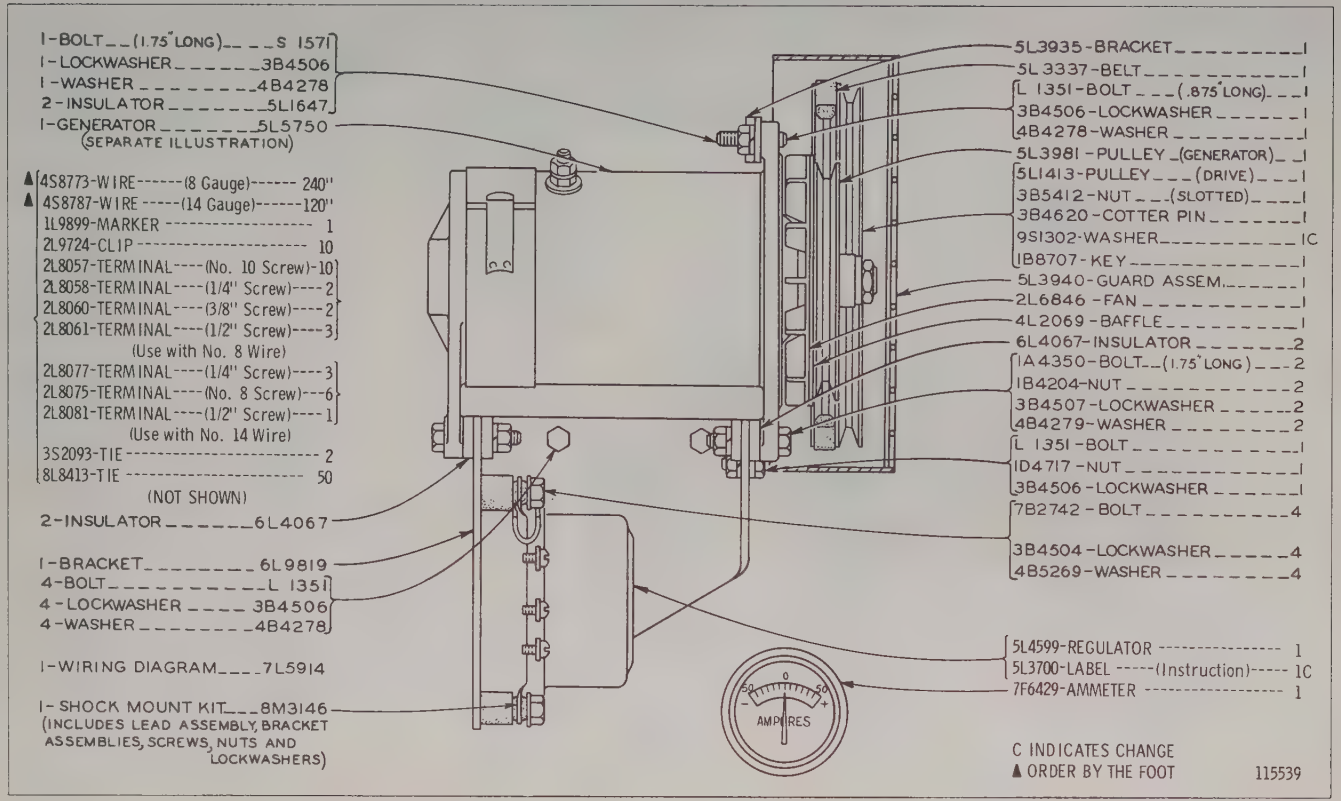

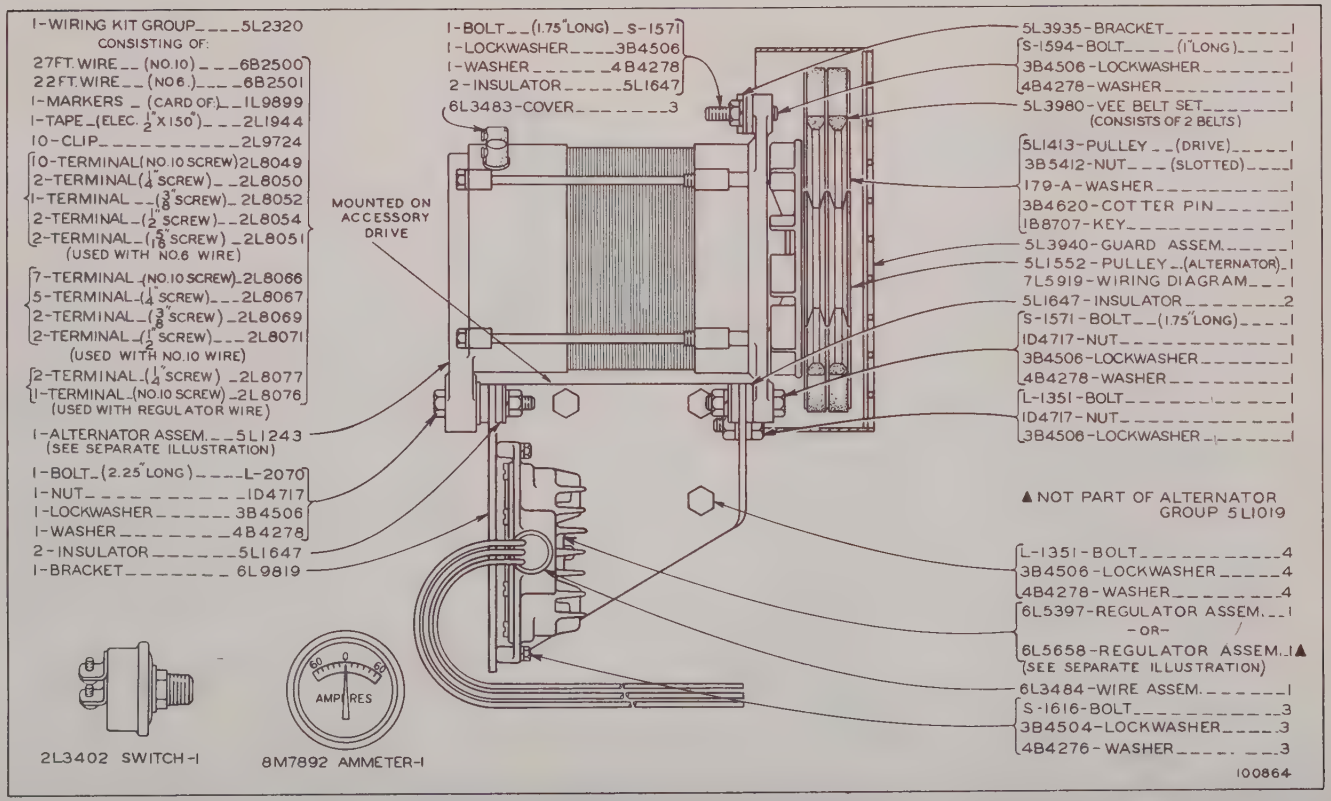

5L1019 ALTERNATOR GROUP—32 Volt, 60 Ampere

5L1243 Alternator Assembly, 6L5397 and 6L5658 Regulator Assembly parts are shown on Pages 122 and 123

For 30 Volt application substitute 6L5658 for 6L5397

5L5750 GENERATOR ASSEMBLY—12 Volt, 35 Ampere

Part of 5L1978 Generator Group shown on Page 119

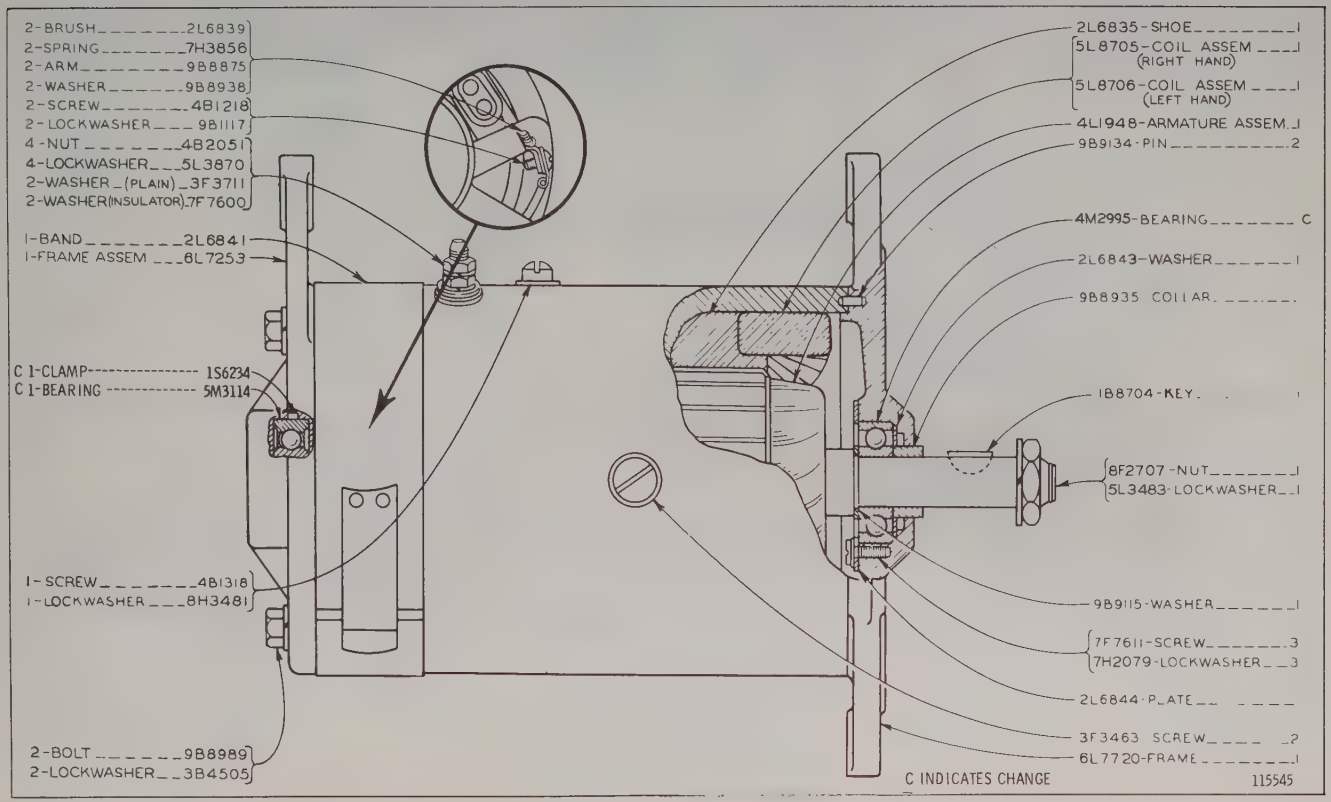

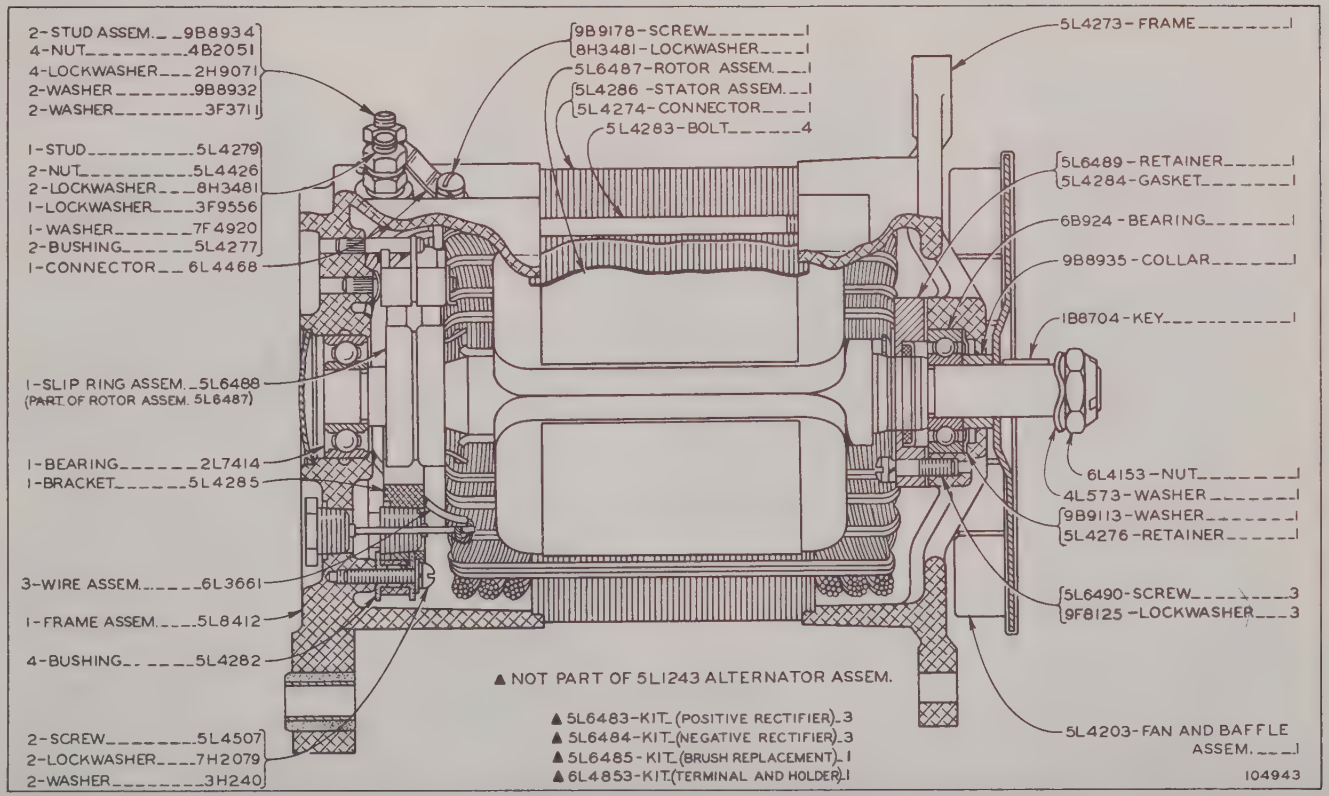

5L1243 ALTERNATOR ASSEMBLY—32 Volt, 60 Ampere
Part of 5L1019 Alternator Group shown on Page 120

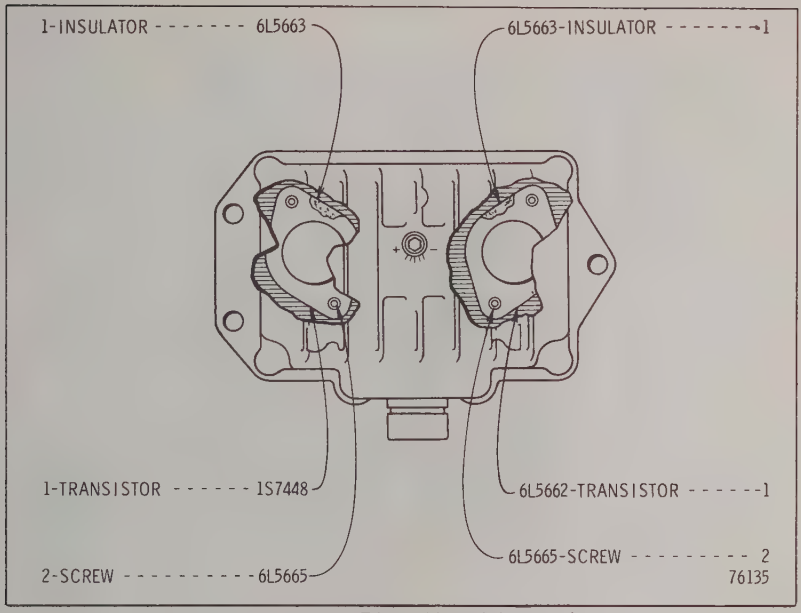

6L5397 REGULATOR ASSEMBLY—32 Volt
Part of 5L1019 Alternator Group shown on Page 120
6L5658 REGULATOR ASSEMBLY—30 Volt
FOR USE WITH 5L1019 ALTERNATOR GROUP SHOWN ON PAGE 120

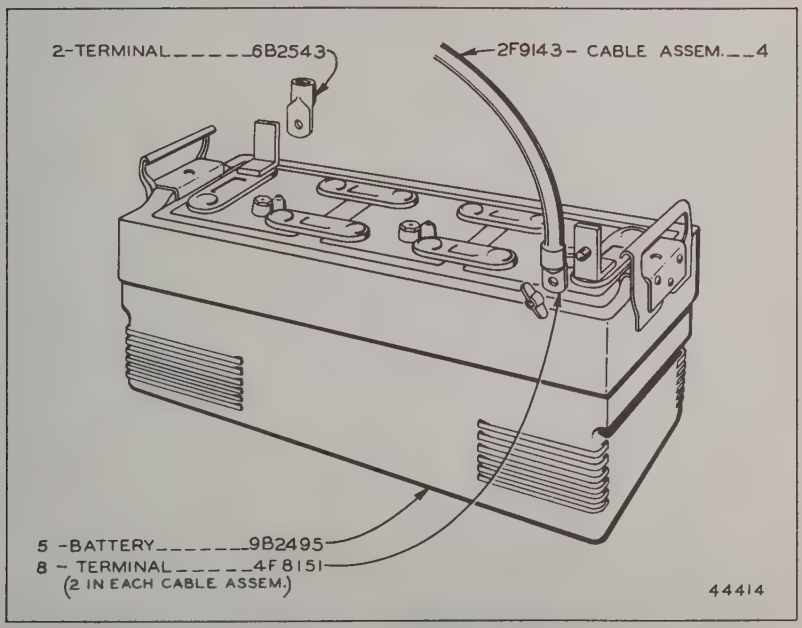

5F5276 BATTERY GROUP—30 Volt, 315 Ampere Hours

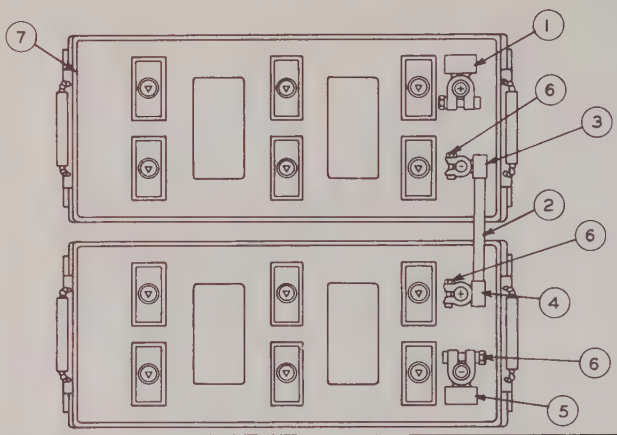

REF NO	PART NUMBER	DESCRIPTION	QTY
1	5M9204	TERMINAL ASSEM. ------(+)------	1
2	1L5686	CABLE ASSEM. ----------	1
3	5M9205	TERMINAL ASSEM. -----(-)-----	1
4	5M9204	TERMINAL ASSEM. -----(+)-----	1
		(Parts of 1L5686 Cable Assem.)	

REF NO	PART NUMBER	DESCRIPTION	QTY
5	5M9205	TERMINAL ASSEM. ------(-)------	1
6	1M6119	BOLT ----------	4
	1M6120	NUT ----------	4
		(1 each in 5M9204 & 5M9205 Terminal Assem.)	
7	4S9261	BATTERY ----------	2

146165

7L7871 BATTERY GROUP—24 Volt, 172 Ampere Hours

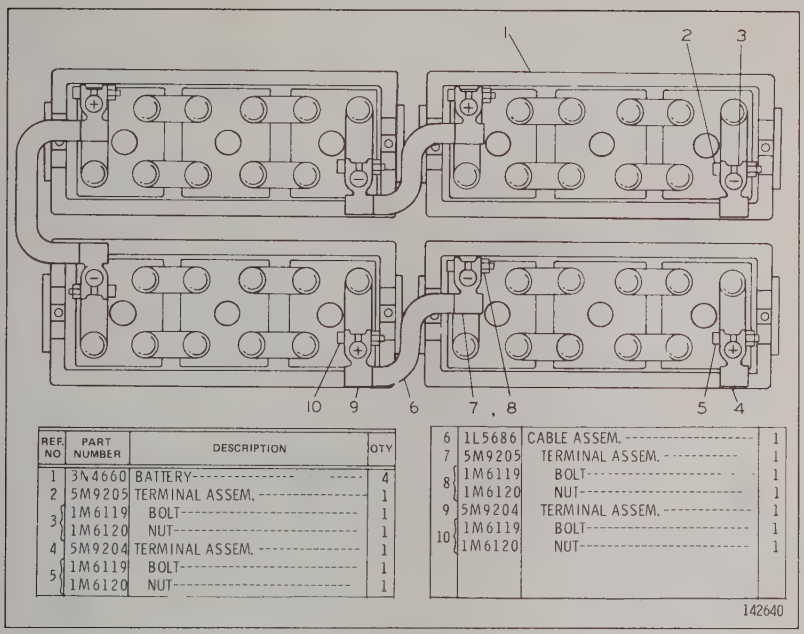

REF. NO	PART NUMBER	DESCRIPTION	QTY
1	3N4660	BATTERY	4
2	5M9205	TERMINAL ASSEM.	1
3	1M6119	BOLT	1
	1M6120	NUT	1
4	5M9204	TERMINAL ASSEM.	1
5	1M6119	BOLT	1
	1M6120	NUT	1
6	1L5686	CABLE ASSEM.	1
7	5M9205	TERMINAL ASSEM.	1
8	1M6119	BOLT	1
	1M6120	NUT	1
9	5M9204	TERMINAL ASSEM.	1
10	1M6119	BOLT	1
	1M6120	NUT	1

142640

3N4653 BATTERY GROUP—24 Volt, 300 Ampere Hours

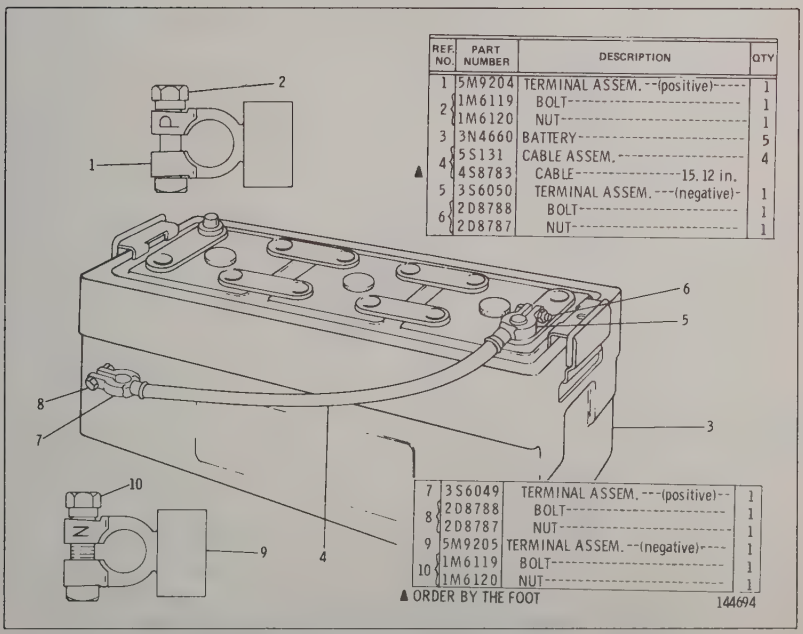

REF. NO.	PART NUMBER	DESCRIPTION	QTY
1	5M9204	TERMINAL ASSEM. --(positive)--	1
2	1M6119	BOLT	1
	1M6120	NUT	1
3	3N4660	BATTERY	5
4	5S131	CABLE ASSEM.	4
	4S8783	CABLE---15.12 in.	
5	3S6050	TERMINAL ASSEM. ---(negative)-	1
6	2D8788	BOLT	1
	2D8787	NUT	1
7	3S6049	TERMINAL ASSEM. ---(positive)--	1
8	2D8788	BOLT	1
	2D8787	NUT	1
9	5M9205	TERMINAL ASSEM. --(negative)----	1
10	1M6119	BOLT	1
	1M6120	NUT	1

▲ ORDER BY THE FOOT

144694

5F5276 BATTERY GROUP—30 Volt—315 Ampere Hours—Type 2

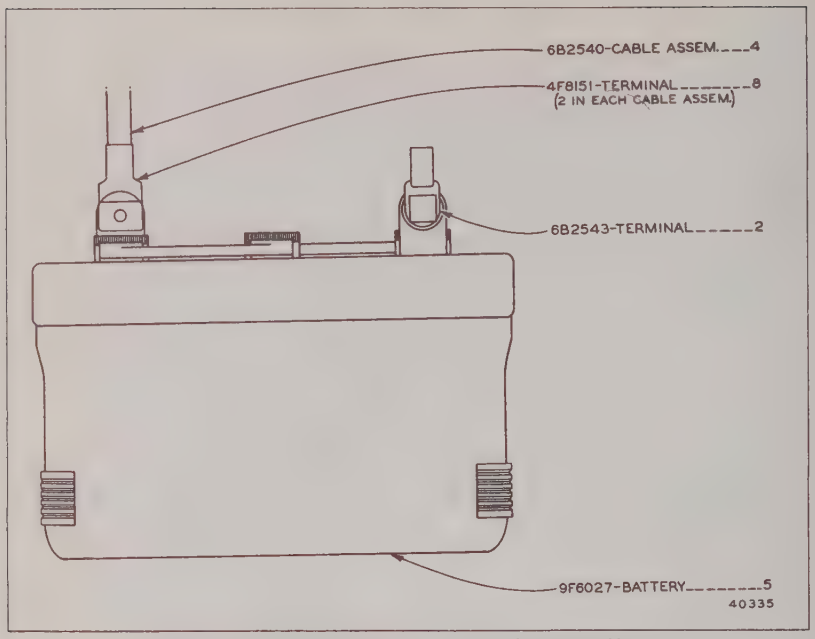

1L5663 BATTERY GROUP—30 Volt, 170 Ampere Hours
FOR USE BETWEEN 10° AND 30°FAHRENHEIT TEMPERATURES
Only separate parts serviced. When complete
Group is required order 2N1943

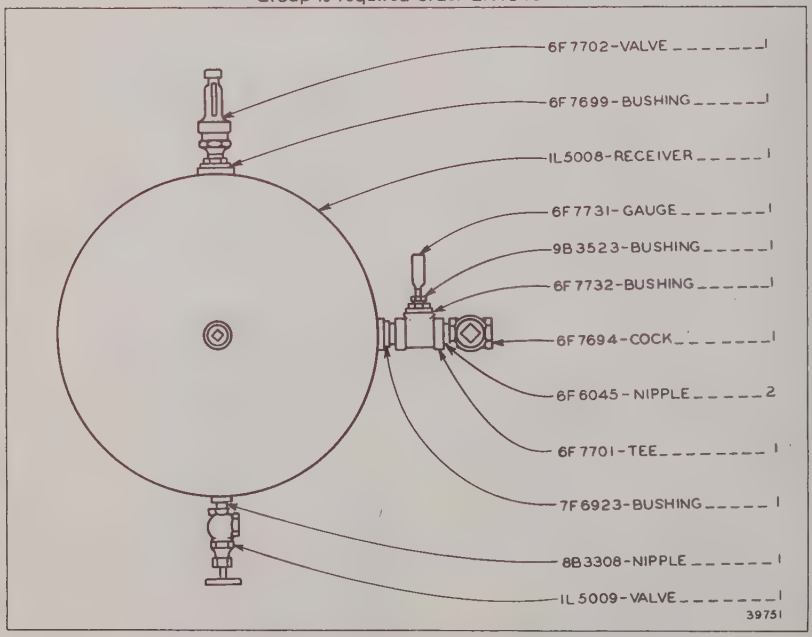

1L5010 AIR RECEIVER GROUP—10.5 Cubic Yard Capacity
FOR USE WITH AIR STARTING

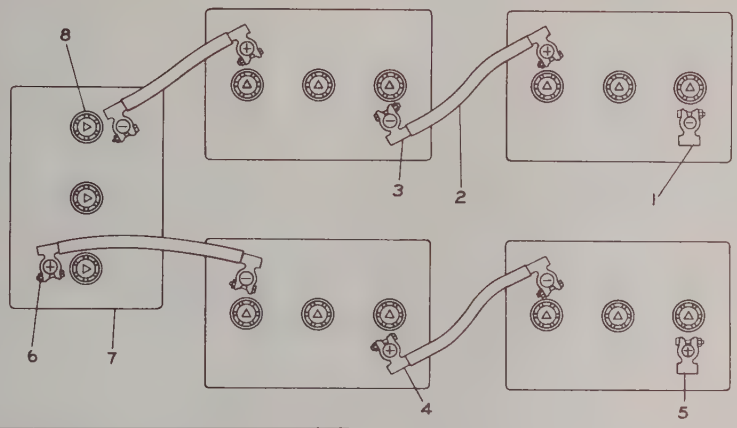

REF. NO.	PART NUMBER	DESCRIPTION	QTY
1	5M9205	TERMINAL ASSEM. ------(-)------	1
2	1L5686	CABLE ASSEM. ----------	4
3	5M9205	TERMINAL ASSEM. -----(-)------	1
4	5M9204	TERMINAL ASSEM. ------(+)-----	1
		(Parts of 1L5686 Assem.)	

5	5M9204	TERMINAL ASSEM. -------(+)-----	1
6	1M6119	BOLT----------	1
	1M6120	NUT----------	1
		(Parts of 5M9205 & 5M9204 Assem.)	
7	8S9336	BATTERY ASSEM. ----------	5
8	7S5041	PLUG----------	3
		(Part of 8S9336 Assem.)	

146171

2N1943 BATTERY GROUP—30 Volt, 172 Ampere Hours
FOR USE BETWEEN 10 DEGREES AND 30 DEGREES FAHRENHEIT TEMPERATURES

6L2801 AIR STARTING GROUP—R.H.—S.A.E. Standard Engine Rotation

3L9922 Whistle Valve, 1L2073 Regulating Valve, 5L1750 and 6L6731 Motor Assembly parts are shown on Pages 131 and 132

Only separate parts serviced. When complete Group is required order 6L8418 shown on Page 126

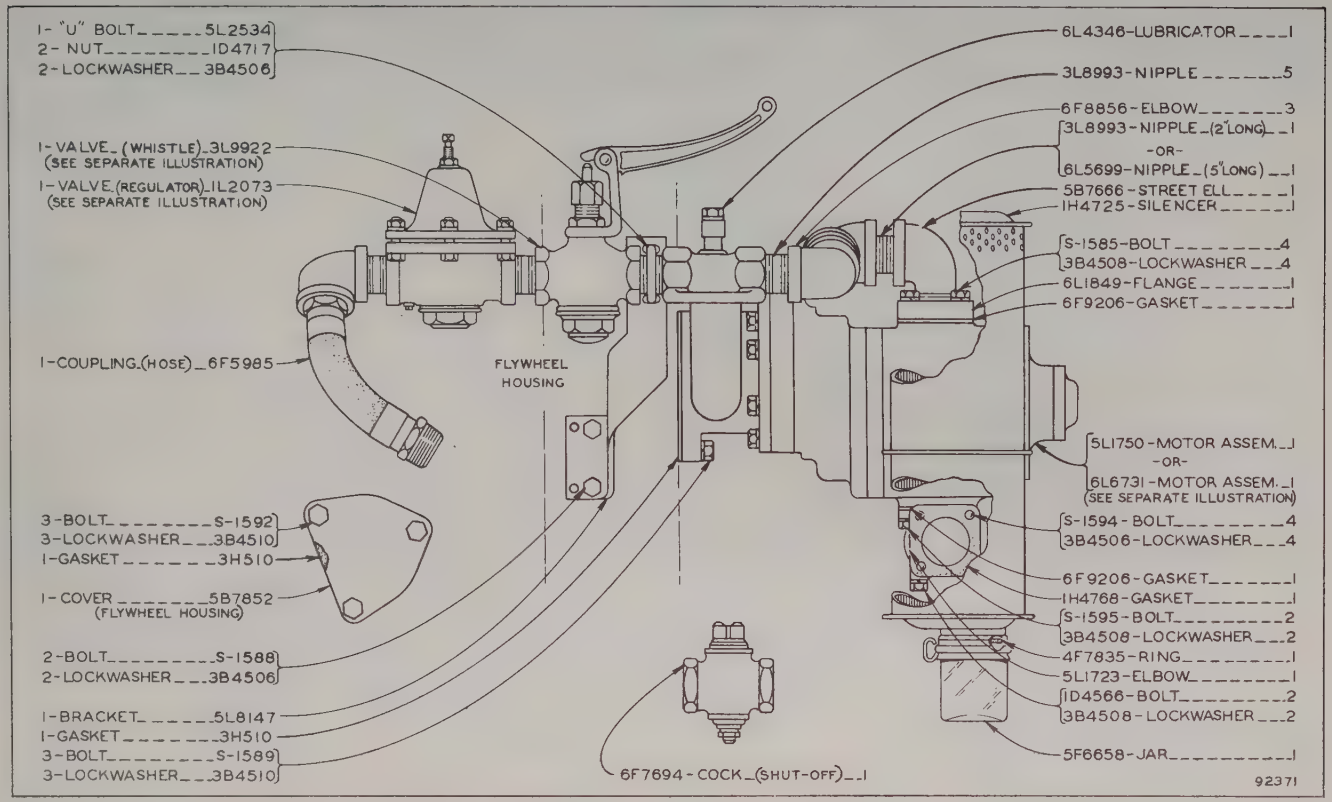

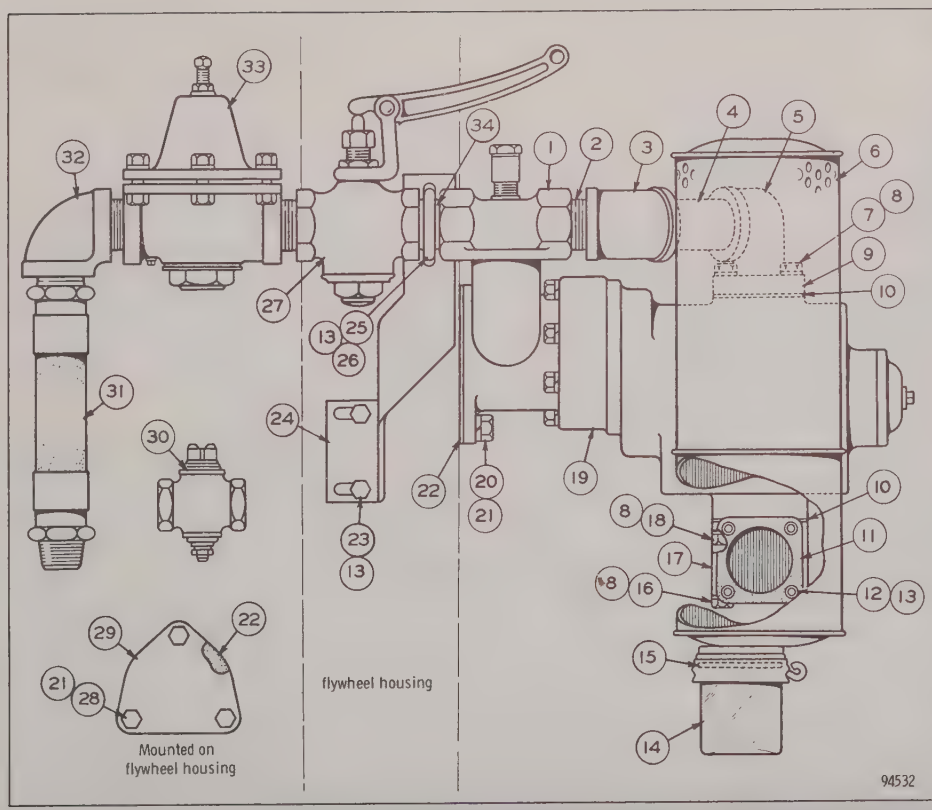

REF NO	PART NUMBER	DESCRIPTION	QTY
1	6L4346	LUBRICATOR	1
2	3L8993	NIPPLE	3
3	2L2813	ELBOW	1
4	6L5699	NIPPLE	1
5	5B7666	STREET ELL	1
6	1H4725	SILENCER	1
7	S-1585	BOLT	4
8	3B4508	LOCKWASHER	8
9	6L1849	FLANGE	1
10	6F9206	GASKET	2
11	1H4768	GASKET	1
12	S-1594	BOLT	4
13	3B4506	LOCKWASHER	8
14	5F6658	JAR	1
15	4F7835	RING	1
16	1D4566	BOLT	2
17	5L1723	ELBOW	1
18	S-1595	BOLT	2
19	6L6731	MOTOR ASSEM. (See Separate Illustration)	1
20	S-1589	BOLT	3
21	3B4510	LOCKWASHER	6
22	3H510	GASKET	2
23	S-1588	BOLT	2
24	6L8487	BRACKET	1
25	5L2534	"U" BOLT	1
26	1D4717	NUT	2
27	3L9922	VALVE---(Whistle)--- (See Separate Illustration)	1
28	S-1592	BOLT	3
29	5B7852	COVER	1
30	6F7694	COCK	1
31	6F5985	COUPLING (12" Long Includes Fitting-6F8856 Elbow to Auxiliary Compressor)	1
32	6F8856	ELBOW	1
33	1L2073	VALVE---(Regulator)--- (See Separate Illustration)	1
34	3L8992	NIPPLE	1

6L8418 AIR STARTING GROUP—R.H.—S.A.E. Standard Engine Rotation

3L9922 Whistle Valve, 1L2073 Regulating Valve and 6L6731 Motor Assembly parts are shown on Pages 131 and 132

6L2803 AIR STARTING GROUP—R.H.—S.A.E. Opposite Standard Engine Rotation

3L9922 Whistle Valve, 1L2073 Regulating Valve, 5L1749 and 6L6730 Motor Assembly parts are shown on Pages 131 and 132

Only separate parts service. When complete Group is required order 6L8417 shown on Page 128

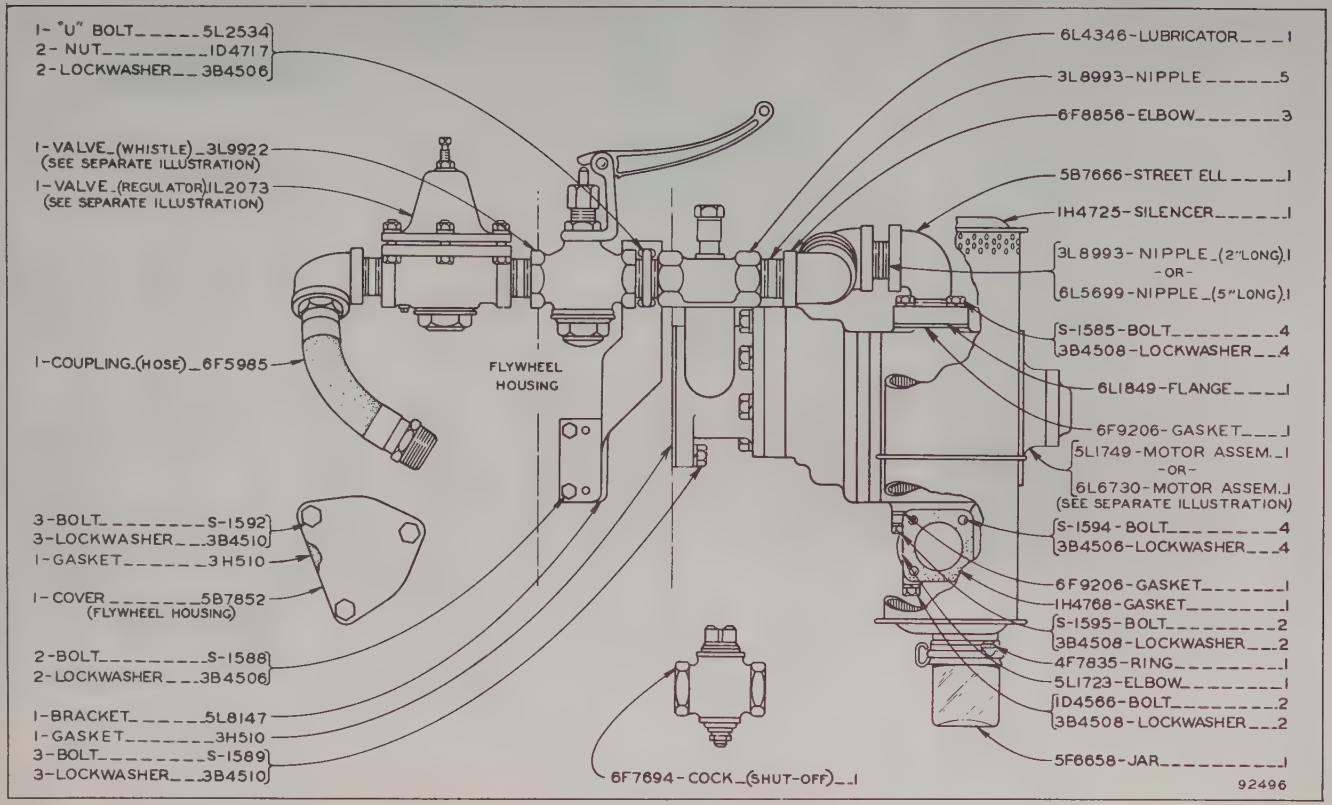

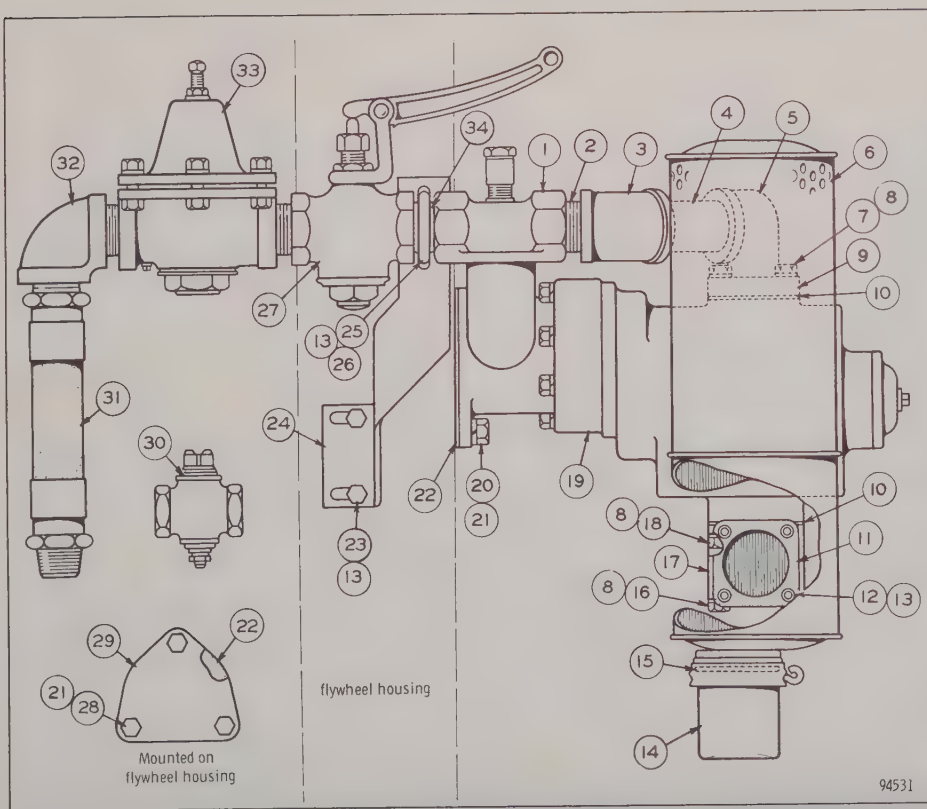

REF NO	PART NUMBER	DESCRIPTION	QTY
1	6L4346	LUBRICATOR	1
2	3L8993	NIPPLE	3
3	2L2813	ELBOW	1
4	6L5699	NIPPLE	1
5	5B7666	STREET ELL	1
6	1H4725	SILENCER	1
7	S-1585	BOLT	4
8	3B4508	LOCKWASHER	8
9	6L1849	FLANGE	1
10	6F9206	GASKET	2
11	1H4768	GASKET	1
12	S-1594	BOLT	4
13	3B4506	LOCKWASHER	8
14	5F6658	JAR	1
15	4F7835	RING	1
16	1D4566	BOLT	2
17	5L1723	ELBOW	1
18	S-1595	BOLT	2
19	6L6730	MOTOR ASSEM. (See Separate Illustration)	1
20	S-1589	BOLT	3
21	3B4510	LOCKWASHER	6
22	3H510	GASKET	2
23	S-1588	BOLT	2
24	6L8487	BRACKET	1
25	5L2534	"U" BOLT	1
26	1D4717	NUT	2
27	3L9922	VALVE-(Whistle) (See Separate Illustration)	1
28	S-1592	BOLT	3
29	5B7852	COVER	1
30	6F7694	COCK	1
31	6F5985	COUPLING (12" Long Includes Fitting-6F8856 Elbow to Auxiliary Compressor)	1
32	6F8856	ELBOW	1
33	1L2073	VALVE-(Regulator) (See Separate Illustration)	1
34	3L8992	NIPPLE	1

6L8417 AIR STARTING GROUP—R.H.—S.A.E. Opposite Standard Engine Rotation

3L9922 Whistle Valve, 1L2073 Regulating Valve and 6L6730 Motor Assembly parts are shown on Pages 131 and 132

6L2804 AIR STARTING GROUP—L.H.—S.A.E. Standard Engine Rotation

3L9922 Whistle Valve, 1L2073 Regulating Valve, 5L1750 and 6L6731 Motor Assembly parts are shown on Pages 131 and 132

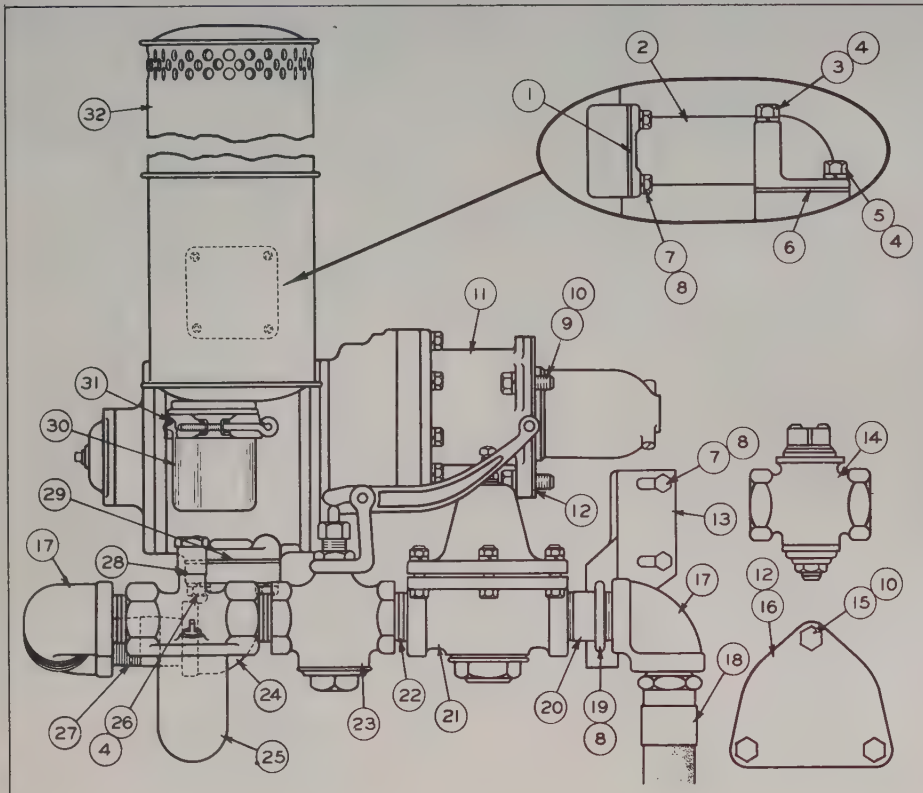

REF NO.	PART NUMBER	DESCRIPTION	QTY
1	1H4768	GASKET	1
2	5L1723	ELBOW	1
3	1D4566	BOLT—(3.50" Long)	2
4	3B4508	LOCKWASHER	8
5	S-1595	BOLT—(1.25" Long)	2
6	6F9206	GASKET	1
7	S-1594	BOLT	6
8	3B4506	LOCKWASHER	8
9	S-1589	BOLT	3
10	3B4510	LOCKWASHER	6
11	5L1750	MOTOR ASSEM.	1
		—or—	
	6L6731	MOTOR ASSEM. (See Separate Illustration)	1
12	3H510	GASKET	2
13	5L1722	BRACKET	1
14	6F7694	COCK—(Shut-off)	1
15	S-1592	BOLT	3
16	5B7852	COVER—(Flywheel Housing)	1
17	6F8856	ELBOW	3
18	6F5985	COUPLING	1
19	5L2534	"U" BOLT	1
	1D4717	NUT	2
20	3L8993	NIPPLE	1
21	1L2073	VALVE—(Regulator) (See Separate Illustration)	1
22	6F8858	NIPPLE	4
23	3L9922	VALVE—(Whistle) (See Separate Illustration)	1
24	5B7666	STREET ELBOW	1
25	6L4347	LUBRICATOR	1
26	S-1587	BOLT	4
27	3L1258	NIPPLE	1
28	6L1849	FLANGE	1
29	6F9206	GASKET	1
30	5F6658	JAR	1
31	4F7835	RING	1
32	1H4725	SILENCER	1

94008

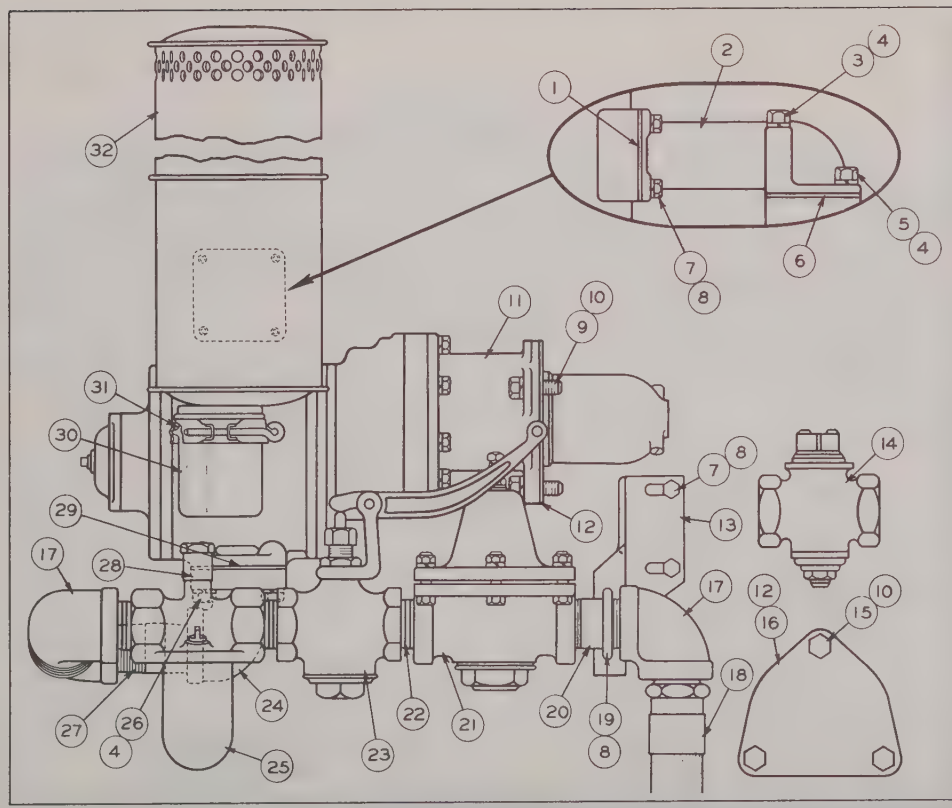

REF NO	PART NUMBER	DESCRIPTION	QTY
1	1H4768	GASKET	1
2	5L1723	ELBOW	1
3	1D4566	BOLT---------(3.50" Long)	2
4	3B4508	LOCKWASHER	8
5	S-1595	BOLT---------(1.25" Long)	2
6	6F9206	GASKET	1
7	S-1594	BOLT	6
8	3B4506	LOCKWASHER	8
9	S-1589	BOLT	3
10	3B4510	LOCKWASHER	6
11	5L1749	MOTOR ASSEM.	1
		or	
	6L6730	MOTOR ASSEM. (See Separate Illustration)	1
12	3H510	GASKET	2
13	5L1722	BRACKET	1
14	6F7694	COCK----------(Shut-off)	1
15	S-1592	BOLT	3
16	5B7852	COVER----(Flywheel Housing)	1
17	6F8856	ELBOW	3
18	6F5985	COUPLING	1
19	5L2534	"U" BOLT	1
	1D4717	NUT	2
20	3L8993	NIPPLE	1
21	1L2073	VALVE---------(Regulator) (See Separate Illustration)	1
22	6F8858	NIPPLE	4
23	3L9922	VALVE---------(Whistle) (See Separate Illustration)	1
24	5B7666	STREET ELBOW	1
25	6L4347	LUBRICATOR	1
26	S-1587	BOLT	4
27	3L1258	NIPPLE	1
28	6L1849	FLANGE	1
29	6F9206	GASKET	1
30	5F6658	JAR	1
31	4F7835	RING	1
32	1H4725	SILENCER	1

94002

6L2802 AIR STARTING GROUP—L.H.—S.A.E. Opposite Standard Engine Rotation

5L1749 and 6L6730 Motor Assembly parts are shown on Page 131 and 132

7L6913 AIR STARTING MOTOR GROUP—R.H.—S.A.E. Opposite Standard Engine Rotation
4N7556 Lubricator, 3L9922 Valve and 6L6730 Motor parts are shown on Pages 130F, 131 and 132

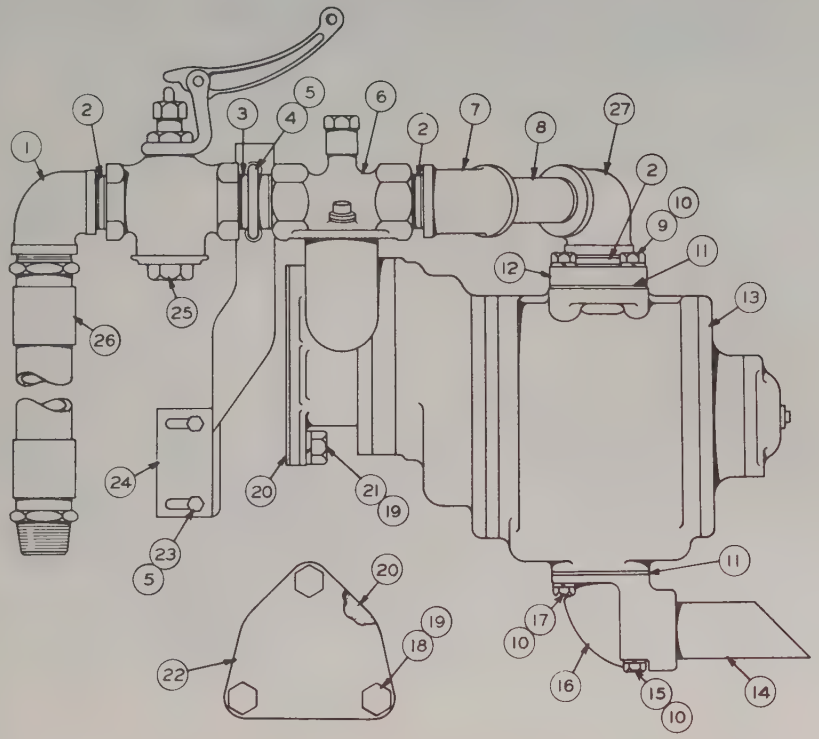

	REF. NO.	PART NUMBER	DESCRIPTION	QTY
	1	6B3685	ELBOW	1
	2	5B7661	NIPPLE	3
	3	1L2893	NIPPLE	1
	4	5L2534	U-BOLT	1
		1D4717	NUT	2
	5	3B4506	LOCKWASHER	4
C	6	4N7556	LUBRICATOR GROUP (Separate Illustration)	1
	7	2L2813	ELBOW	1
	8	4S5575	NIPPLE	1
	9	S1585	BOLT	4
	10	3B4508	LOCKWASHER	8
	11	6F9206	GASKET	2
	12	6L1849	FLANGE	1
	13	6L6730	MOTOR ASSEM. (Separate Illustration)	1
	14	6F9497	FITTING	1
	15	1B2886	BOLT-----9.53 cm(3.75 in.) long	2
	16	7F8023	ELBOW	1
	17	S1595	BOLT-----3.18 cm(1.25 in.) long	2
	18	S1592	BOLT	3
	19	3B4510	LOCKWASHER	6
	20	3H510	GASKET	2
	21	S1589	BOLT	3
	22	5B7852	COVER-----(flywheel housing)	1
	23	S1588	BOLT	2
	24	6L8487	BRACKET	1
	25	3L9922	VALVE--------(whistle) (Separate Illustration)	1
	26	6F5985	COUPLING	1
	27	5B7666	ELBOW	1

C INDICATES CHANGE 150092

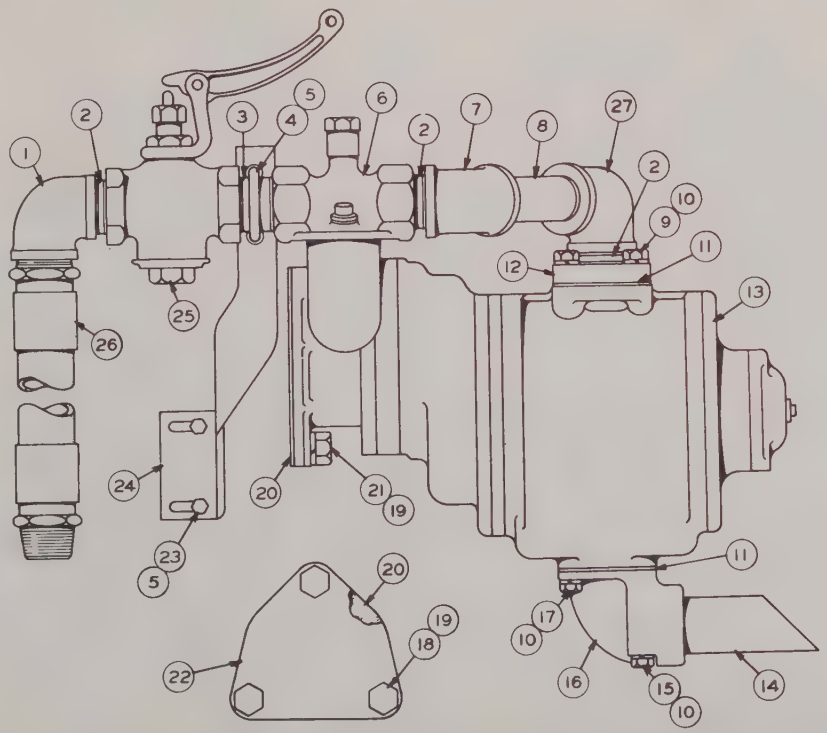

REF. NO.	PART NUMBER	DESCRIPTION	QTY
1	6B3685	ELBOW	1
2	5B7661	NIPPLE	3
3	1L2893	NIPPLE	1
4	5L2534	U-BOLT	1
	1D4717	NUT	2
5	3B4506	LOCKWASHER	4
C 6	4N7556	LUBRICATOR GROUP (Separate Illustration)	1
7	2L2813	ELBOW	1
8	4S5575	NIPPLE	1
9	S1585	BOLT	4
10	3B4508	LOCKWASHER	8
11	6F9206	GASKET	2
12	9L1849	FLANGE	1
13	6L6731	MOTOR ASSEM. (Separate Illustration)	1
14	6F9497	FITTING	1
15	1B2886	BOLT---9.53 cm(3.75 in.) long	2
16	7F8023	ELBOW	1
17	S1595	BOLT---3.18 cm(1.25 in.) long	2
18	S1592	BOLT	3
19	3B4510	LOCKWASHER	6
20	3H510	GASKET	2
21	S1589	BOLT	3
22	5B7852	COVER---(flywheel housing)	1
23	S1588	BOLT	2
24	6L8487	BRACKET	1
25	3L9922	VALVE---(whistle) (Separate Illustration)	1
26	6F5985	COUPLING	1
27	5B7666	ELBOW	1

C INDICATES CHANGE 150094

7L6914 AIR STARTING MOTOR GROUP—R.H.—S.A.E. Standard Engine Rotation
4N7556 Lubricator, 3L9922 Valve and 6L6731 Motor parts are shown on Pages 130F, 131 and 132

7L6915 AIR STARTING MOTOR GROUP—L.H.—S.A.E. Opposite Standard Engine Rotation
4N7556 Lubricator, 3L9922 Valve and 6L6730 Motor parts are shown on Pages 130F, 131 and 132

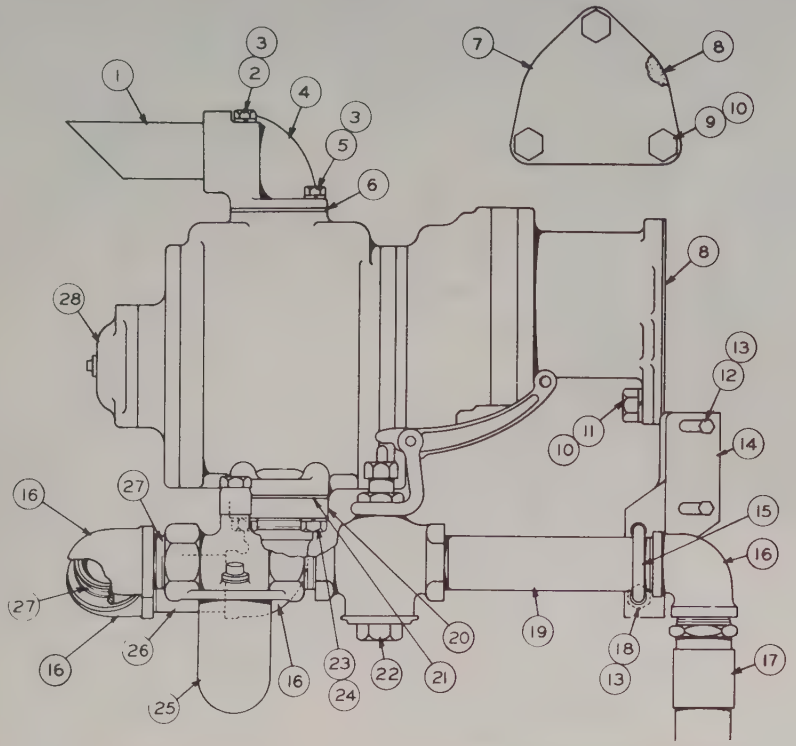

	REF NO	PART NUMBER	DESCRIPTION	QTY
	1	6F9497	FITTING	1
	2	1B2886	BOLT--------9.53 cm(3.75 in.)long	2
	3	3B4508	LOCKWASHER	4
	4	7F8023	ELBOW	1
	5	S 1595	BOLT--------3.18 cm(1.25 in.)long	2
	6	6F9206	GASKET	1
			(For use without Silencer and Vapor Arrestor)	
	7	5B7852	COVER-----(Flywheel Housing)----	1
	8	3H510	GASKET	2
	9	S 1592	BOLT	3
	10	3B4510	LOCKWASHER	6
	11	S 1589	BOLT	3
	12	S 1594	BOLT	2
	13	3B4506	LOCKWASHER	4
	14	5L1722	BRACKET	1
	15	5L2534	"U"-BOLT	1
	16	6B3685	ELBOW	4
	17	6F5985	COUPLING	1
	18	1D4717	NUT	2
C	19	3R9595	NIPPLE	1
			(For use without Regulator)	
	20	6L1849	FLANGE	1
	21	6F9206	GASKET	1
	22	3L9922	VALVE--------(Whistle)----------	1
			(See Separate Illustration)	
	23	S 1587	BOLT	4
	24	3B4508	LOCKWASHER	4
C	25	4N7556	LUBRICATOR GROUP	1
			(Separate Illustration)	
	26	6L7349	NIPPLE	1
	27	5B7661	NIPPLE	4
	28	6L6730	MOTOR ASSEM.	1
			(Separate Illustration)	

C INDICATES CHANGE 150095

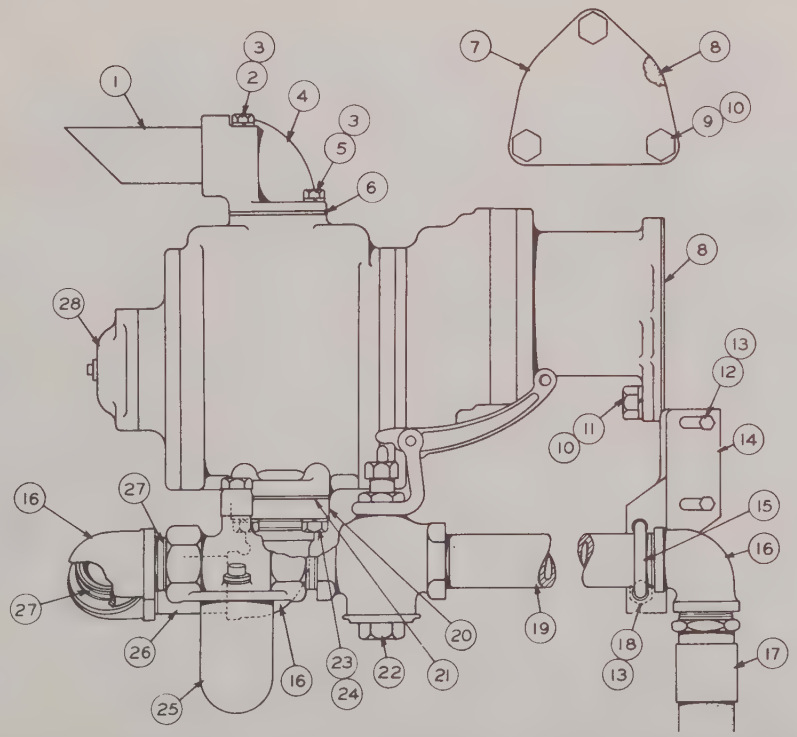

REF NO	PART NUMBER	DESCRIPTION	QTY
1	6F9497	FITTING	1
2	1B2886	BOLT------9.53 cm(3.75 in.) long	2
3	3B4508	LOCKWASHER	4
4	7F8023	ELBOW	1
5	S1595	BOLT------3.18 cm(1.25 in.) long	2
6	6F9206	GASKET	1
		(without Silencer and Vapor Arrestor)	
7	5B7852	COVER-----(Flywheel Housing)----	1
8	3H510	GASKET	2
9	S1592	BOLT	3
10	3B4510	LOCKWASHER	6
11	S1589	BOLT	3
12	S1594	BOLT	2
13	3B4506	LOCKWASHER	4
14	5L1722	BRACKET	1
15	5L2534	U-BOLT	1
16	6B3685	ELBOW	4
17	6F5985	COUPLING	1
18	1D4717	NUT	2
C 19	3R9595	NIPPLE	1
		(For use without Regulator)	
20	6L1849	FLANGE	1
21	6F9206	GASKET	1
22	3L9922	VALVE---------(whistle)--------	1
		(Separate Illustration)	
23	S1587	BOLT	4
24	3B4508	LOCKWASHER	4
C 25	4N7556	LUBRICATOR GROUP----------	1
		(Separate Illustration)	
26	6L7349	NIPPLE	1
27	5B7661	NIPPLE	4
28	6L6731	MOTOR ASSEM.	1
		(Separate Illustration)	

C INDICATES CHANGE 150096

7L6916 AIR STARTING MOTOR GROUP—L.H.—S.A.E. Standard Engine Rotation
4N7556 Lubricator, 3L9922 Valve and 6L6731 Motor parts are shown on Pages 130F, 131 and 132

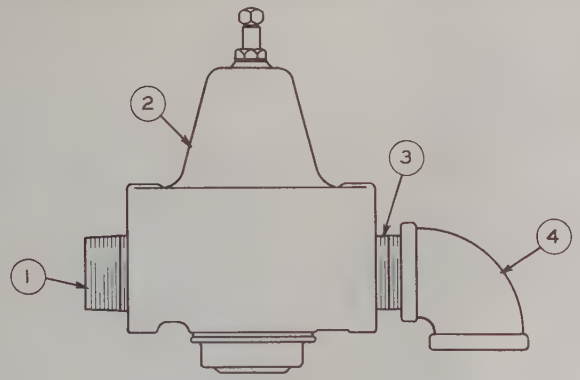

REF NO	PART NUMBER	DESCRIPTION	QTY
1	5B7661	NIPPLE	1
2	1L2073	VALVE (See Separate Illustration)	1
3	3L8993	NIPPLE (Used without R. H. Air Motor Groups)	1
4	6F8856	ELBOW	1

100994

7L6911 AIR STARTING VALVE GROUP
1L2073 Valve parts are shown on Page 131
FOR USE WITH AIR STARTING MOTORS

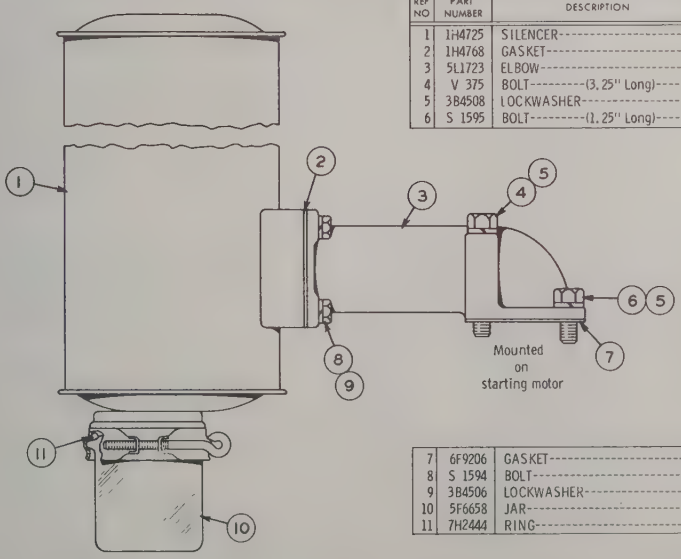

REF NO	PART NUMBER	DESCRIPTION	QTY
1	1H4725	SILENCER	1
2	1H4768	GASKET	1
3	5L1723	ELBOW	1
4	V 375	BOLT (3.25" Long)	2
5	3B4508	LOCKWASHER	4
6	S 1595	BOLT (1.25" Long)	2
7	6F9206	GASKET	1
8	S 1594	BOLT	4
9	3B4506	LOCKWASHER	4
10	5F6658	JAR	1
11	7H2444	RING	1

104941

7L6912 AIR SILENCER AND VAPOR ARRESTOR GROUP
FOR USE WITH AIR STARTING MOTORS

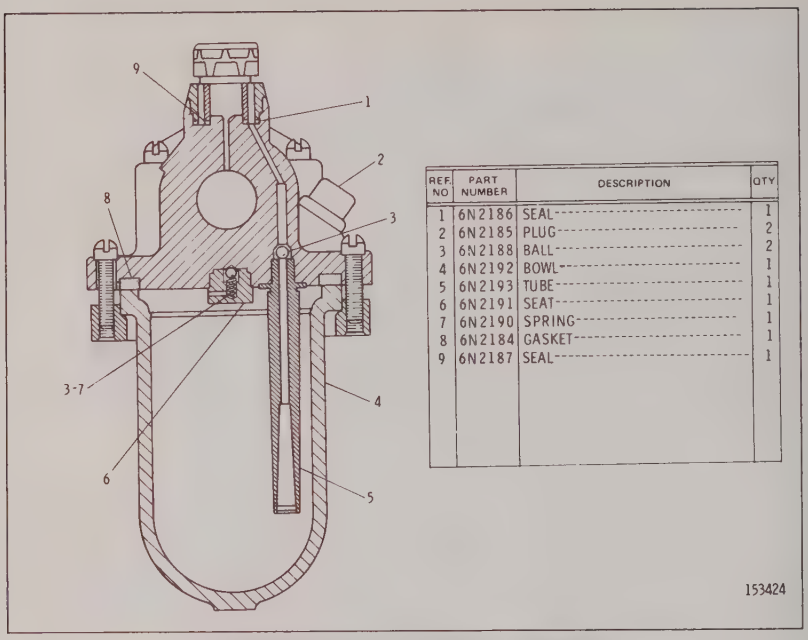

REF. NO	PART NUMBER	DESCRIPTION	QTY
1	6N2186	SEAL	1
2	6N2185	PLUG	2
3	6N2188	BALL	2
4	6N2192	BOWL	1
5	6N2193	TUBE	1
6	6N2191	SEAT	1
7	6N2190	SPRING	1
8	6N2184	GASKET	1
9	6N2187	SEAL	1

4N7556 AIR MOTOR LUBRICATOR GROUP
Part of 7L6913, 7L6914, 7L6915 and 7L6916 Air Starting Motor Groups shown on Pages 130A, 130B, 130C and 130D

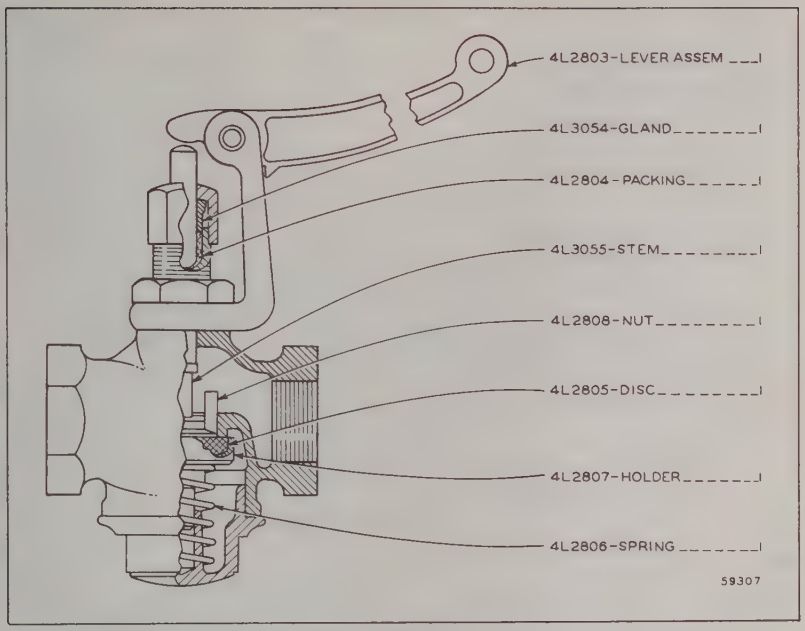

3L9922 WHISTLE VALVE
Part of 6L2801, 6L8418, 6L2803, 6L8417, 6L2804 and 6L2802 Air Starting Groups shown on Pages 125 through 130

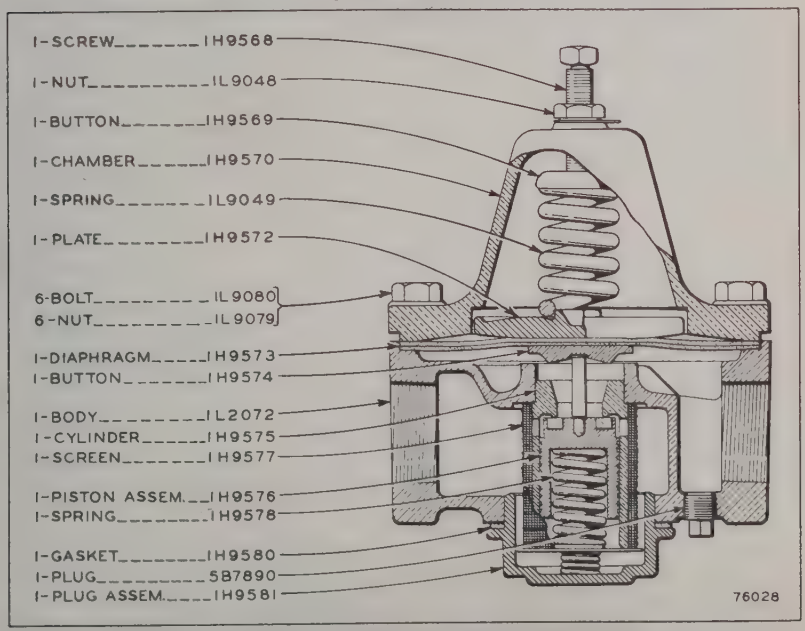

1L2073 PRESSURE REDUCING REGULATING VALVE
Part of 6L2801, 6L8418, 6L2803, 6L8417 6L2804 and 6L2802 Air Starting Groups shown on Pages 125 through 130

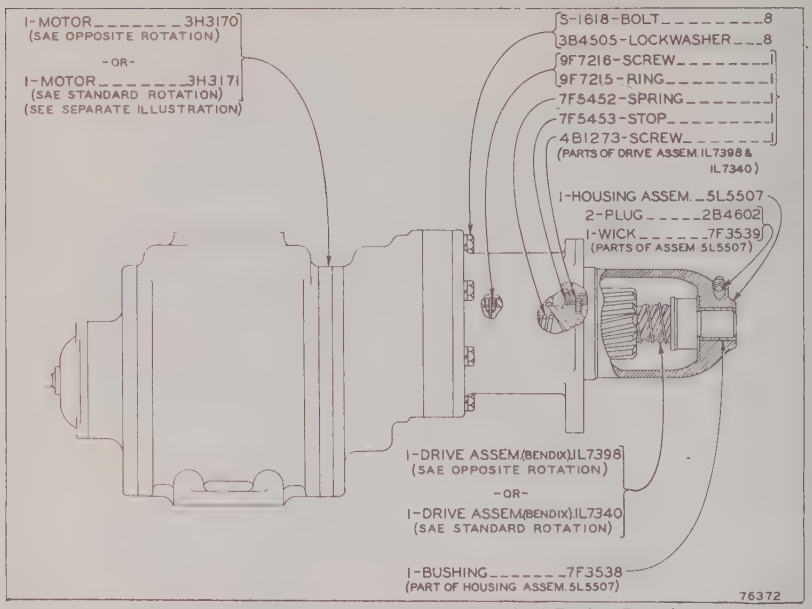

5L1750 MOTOR ASSEMBLY—S.A.E. Standard Engine Rotation
Part of 6L2801 & 6L2804 Air Starting Groups shown on Pages 125 & 129
5L1749 MOTOR ASSEMBLY—S.A.E. Opposite Standard Engine Rotation
Part of 6L2803 & 6L2802 Air Starting Groups shown on Pages 127 & 130
3H3171 & 3H3170 Air Motor parts are shown on Pages 133 & 134

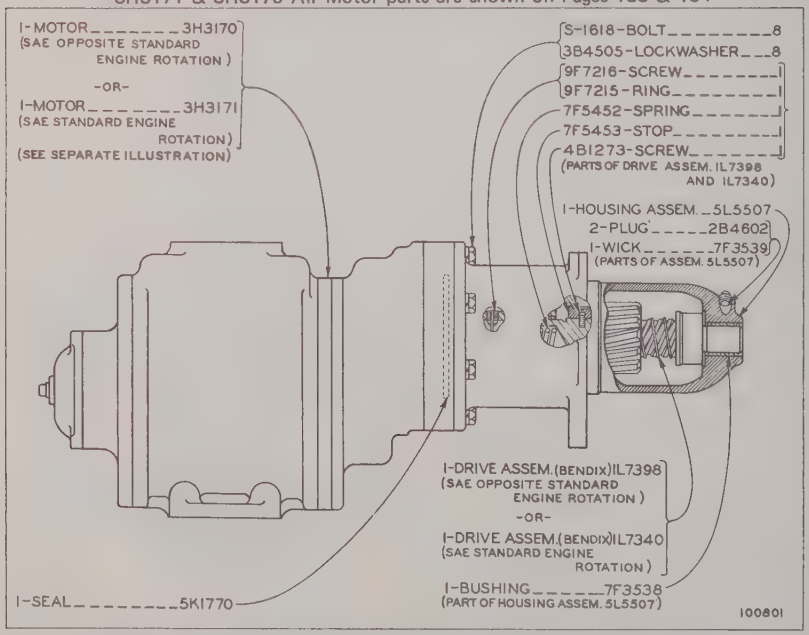

6L6731 MOTOR ASSEMBLY—S.A.E. Standard Engine Rotation—Type 1
Part of 6L2801, 6L8418 & 6L2804 Air Starting Groups shown on Pages 125, 126 & 129
6L6730 MOTOR ASSEMBLY—S.A.E. Opposite Standard Engine Rotation—Type 1
Part of 6L2803, 6L8417 & 6L2802 Air Starting Groups shown on Pages 127, 128 & 130
3H3171 & 3H3170 Air Motor parts are shown on Pages 133 & 134

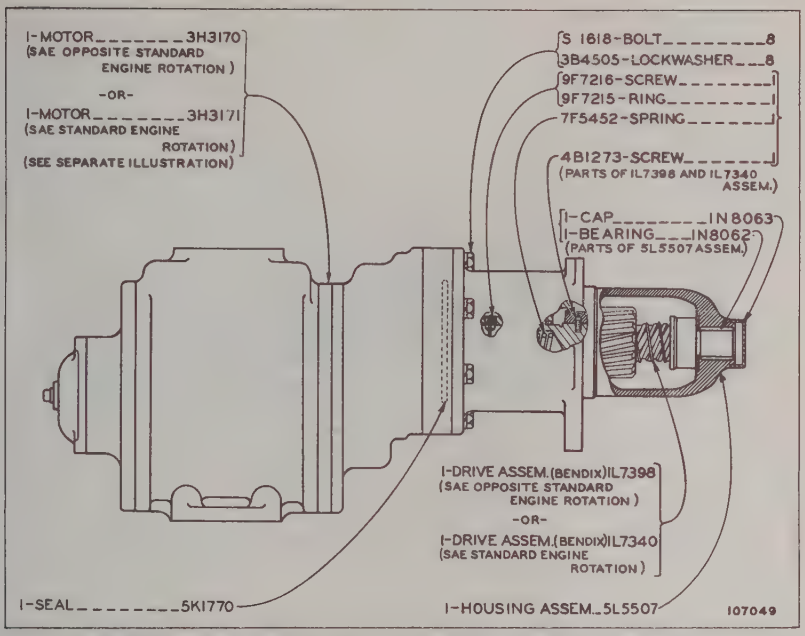

6L6731 MOTOR ASSEMBLY—S.A.E. Standard Engine Rotation—Type 2
Part of Air Starting Groups shown on Pages 125, 126, 129, 130B & 130D
6L6730 MOTOR ASSEMBLY—S.A.E. Opposite Standard Engine Rotation—Type 2
Part of Air Starting Groups shown on Pages 127, 128, 130, 130A & 130C
3H3171 & 3H3170 Air Motor parts are shown on Pages 133 & 134

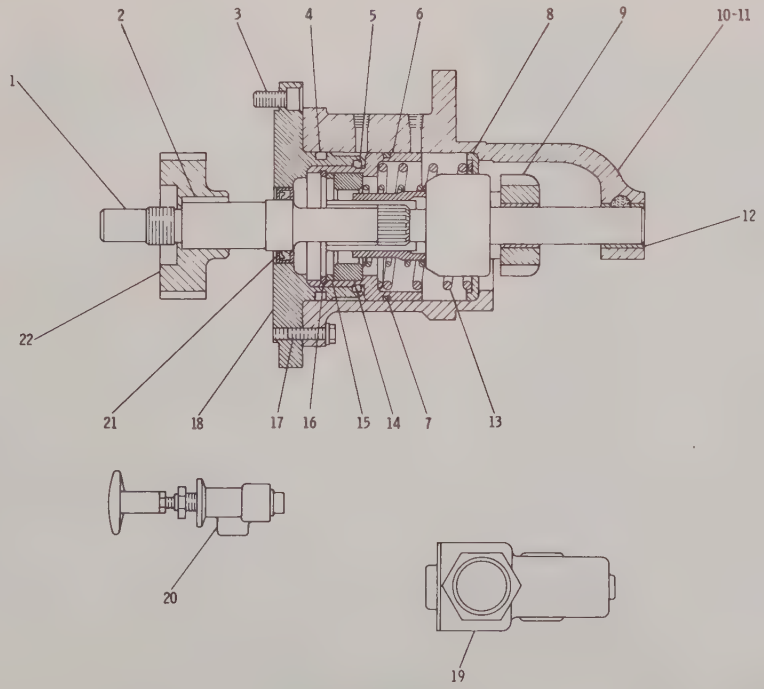

REF. NO	PART NUMBER	DESCRIPTION	QTY
1	4N9566	SHAFT	1
2	4N9567	KEY	1
3	9F5975	BOLT	8
4	6H3977	SEAL	1
5	8F8882	SEAL	1
6	4N4398	PISTON ASSEM. (Includes)	1
7	4N4399	RING	1
8	4N4404	SEAT	1
9	4N9569	CLUTCH ASSEM.	1
10	4N4406	HOUSING ASSEM. (Includes)	1
11	2B4602	PLUG	1
	4N4408	OILER	1
12	4N4407	BUSHING	1
13	4N4403	SPRING	1
14	4N4400	RING	1
15	4N4402	SPACER	1
16	520512	RETAINER	1
17	S1616	BOLT	12
	3B4504	LOCKWASHER	12
18	4N9565	COVER	1
19	4N3411	VALVE	1
20	4N3410	VALVE	1
21	4N4393	SEAL	1
22	4N9568	GEAR (drive-30 teeth)	1

149287

4N6019 AIR START CHANGEOVER GROUP—S.A.E. Opposite Engine Rotation—Field Installation
FOR USE WITH 6L6730 MOTOR ASSEMBLY SHOWN ON PAGES 132 AND 132A

4N4985 AIR START CHANGEOVER GROUP—S.A.E. Standard Engine Rotation—Field Installation
FOR USE WITH 6L6731 MOTOR ASSEMBLY SHOWN ON PAGES 132 AND 132A

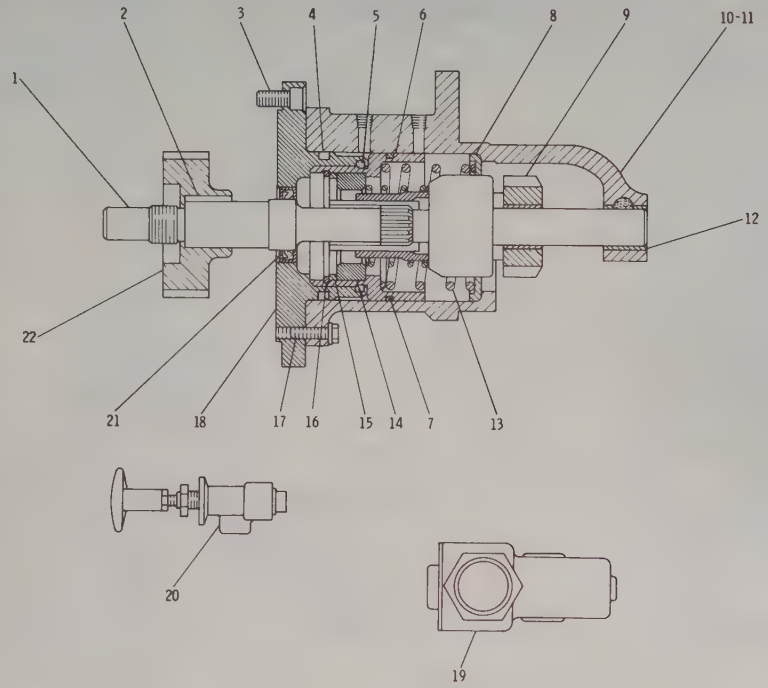

REF. NO	PART NUMBER	DESCRIPTION	QTY
1	4N9566	SHAFT	1
2	4N9567	KEY	1
3	9F5975	BOLT	8
4	6H3977	SEAL	1
5	8F8882	SEAL	1
6	4N4398	PISTON ASSEM. (Includes)	1
7	4N4399	RING	1
8	4N4404	SEAT	1
9	4N4405	CLUTCH ASSEM.	1
10	4N4406	HOUSING ASSEM. (Includes)	1
11	2B4602	PLUG	1
	4N4408	OILER	1
12	4N4407	BUSHING	1
13	4N4403	SPRING	1
14	4N4400	RING	1
15	4N4402	SPACER	1
16	520512	RETAINER	1
17	S1616	BOLT	12
	3B4504	LOCKWASHER	12
18	4N9565	COVER	1
19	4N3411	VALVE	1
20	4N3410	VALVE	1
21	4N4393	SEAL	1
22	4N9568	GEAR (drive-30 teeth)	1

149286

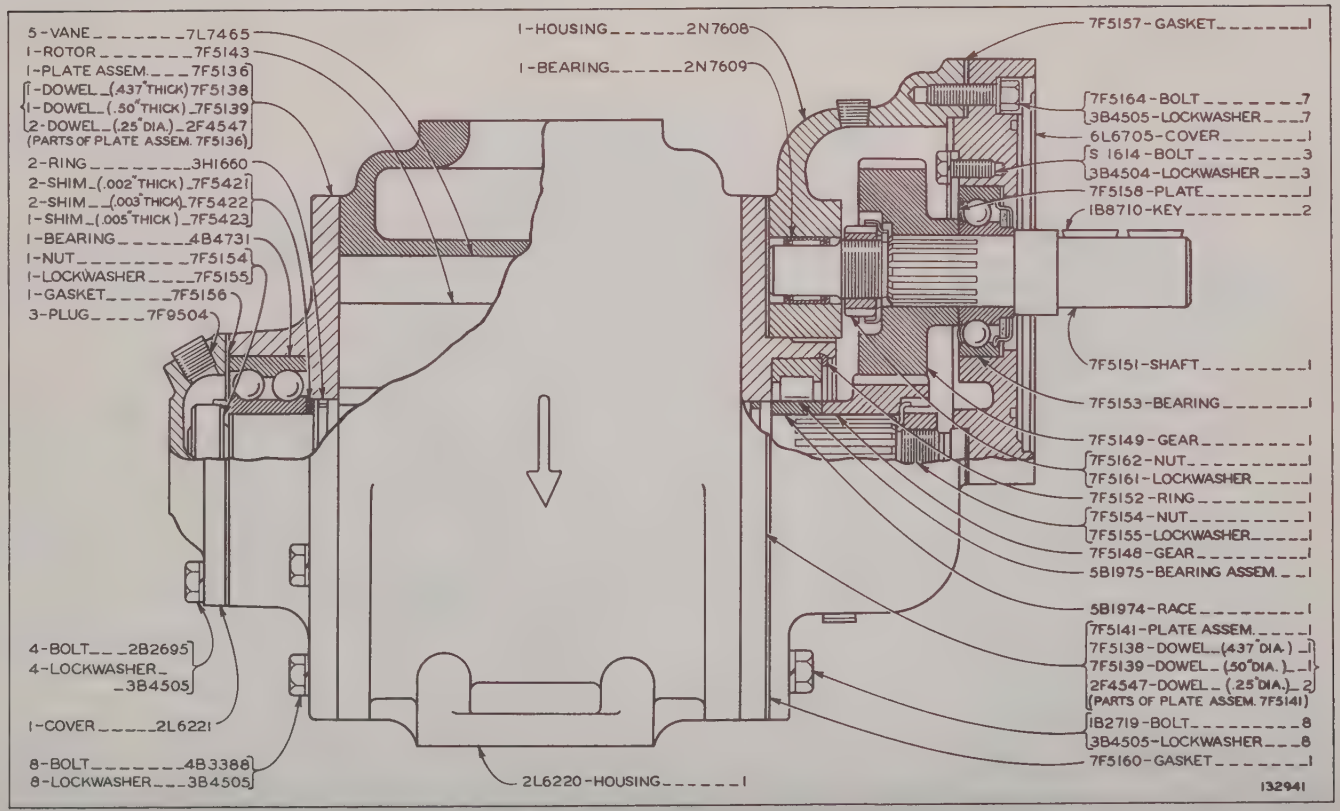

3H3171 AIR MOTOR—S.A.E. Standard Engine Rotation—Type 2
Part of 5L1750 and 6L6731 Air Starting Motor Assemblies shown on Pages 132 and 132A

3H3171 AIR MOTOR—S.A.E. Standard Engine Rotation

Part of 5L1750 and 6L6731 Air Starting Motor Assemblies shown on Pages 132 and 132A

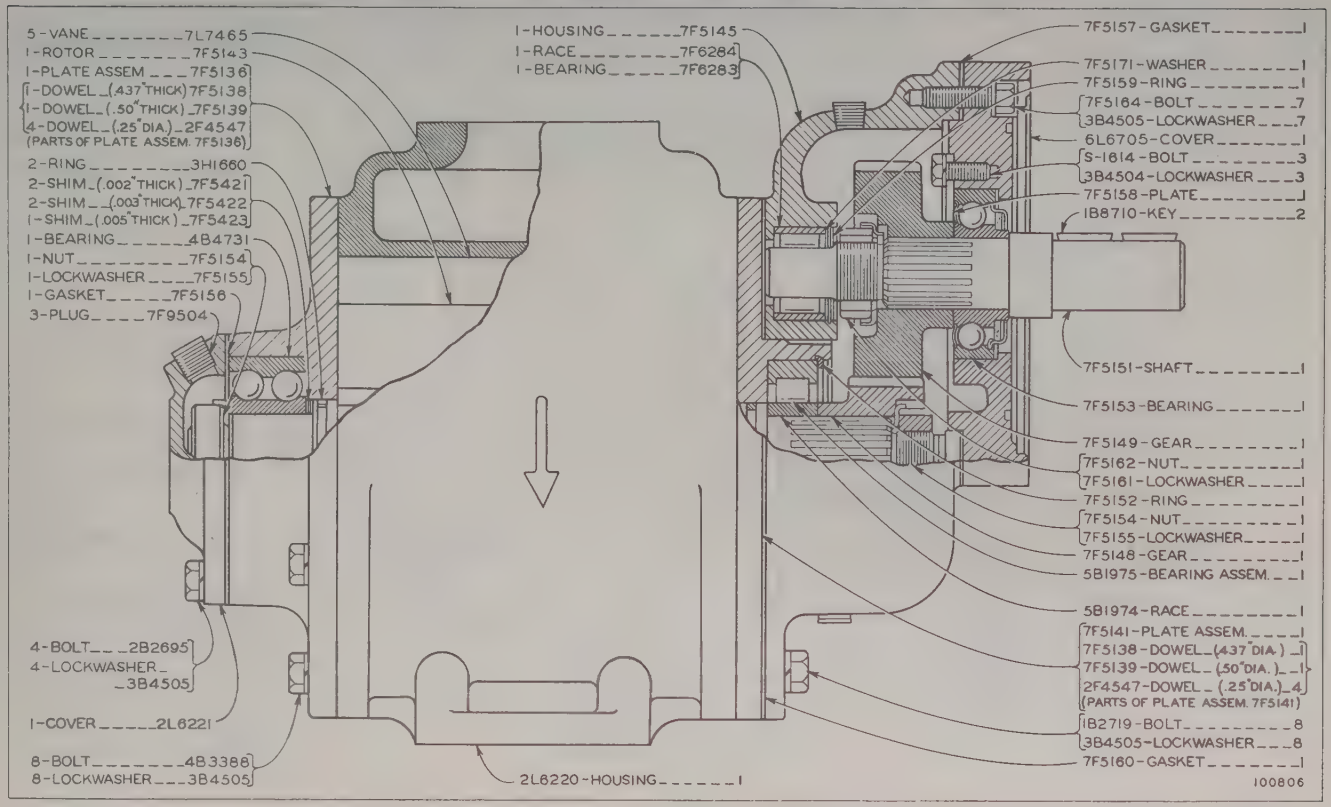

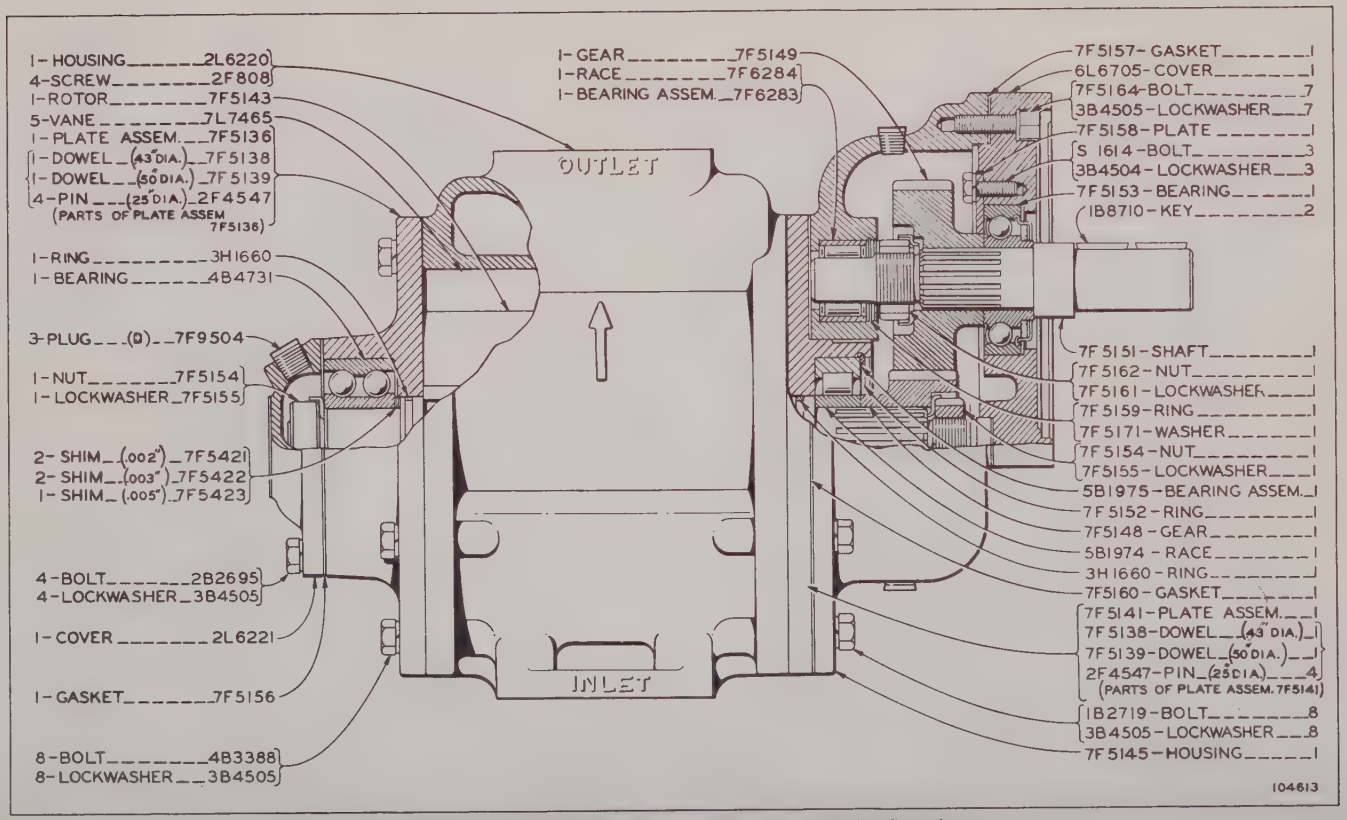

3H3170 AIR MOTOR—S.A.E. Opposite Standard Engine Rotation
Part of 5L1749 and 6L6730 Air Starting Motor Assemblies shown on Page 132

CONSISTS OF:

	4S8784	WIRE (No. 6)--5 FOOT
	4S8785	WIRE (No. 10)--5 FOOT
	4S8787	WIRE (No. 14)--35 FOOT
2	2L8049	TERMINAL (No. 10 SCREW)
1	2L8052	TERMINAL (3/8" SCREW)
2	2L8054	TERMINAL (1/2" SCREW) (USED WITH No. 6 WIRE)
2	2L8065	TERMINAL (No. 8 SCREW)
3	2L8067	TERMINAL (1/4" SCREW)
2	2L8071	TERMINAL (1/2" SCREW) (USED WITH No. 10-12 WIRE)
2	2L8074	TERMINAL (No. 6 SCREW)
21	2L8076	TERMINAL (No. 10 SCREW)
2	2L8079	TERMINAL (3/8" SCREW) (USED WITH No. 14 WIRE)
2	5P1475	TERMINAL--SPRING SPADE (14-16 No. 8 SCREW)
2	5P1476	TERMINAL--SPRING SPADE (14-16 No. 10 SCREW)
2	5P1477	TERMINAL--SPRING SPADE (10-12 No. 8 SCREW)
2	5P1478	TERMINAL--SPRING SPADE (10-12 No. 10 SCREW)
1	5D5569	CONNECTOR--SEALING CLIP
10	1H5166	CLIP (3.50" LONG)
1	2H2143	MARKER (WIRE CODE)
2	2H2965	SPLICE--WIRE
2	4H8310	STRAP--CONNECTOR
6	2L9724	CLIP (2.50" LONG)
2	5L2579	GROMMET--JUNCTION BOX
1	6L8150	JUMPER--TERMINAL STRIP
75	8L8413	TIE (5.50" LONG)
1	3N5681	TIE--CABLE
6	3S2093	TIE (7.31" LONG)
3	8S4626	SPLICER--WIRE

8L4849 WIRING GROUP

Part of 8L4850 Automatic Start-Stop Arrangement listed on Page 134A

		Consists of:	Page
1	8L4244	Junction Box Group	134A
1	8L4245	Starting Motor Group	134B
1	8L4249	Contactor Group	134F
1	8L4285	Shut-Off Group	134E
1	8L4849	Wiring Group	134-1

8L4850 AUTOMATIC START-STOP ARRANGEMENT—24 Volt

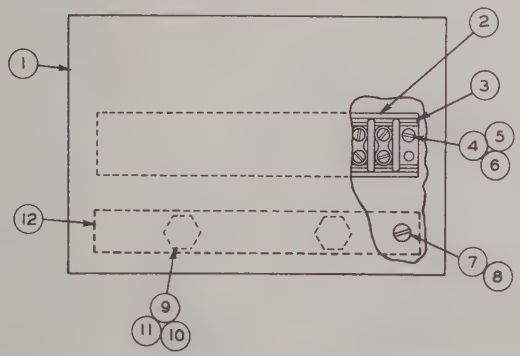

REF NO.	PART NUMBER	DESCRIPTION	QTY
1	8L4236	BOX	1
2	4L6471	STRIP (Marker)	1
3	4L6470	STRIP	1
4	4B1308	BOLT	2
5	4B2047	NUT	2
6	3B4502	LOCKWASHER	2

REF. NO.	PART NUMBER	DESCRIPTION	QTY
7	9B9178	SCREW	2
8	3B4504	LOCKWASHER	2
9	S1588	BOLT	2
	3H2137	SPACER	2
10	3B4506	LOCKWASHER	2
11	4B5271	WASHER	2
12	8L4242	STRAP	1

105213

8L4244 JUNCTION BOX GROUP
Part of 8L4850 Automatic Start-Stop Arrangement

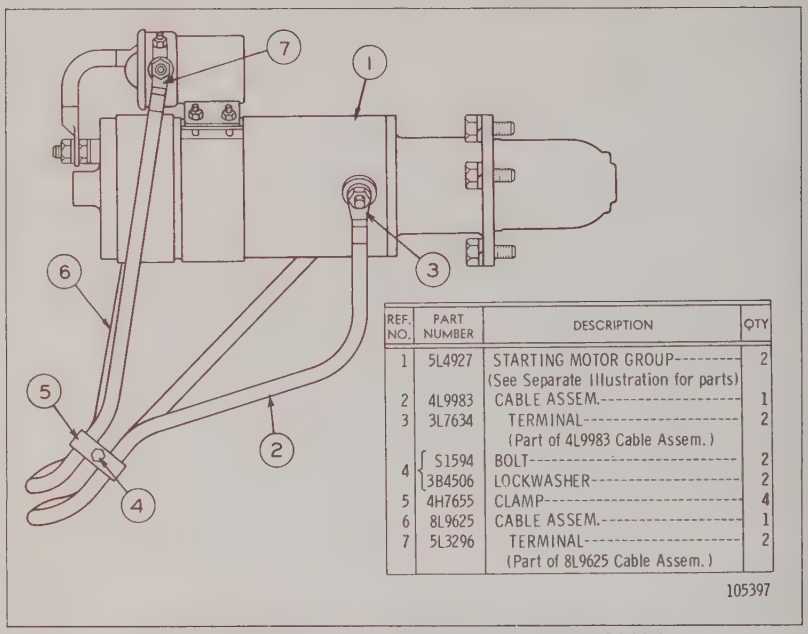

REF. NO.	PART NUMBER	DESCRIPTION	QTY
1	5L4927	STARTING MOTOR GROUP--------- (See Separate Illustration for parts)	2
2	4L9983	CABLE ASSEM.----------	1
3	3L7634	TERMINAL---------- (Part of 4L9983 Cable Assem.)	2
4	S1594	BOLT----------	2
	3B4506	LOCKWASHER----------	2
5	4H7655	CLAMP----------	4
6	8L9625	CABLE ASSEM.----------	1
7	5L3296	TERMINAL---------- (Part of 8L9625 Cable Assem.)	2

8L4245 ELECTRIC STARTING MOTOR GROUP—24 Volt
Part of 8L4850 Automatic Start-Stop Arrangement listed on Page 134A

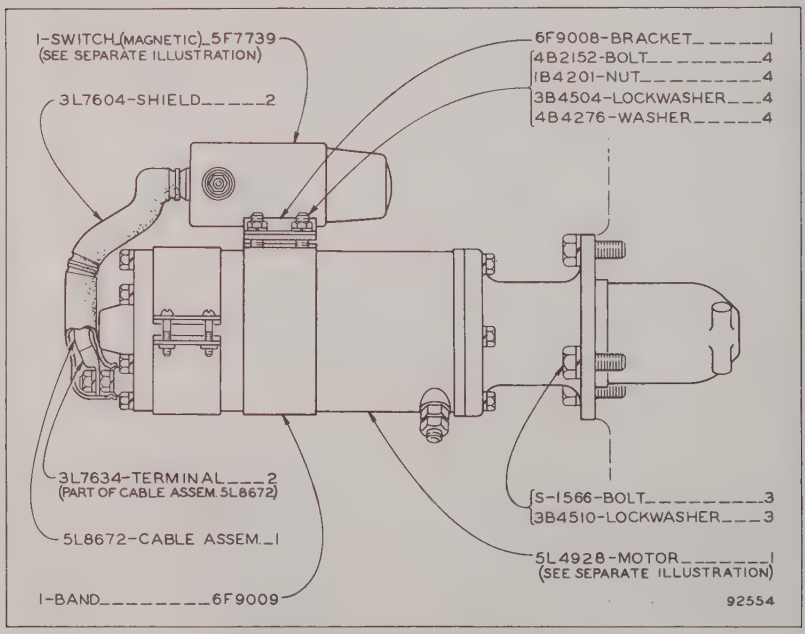

5L4927 MOTOR GROUP—24 Volt
Part of 8L4245 Electric Starting Motor Group
5F7739 Switch parts are shown on Page 134D

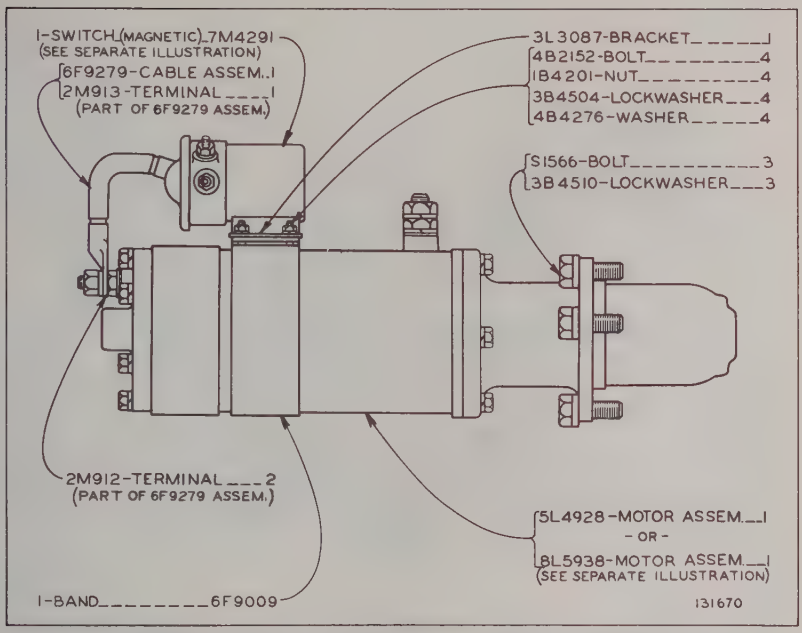

5L4927 ELECTRIC STARTING MOTOR GROUP—24 Volt—Type 2
Part of 8L4245 Electric Starting Motor Group
8L5938 and 5L4928 Motor parts are shown on Pages 134B-2 & 134C

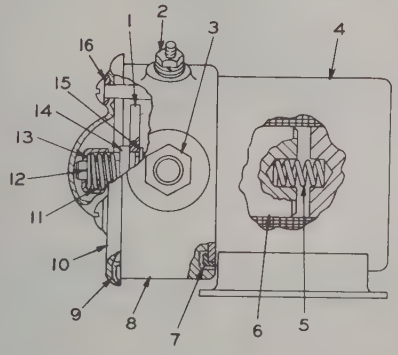

REF. NO.	PART NUMBER	DESCRIPTION	QTY
1	7M7548	CONTACT	1
2	7F7622	NUT	2
	7H2079	LOCKWASHER	2
3	6H5431	NUT	2
	6H8351	LOCKWASHER	2
	9B9082	WASHER	2
4	7M7547	CASE & COIL ASSEM.	1
C 5	1S9371	SPRING	1
6	2S1536	PLUNGER ASSEM.	1
7	7F4795	GASKET	1
8	7M7552	CAP ASSEM.	1
9	7F4797	GASKET	1
10	5H7797	COVER	1
11	7M7553	SPRING	1
12	7M7621	WASHER	2
13	1S9372	WASHER	1
14	7M7550	WASHER	1
15	7M7549	WASHER	1
16	3H442	SEAL	3

C INDICATES CHANGE

203785

7M4291 MAGNETIC SWITCH ASSEMBLY—24 Volt
Part of 5L4927 Electric Starting Motor Group

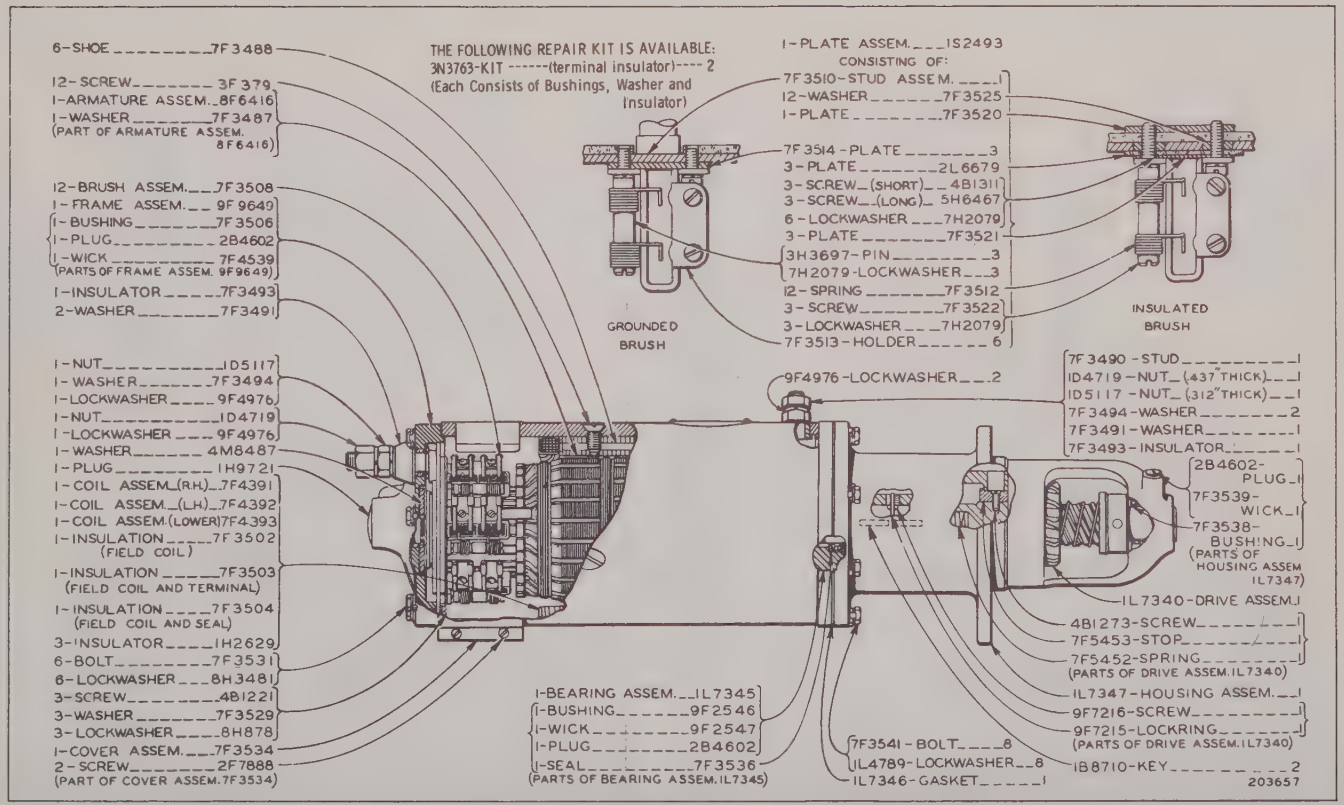

8L5938 MOTOR ASSEMBLY—24 Volt or 32 Volt
Part of 5L4927 Electric Starting Motor Group shown on Page 134B-1

5L4928 MOTOR ASSEMBLY—24 Volt
Part of 5L4927 Electric Starting Motor Group

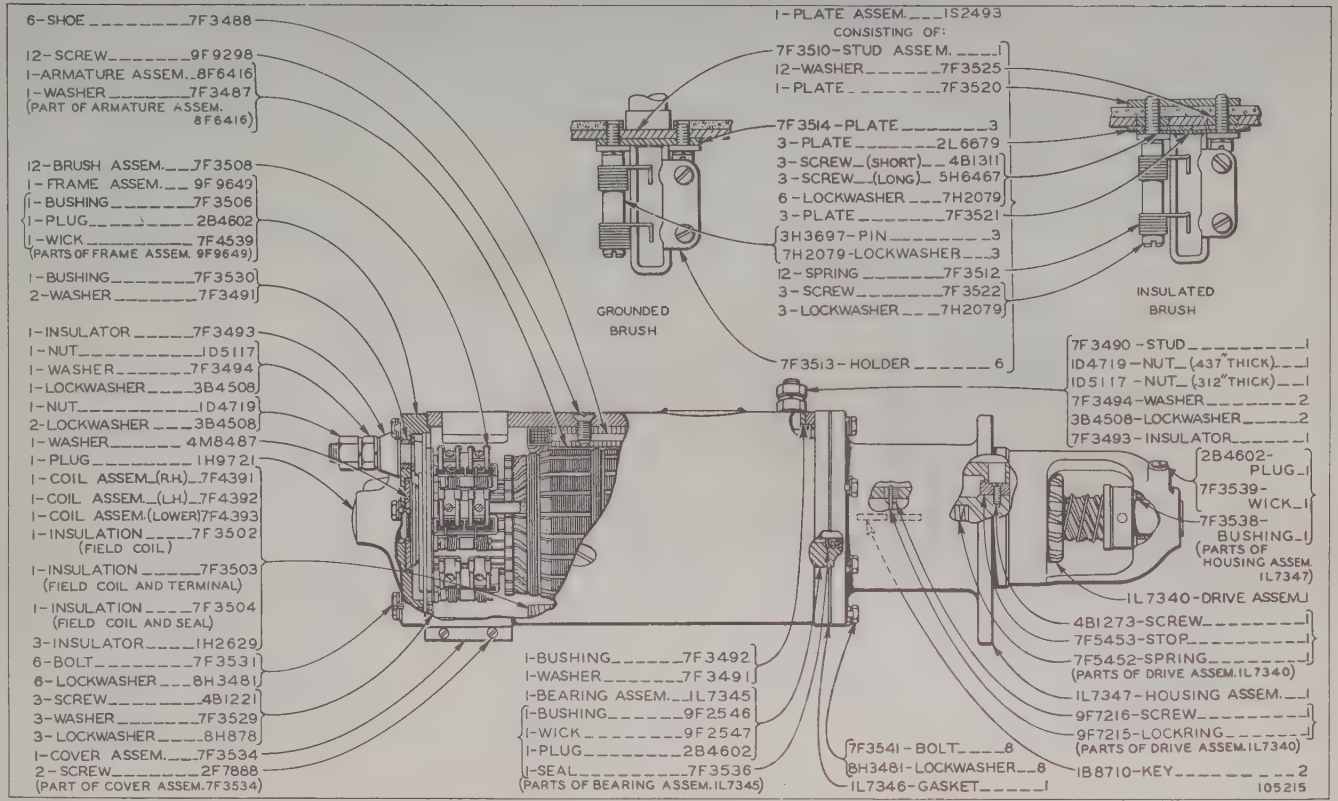

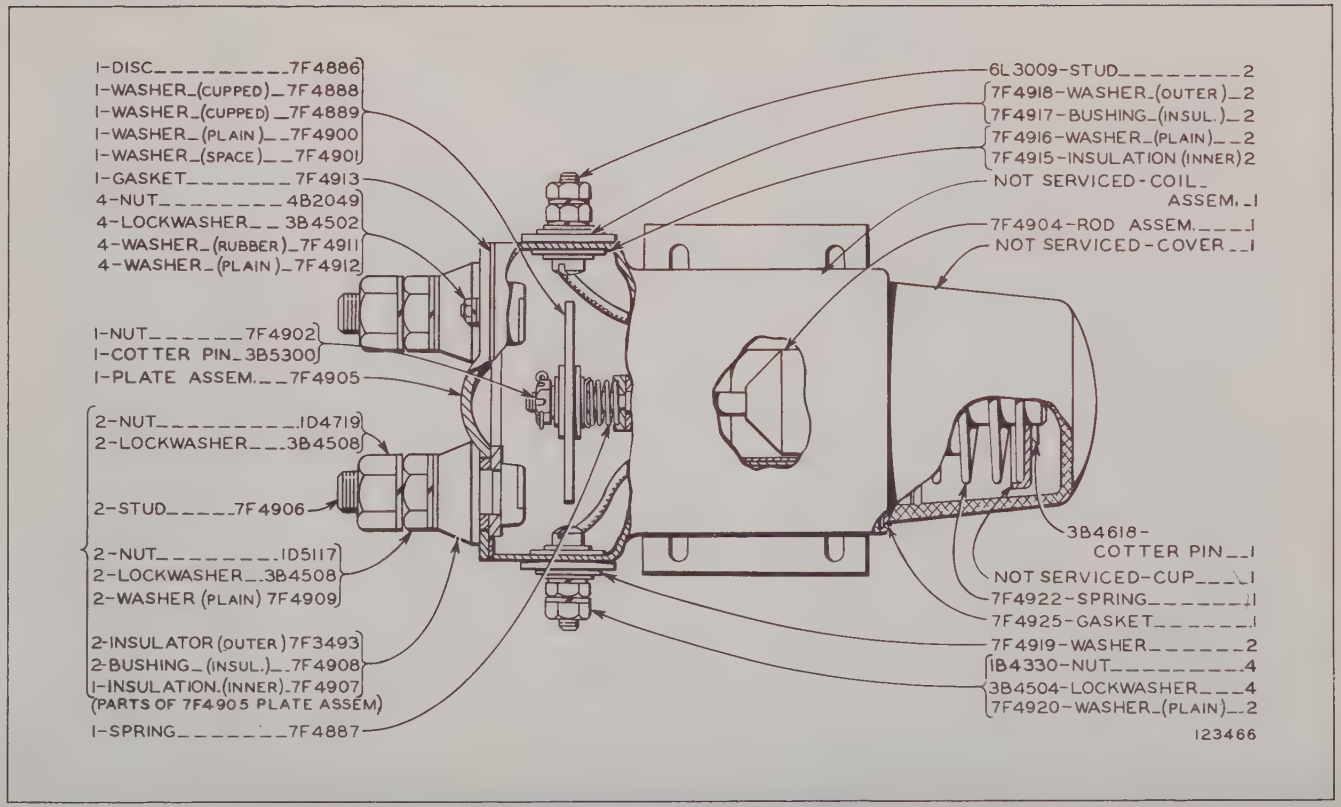

5F7739 MAGNETIC SWITCH

Part of 5L4927 Electric Starting Motor Group shown on Page 134B

8L4285 SHUT-OFF GROUP—24 Volt

Part of 8L4850 Automatic Start-Stop Arrangement listed on Page 134A

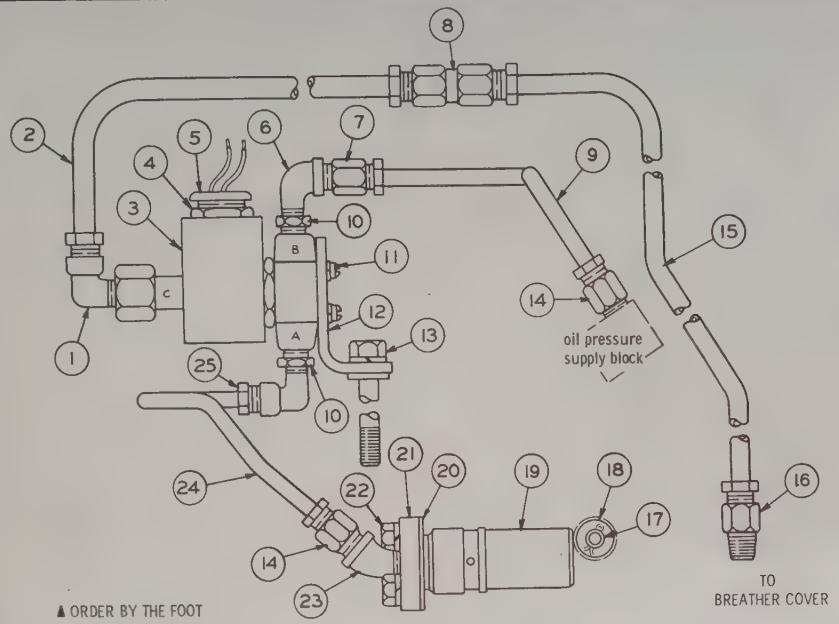

REF. NO.	PART NUMBER	DESCRIPTION	QTY
1	3B8999	FITTING	1
	8F8997	NUT	1
		(Part of 3B8999 Fitting)	

REF. NO.	PART NUMBER	DESCRIPTION	QTY
▲ 2	4S8457	TUBE --------(Drain)-------22.66"	
3	6L3040	SOLENOID VALVE	1
4	3F2065	NUT	2

REF. NO.	PART NUMBER	DESCRIPTION	QTY
5	4F8184	BUSHING	1
6	3B6552	STREET ELL	1
7	7L5031	FITTING	1
	1F1344	NUT	1
		(Part of 7L5031 Fitting)	
8	1F5194	FITTING	1
	8F8997	NUT	2
		(Part of 1F5194 Fitting)	
9	7L2134	TUBE---------(Supply)----------	1
10	3B6768	BUSHING	2
11	4B1297	SCREW	2
	3B4501	LOCKWASHER	2
12	5L9194	BRACKET	1
13	1A5964	BOLT	2
	3B4506	LOCKWASHER	2
	T431	WASHER	2
14	1F7552	FITTING	2
	1F1344	NUT	2
		(1 in each 1F7552 Fitting)	
▲ 15	4S8457	TUBE---------(Drain)--------22"	
16	3B8996	FITTING	1
	8F8997	NUT	1
		(Part of 3B8996 Fitting)	
17	6B8193	PIN	1
18	5F547	WASHER	1
19	5L8951	PISTON	1
20	6L3398	GASKET	1
21	5L8952	COVER	1
22	4B3388	BOLT	2
	3B4505	LOCKWASHER	2
23	3B7730	ELBOW	1
24	7L2131	TUBE	1
25	3B8998	FITTING	1
	1F1344	NUT	1
		(Part of 3B8998 Fitting)	

105399

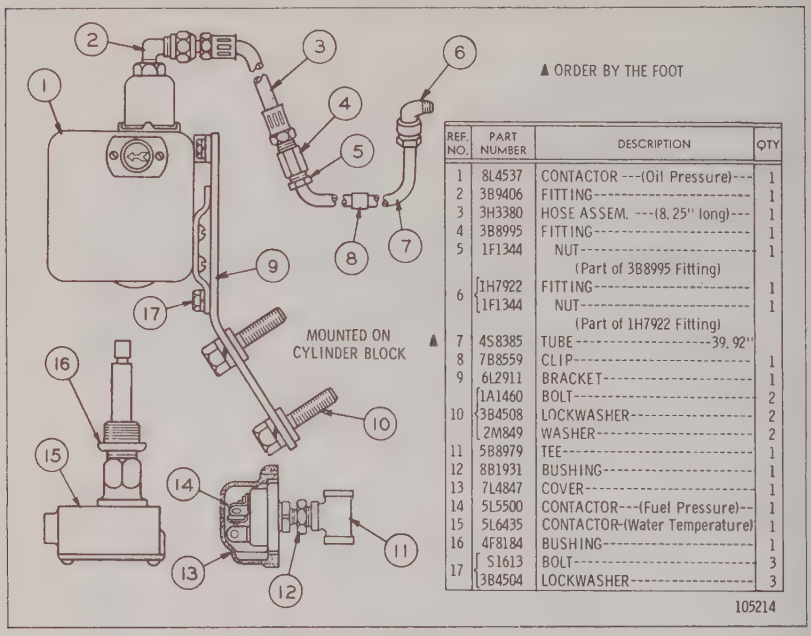

▲ ORDER BY THE FOOT

REF. NO.	PART NUMBER	DESCRIPTION	QTY
1	8L4537	CONTACTOR ---(Oil Pressure)---	1
2	3B9406	FITTING	1
3	3H3380	HOSE ASSEM. ---(8.25" long)---	1
4	3B8995	FITTING	1
5	1F1344	NUT	1
		(Part of 3B8995 Fitting)	
6	1H7922	FITTING	1
	1F1344	NUT	1
		(Part of 1H7922 Fitting)	
7	4S8385	TUBE ----------39.92"	
8	7B8559	CLIP	1
9	6L2911	BRACKET	1
10	1A1460	BOLT	2
	3B4508	LOCKWASHER	2
	2M849	WASHER	2
11	5B8979	TEE	1
12	8B1931	BUSHING	1
13	7L4847	COVER	1
14	5L5500	CONTACTOR---(Fuel Pressure)--	1
15	5L6435	CONTACTOR-(Water Temperature)	1
16	4F8184	BUSHING	1
17	S1613	BOLT	3
	3B4504	LOCKWASHER	3

105214

8L4249 CONTACTOR GROUP
Part of 8L4850 Automatic Start-Stop Arrangement
listed on Page 134A

8L4249 CONTACTOR GROUP—Type 2

Part of 8L4850 Automatic Start-Stop Arrangement listed on Page 134A

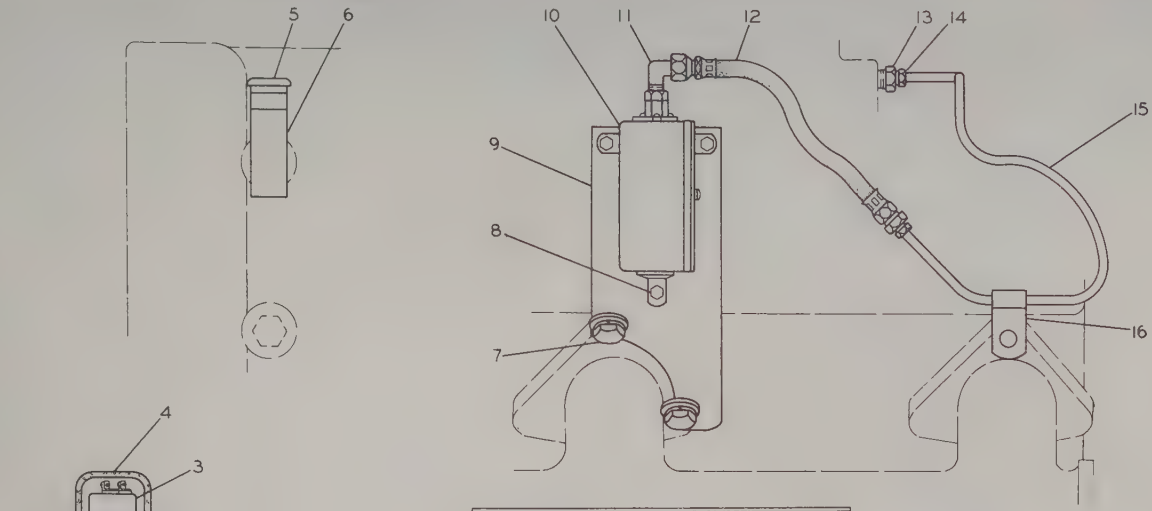

REF. NO.	PART NUMBER	DESCRIPTION	QTY
1	5B8978	TEE	1
2	6B5072	BUSHING	1
3	2L3402	SWITCH	1
4	7L4847	COVER	1
5	4F8184	BUSHING	1
6	5L6435	CONTACTOR-----(Water Temp.)--	1
7	1A1460	BOLT	2
	3B4508	LOCKWASHER	2
	2M849	WASHER	2
8	S1613	BOLT	3
	3B4504	LOCKWASHER	3
9	6L2911	BRACKET	1
10	2N7124	SWITCH-------(Pressure)-------	1
11	3B9406	FITTING	1
12	3H3380	HOSE ASSEM. -----(8.25" Long)---	1
13	3B8995	FITTING	2
14	1F1344	NUT	1
▲ 15	4S8385	TUBE----------35.97"	
16	7B8559	CLIP	1

▲ ORDER BY THE FOOT

114778

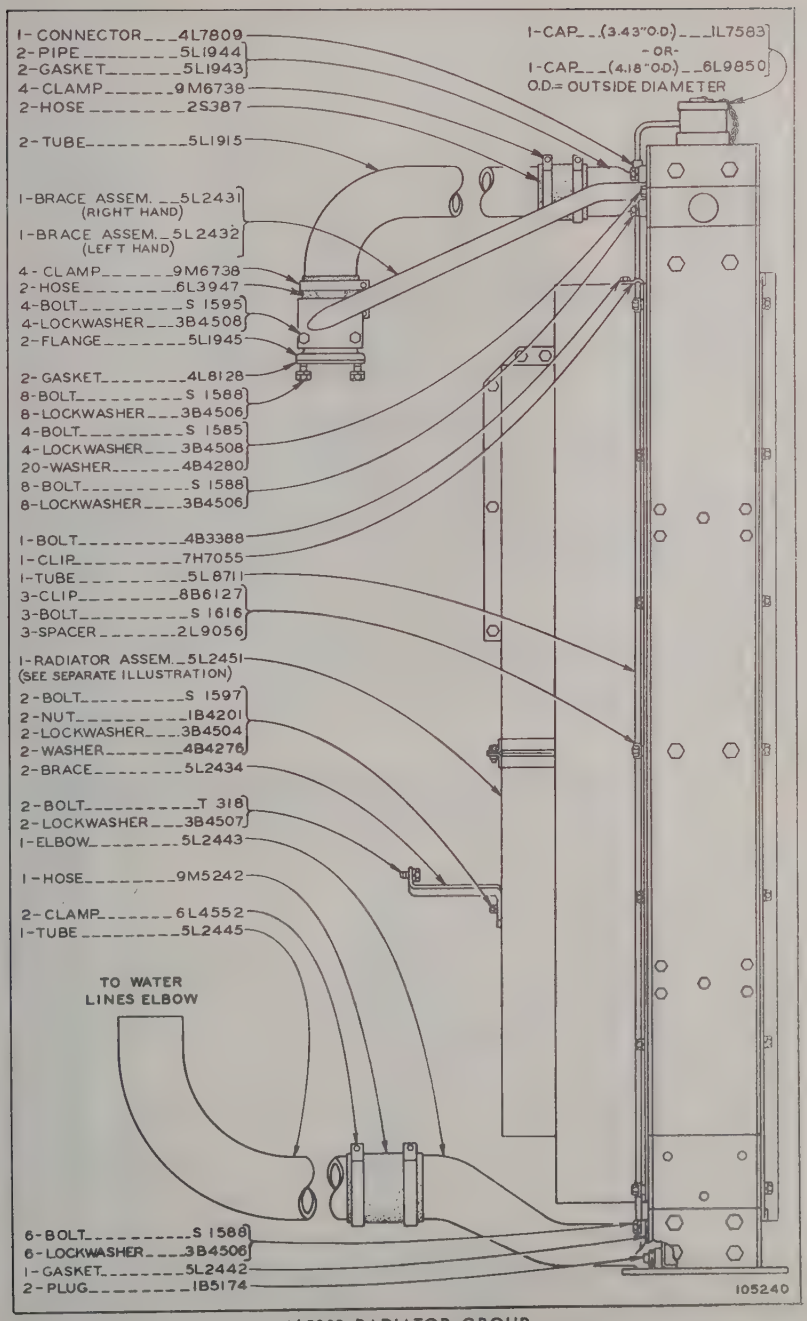

5L2382 RADIATOR GROUP

565 H.P. at 1300 R.P.M. without Fan, with Torque Converters at 70% efficiency, 80% load factor in 125° F. Ambient Air. 565 H.P. at 1300 R.P.M. without Fan, without Torque Converter, 100% load factor in 125° F. Ambient Air

5L2451 Radiator Assembly parts are shown on Page 136

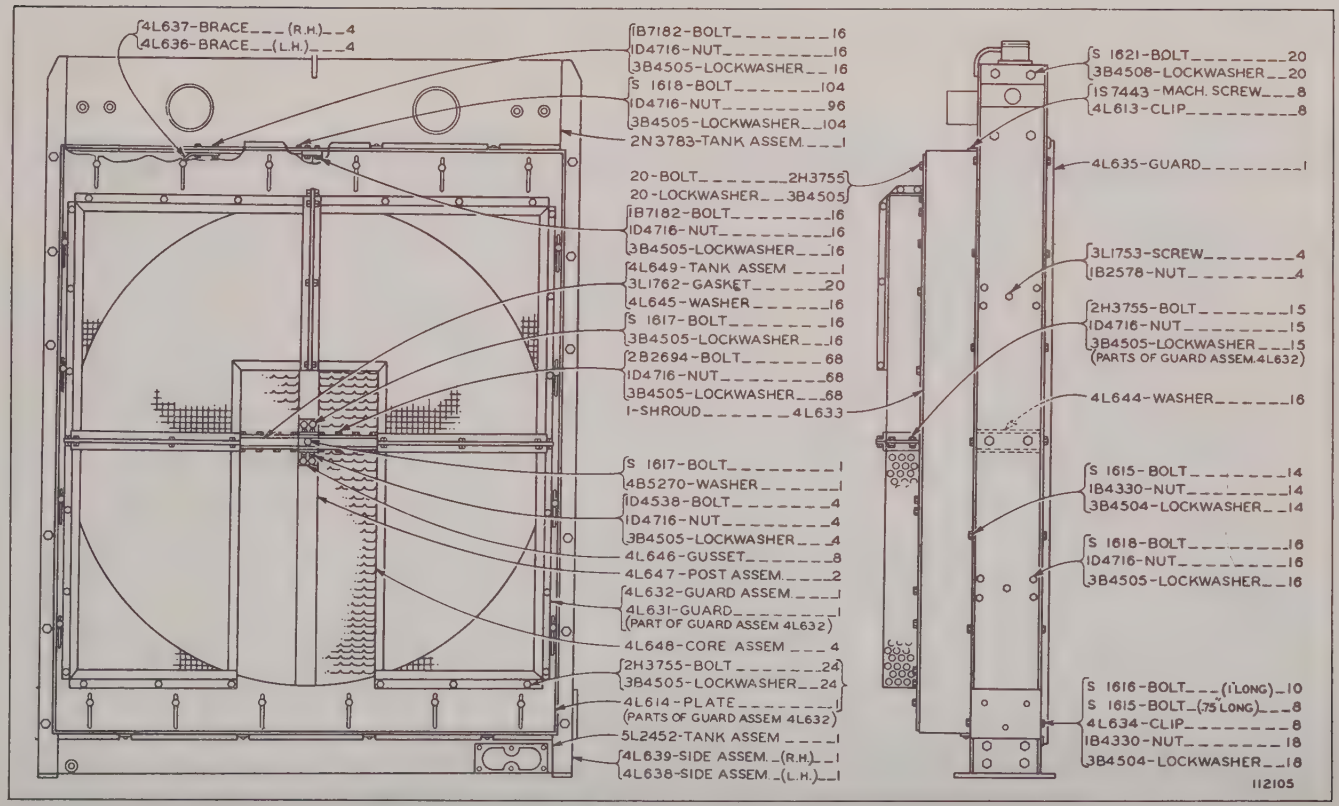

5L2451 RADIATOR ASSEMBLY

Part of 5L2382 Radiator Group shown on Page 135

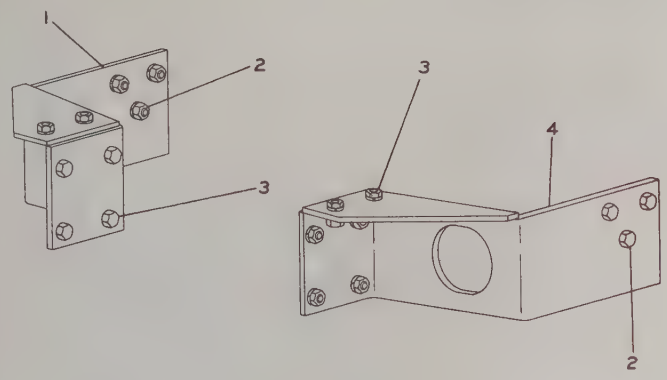

REF. NO.	PART NUMBER	DESCRIPTION	QTY
1	5L2378	SUPPORT ASSEM. ---(Left Hand)---	1
2	S1589	BOLT---------(1.75" Long)--------	6
	3B4510	LOCKWASHER----------	6
3	L1178	BOLT----------(2" Long)----------	12
	1B4331	NUT----------	12
	3B4512	LOCKWASHER----------	12
4	5L2377	SUPPORT ASSEM. ---(Right Hand)--	1

130478

5L2381 RADIATOR MOUNTING GROUP—Engine Mounted

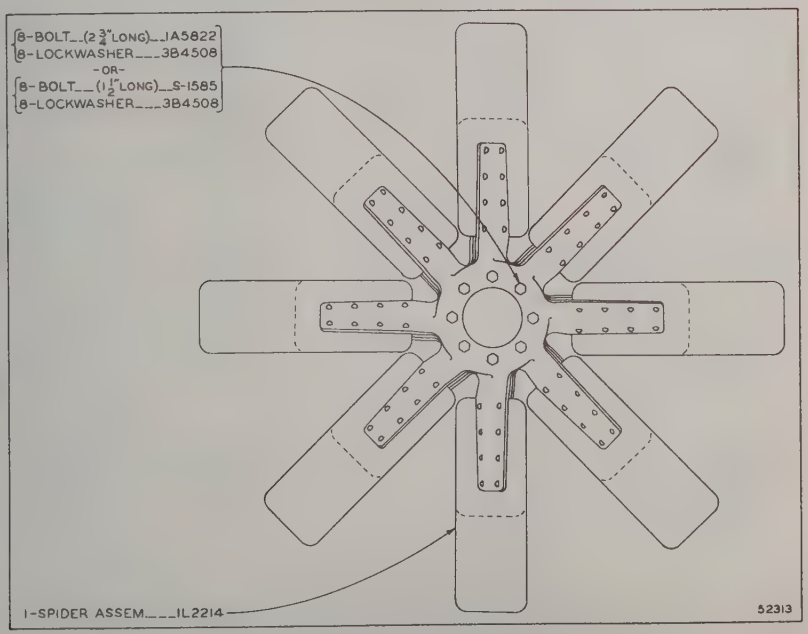

3L6834 FAN GROUP—54 inch

Note: This Group provides a blower type fan for S.A.E. Standard Engine Rotation and suction type fan for S.A.E. Opposite Standard Engine Rotation

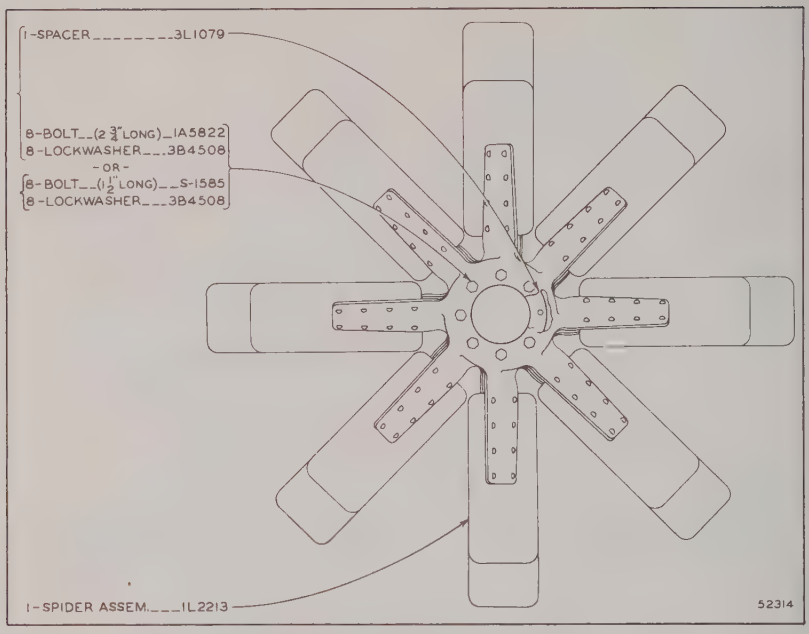

3L6835 FAN GROUP—54 inch

Note: This Group provides a suction type fan for S.A.E. Standard Engine Rotation and blower type fan for S.A.E. Opposite Standard Engine Rotation

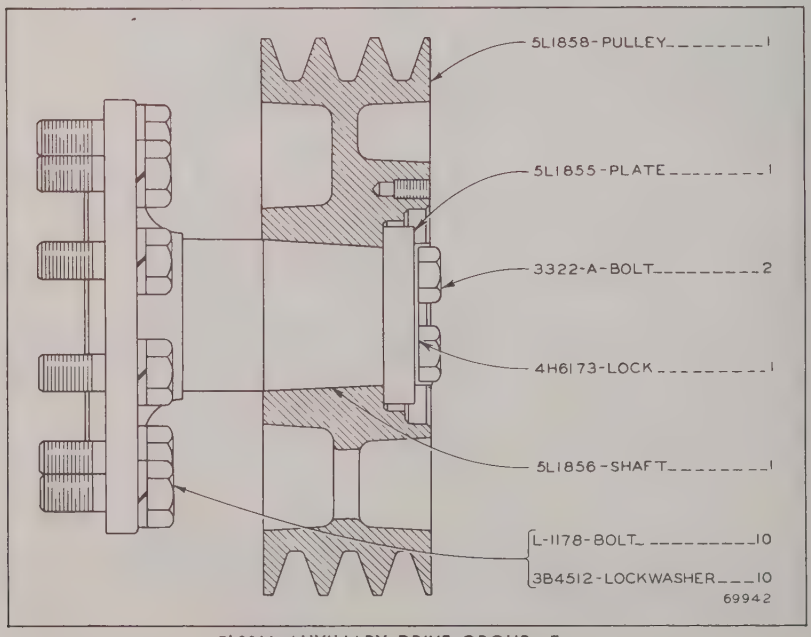

5L2066 AUXILIARY DRIVE GROUP—Front

Also part of 5L1980 Fan Drive Group

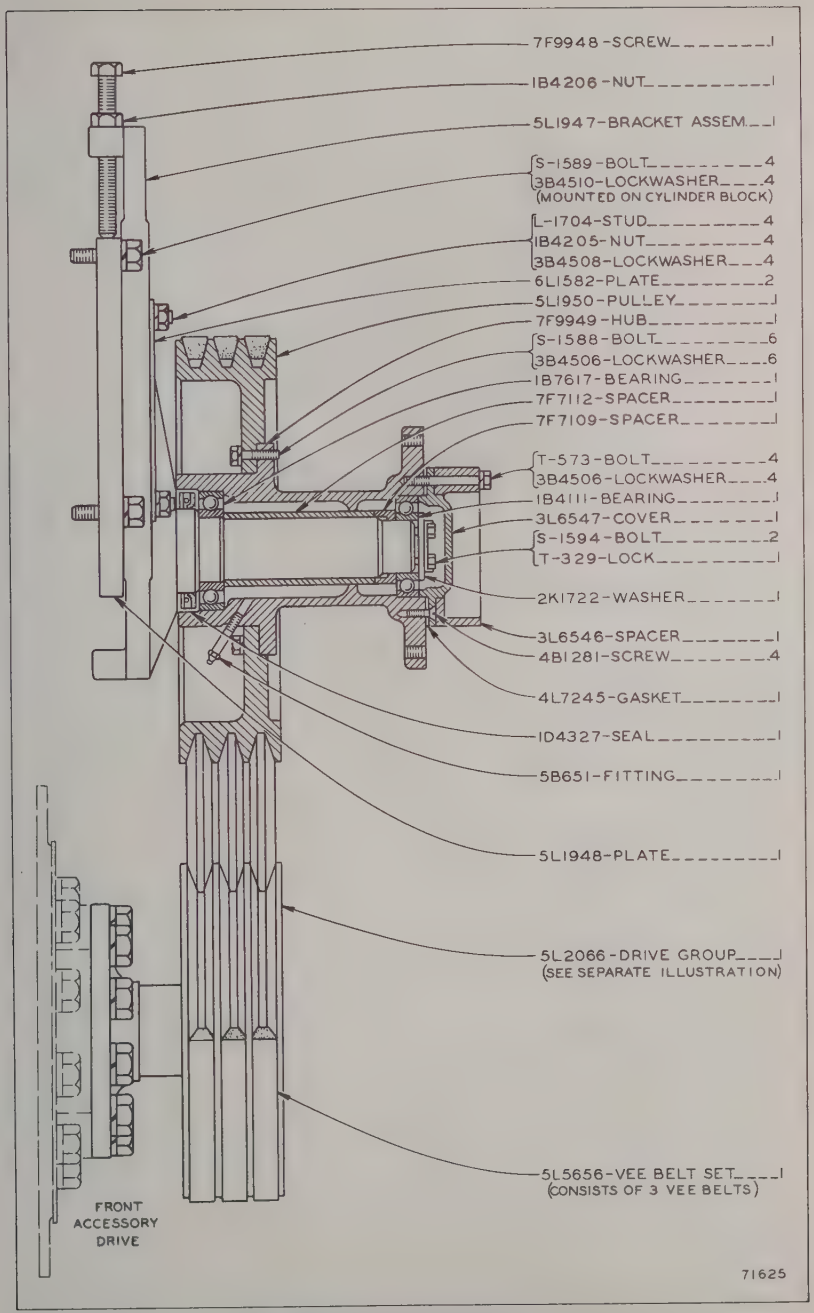

5L1980 FAN DRIVE GROUP—Type 1
For driving 54 inch Fans

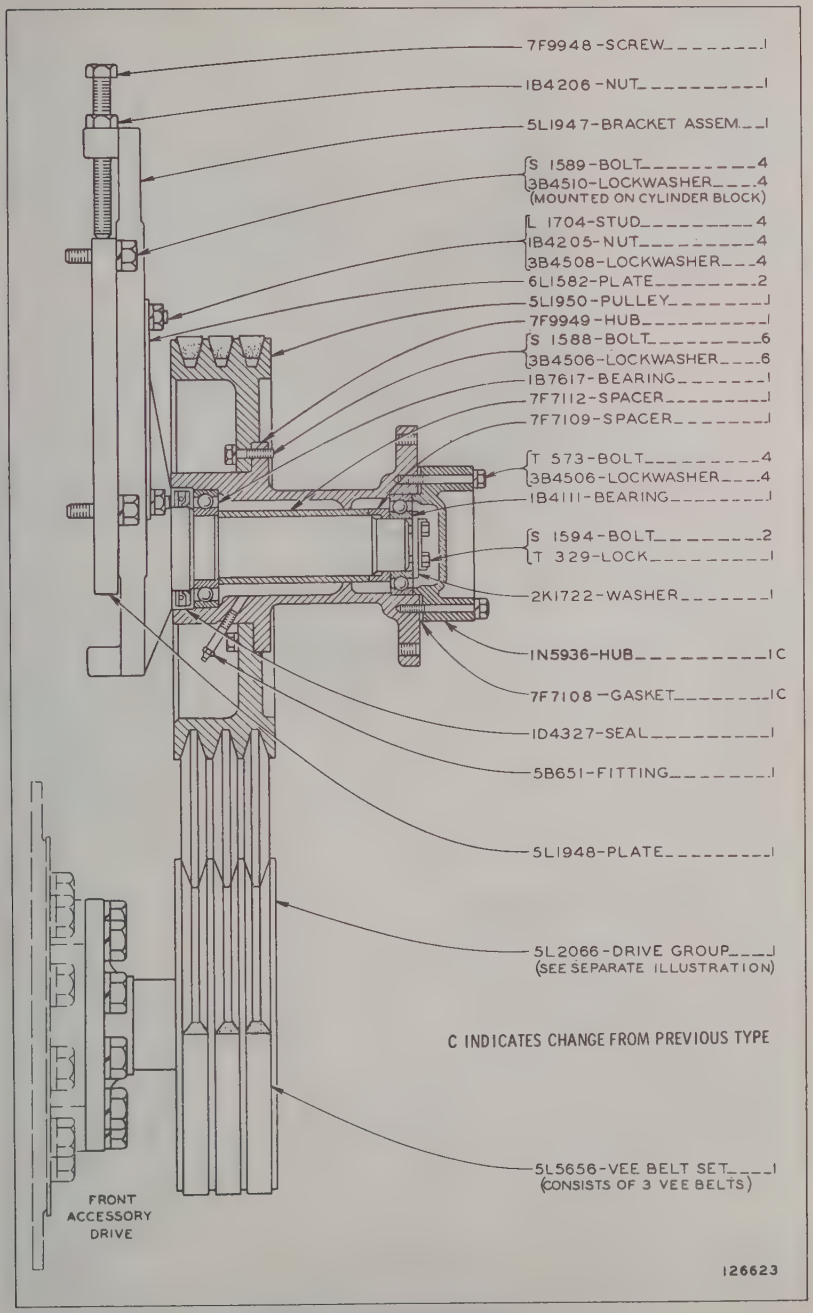

5L1980 FAN DRIVE GROUP—Type 2
5L2066 Auxiliary Drive parts are shown on Page 138
For driving 54 inch Fans

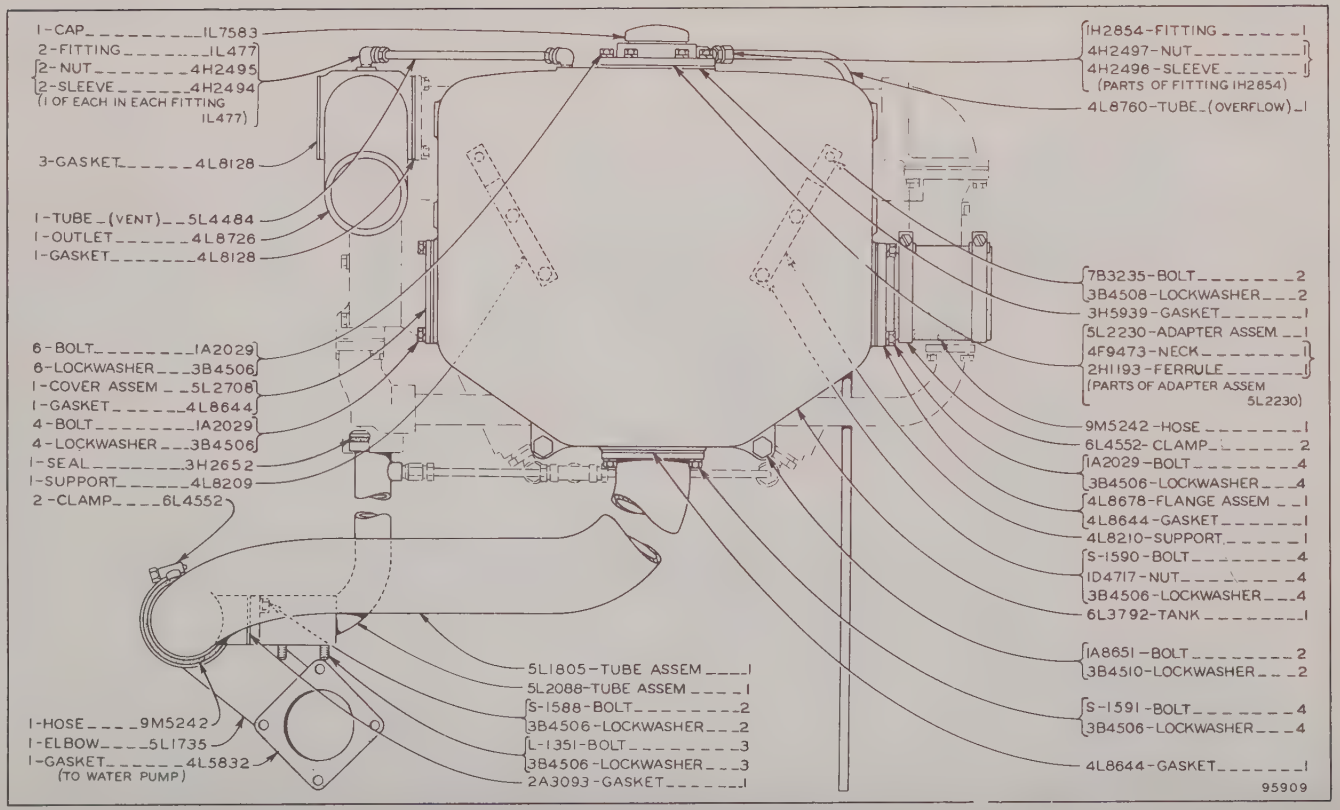

5L2745 SURGE TANK AND WATER LINES GROUP—First Type
Effective with Serial No. 68B675

		Consists of:	Page
1	4L1138	Front Accessory Drive Group.....	160
1	2N8304	Auxiliary Pump and Lines Group.....	140B
6	3B4506	Lockwasher	
6	S-1619	Bolt	

2N9505 FRESH WATER PUMP AND LINES ARRANGEMENT
S.A.E. STANDARD ENGINE ROTATION. Effective with
Serial No. 68B1064. Only separate parts serviced

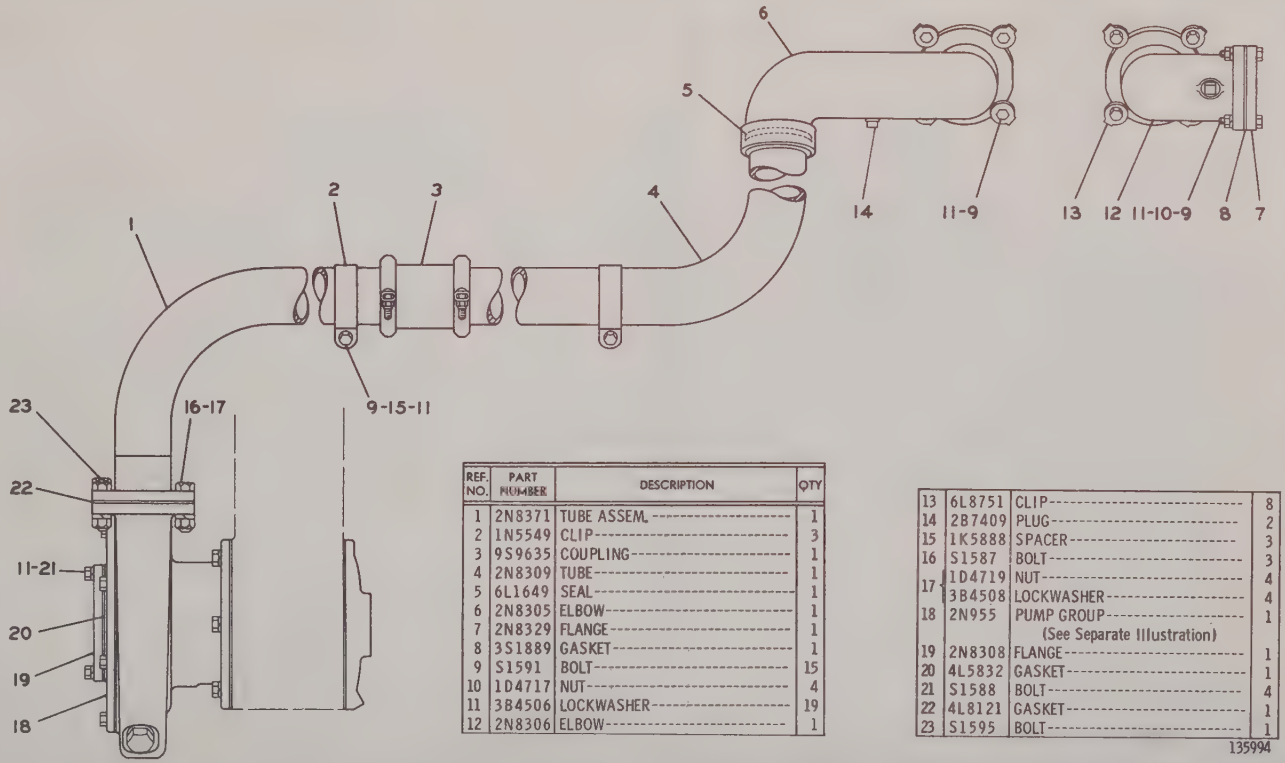

REF. NO.	PART NUMBER	DESCRIPTION	QTY
1	2N8371	TUBE ASSEM.	1
2	1N5549	CLIP	3
3	9S9635	COUPLING	1
4	2N8309	TUBE	1
5	6L1649	SEAL	1
6	2N8305	ELBOW	1
7	2N8329	FLANGE	1
8	3S1889	GASKET	1
9	S1591	BOLT	15
10	1D4717	NUT	4
11	3B4506	LOCKWASHER	19
12	2N8306	ELBOW	1
13	6L8751	CLIP	8
14	2B7409	PLUG	2
15	1K5888	SPACER	3
16	S1587	BOLT	3
17	1D4719	NUT	4
	3B4508	LOCKWASHER	4
18	2N955	PUMP GROUP (See Separate Illustration)	1
19	2N8308	FLANGE	1
20	4L5832	GASKET	1
21	S1588	BOLT	4
22	4L8121	GASKET	1
23	S1595	BOLT	1

135994

2N8304 FRESH WATER AUXILIARY PUMP AND LINES GROUP—S.A.E. STANDARD ENGINE ROTATION
Effective with Serial No. 68B1064. Part of 2N9505 Pump & Lines
Arrangement listed on Page 140A

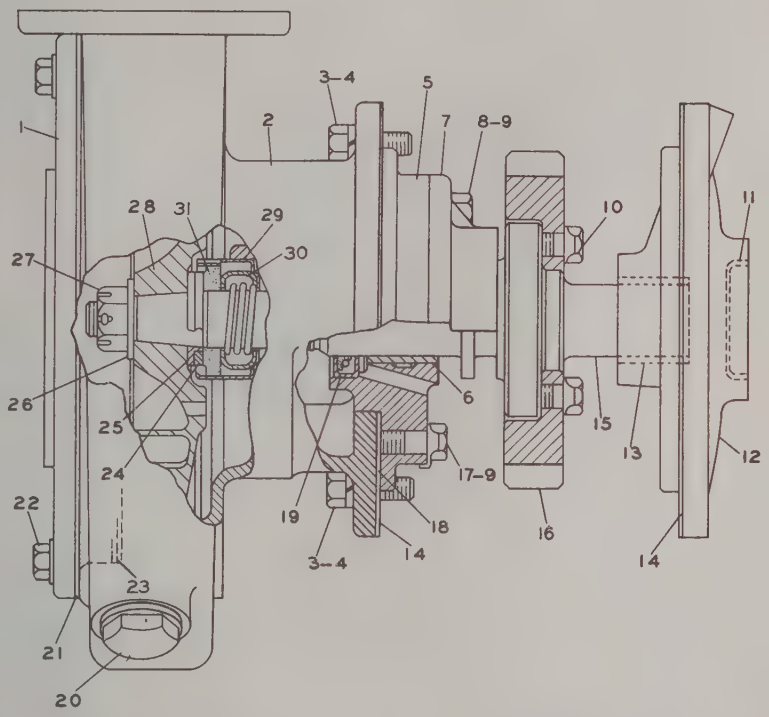

1P6995-REBUILD KIT--------1
(Consists of all parts marked ▲)

REF. NO.	PART NUMBER	DESCRIPTION	QTY
1	4L6231	COVER	1
2	1N5570	HOUSING ASSEM.	1
3	1A2029	BOLT--------(1.125" long)--------	6
		or	
	S1588	BOLT--------(1.25" Long)--------	6
4	3B4506	LOCKWASHER	
5	4L3761	RETAINER ASSEM.	1
▲ 6	5L2660	BEARING	1
		(Part of 4L3761 Assem.)	
▲ 7	4L3756	BEARING	1
8	S1571	BOLT	4
9	7F7510	LOCK	6
10	6F7030	BOLT	6
	4L3759	LOCK	3
▲ 11	3F5022	PLUG	1
12	4L3748	RETAINER ASSEM.	1
▲ 13	5L2660	BEARING	1
		(Part of 4L3748 Assem.)	
14	4L3437	GASKET	2
▲ 15	2N889	SHAFT	1

REF. NO.	PART NUMBER	DESCRIPTION	QTY
▲ 16	5L4074	GEAR----------(31 Teeth)--------	1
17	3B1915	BOLT	2
18	4L9965	GASKET------(Retainer)----------	1
19	2N2560	SEAL	1
20	3F1357	PLUG	1
	5B3265	GASKET	1
21	4L6706	GASKET	10
22	3H5841	BOLT	8
	5L5840	WASHER	8
23	1H8278	SEAL	1
24	2S3966	RING	1
25	3S3535	SEAL	1
▲ 26	6F2691	WASHER	1
▲ 27	3H2018	NUT	1
▲	3F2771	COTTER PIN	1
▲ 28	7L104	IMPELLER	1
29	9S5169	SEAL ASSEM.	1
30	6H3491	BELLOWS ASSEM.	1
31	9S5168	WASHER	1
		(Parts of 9S5169 Assem.)	

127242

2N955 FRESH WATER PUMP GROUP
Effective with Serial No. 68B1064
Part of 2N8304 Auxiliary Pump & Lines Group

5L2745 SURGE TANK AND WATER LINES GROUP—Second Type

Effective with Serial No. 68B675

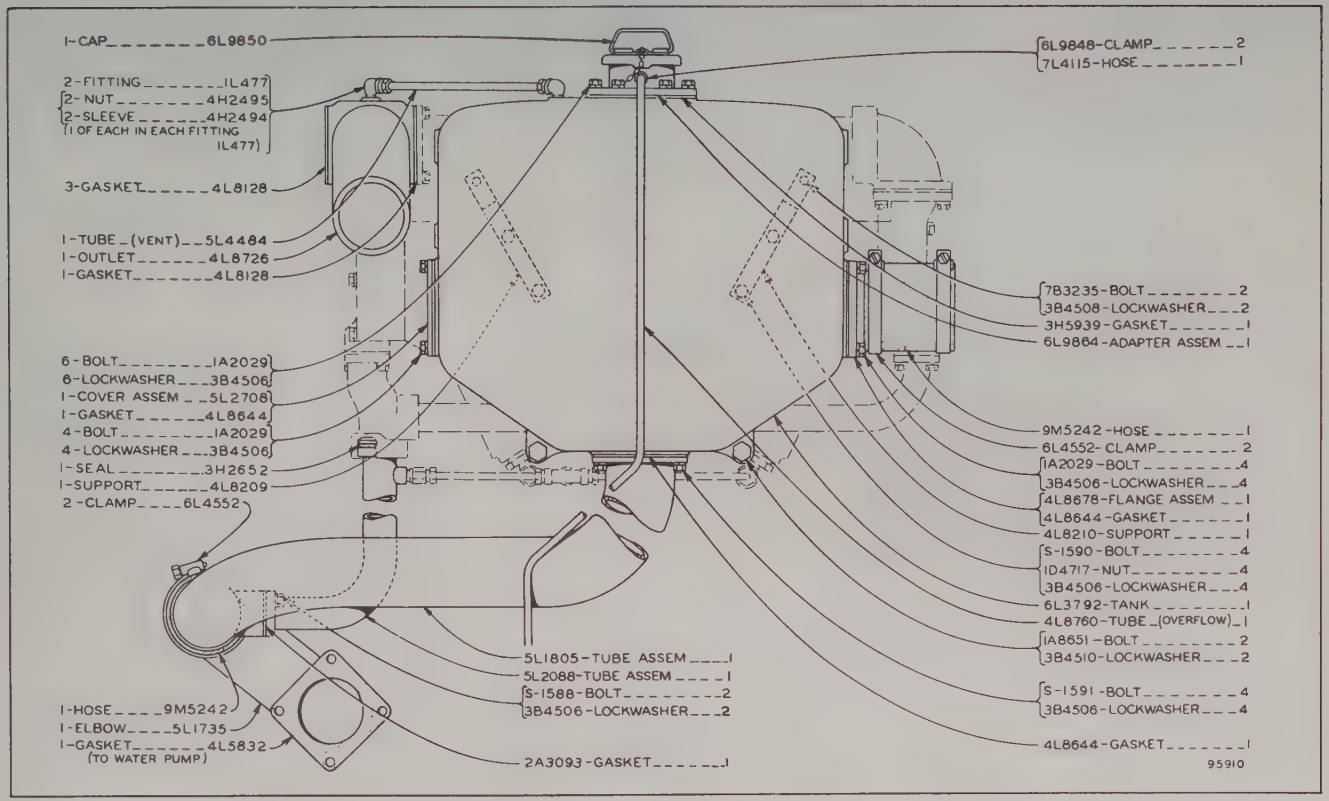

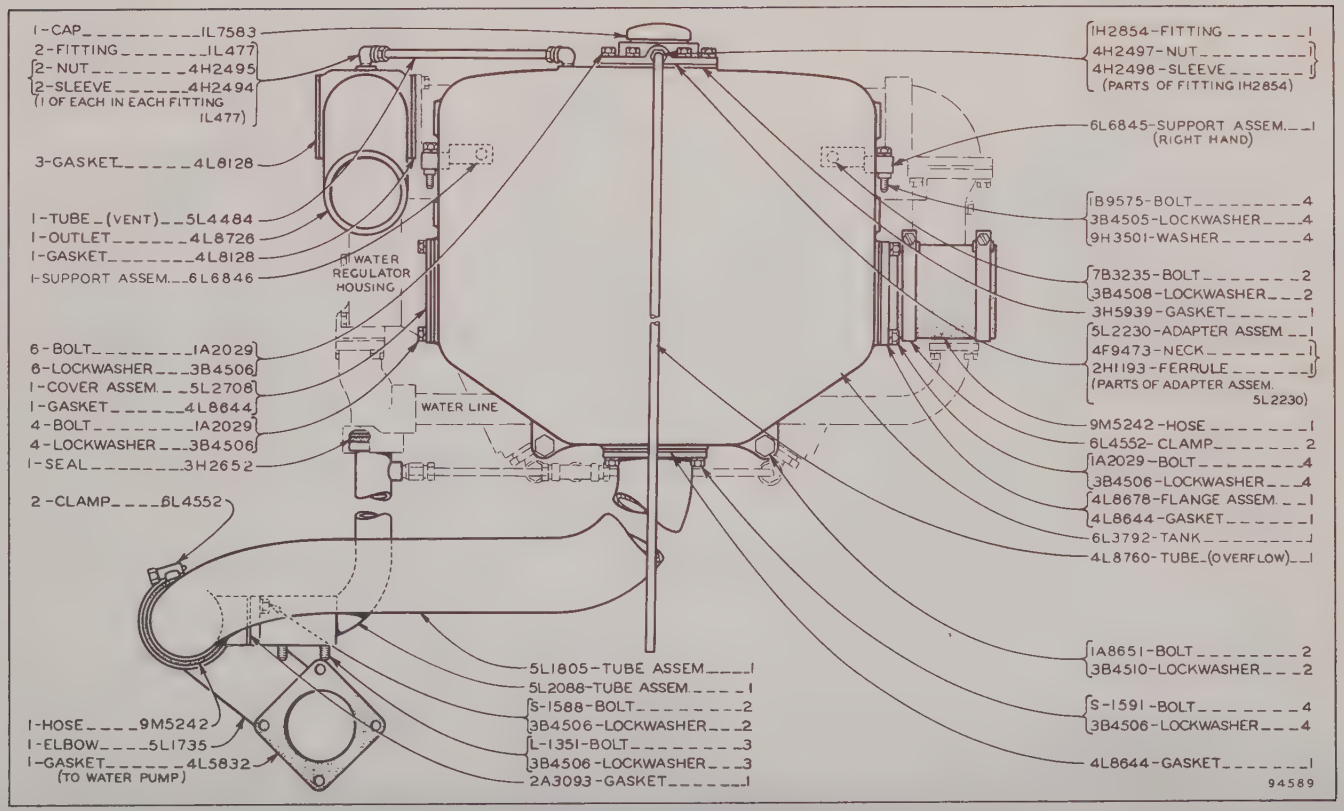

6L9186 EXPANSION TANK AND WATER LINES GROUP
Effective with Serial No. 76B1

6L9186 EXPANSION TANK AND WATER LINES GROUP--TYPE 2
EFFECTIVE WITH SERIAL No. 76B1

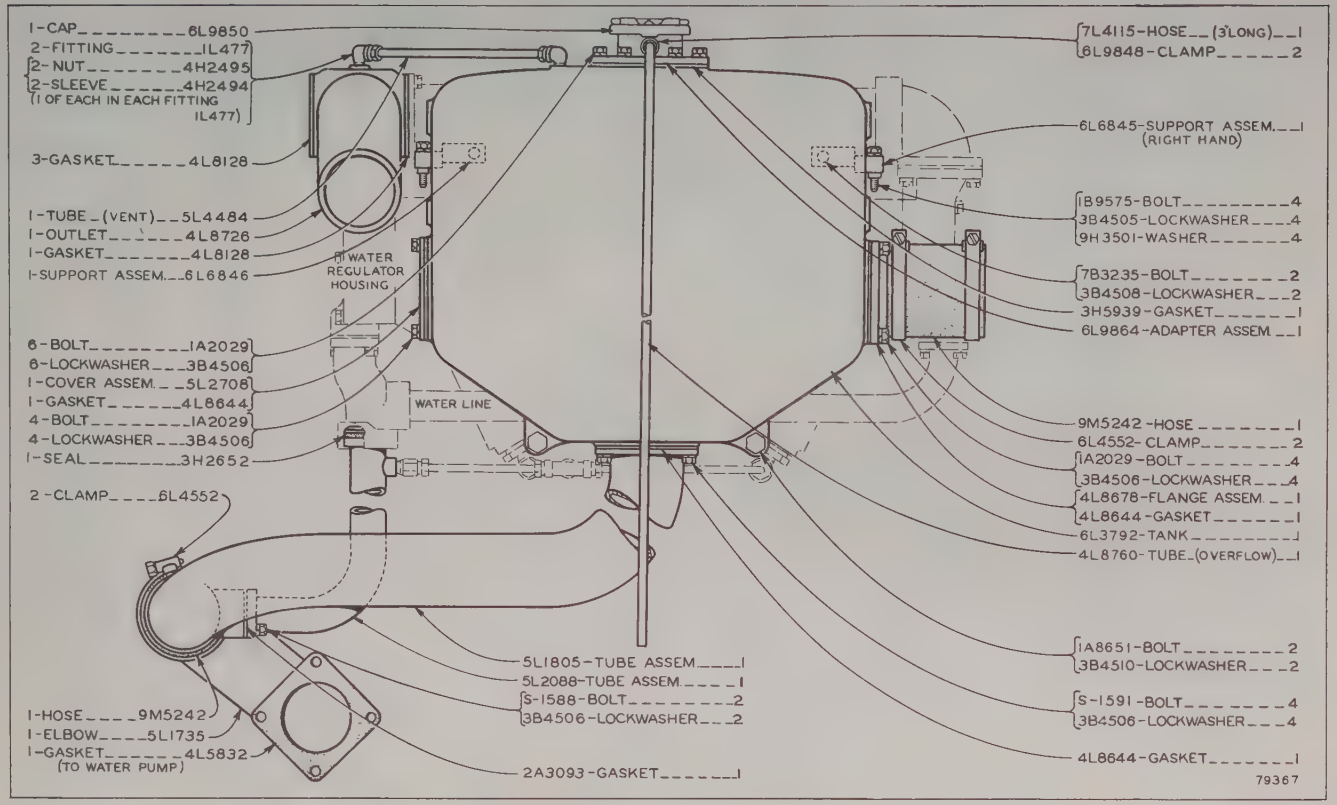

6L4754 RAW WATER PUMP GROUP—First Type

Effective with Serial No. 68B675

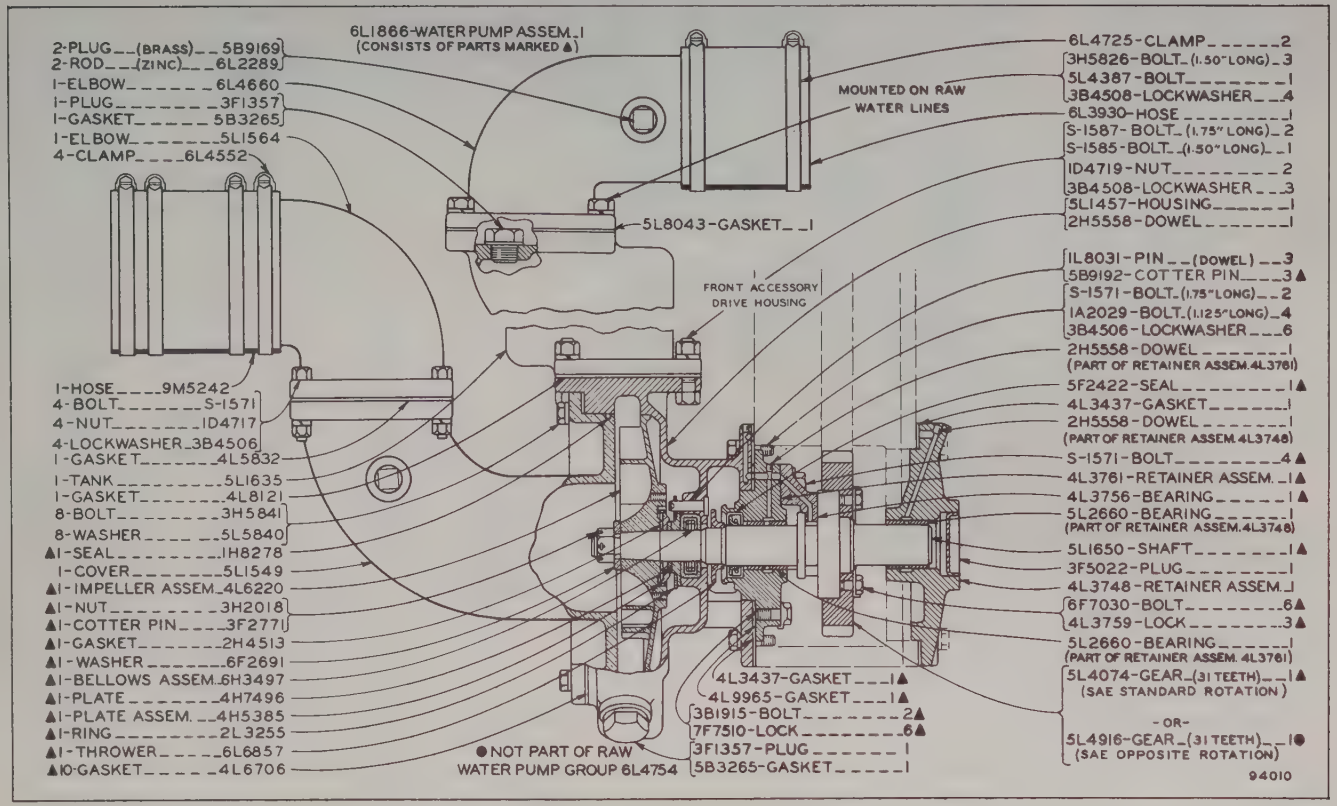

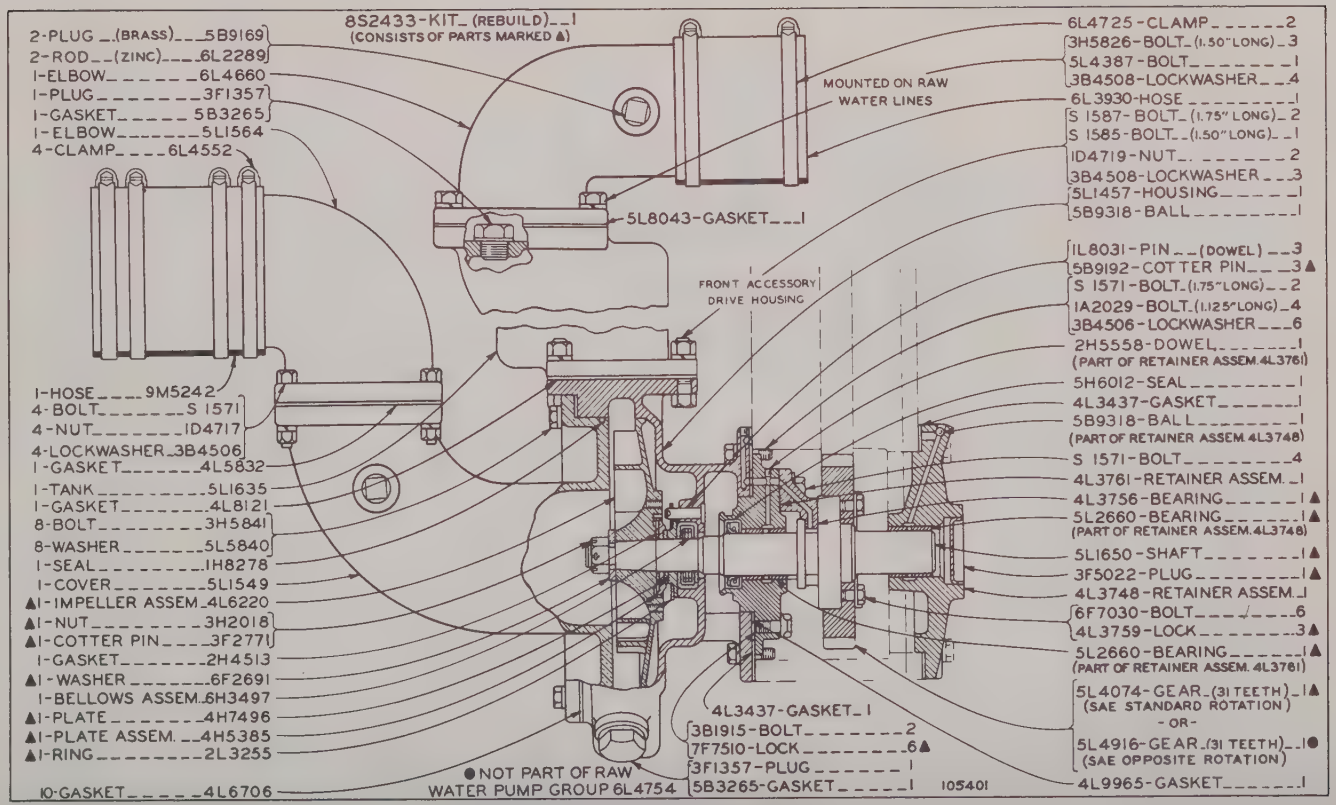

6L4754 RAW WATER PUMP GROUP—Second Type
Effective with Serial No. 68B675

6L8995 RAW WATER LINES GROUP
EFFECTIVE WITH SERIAL No. 68B1064

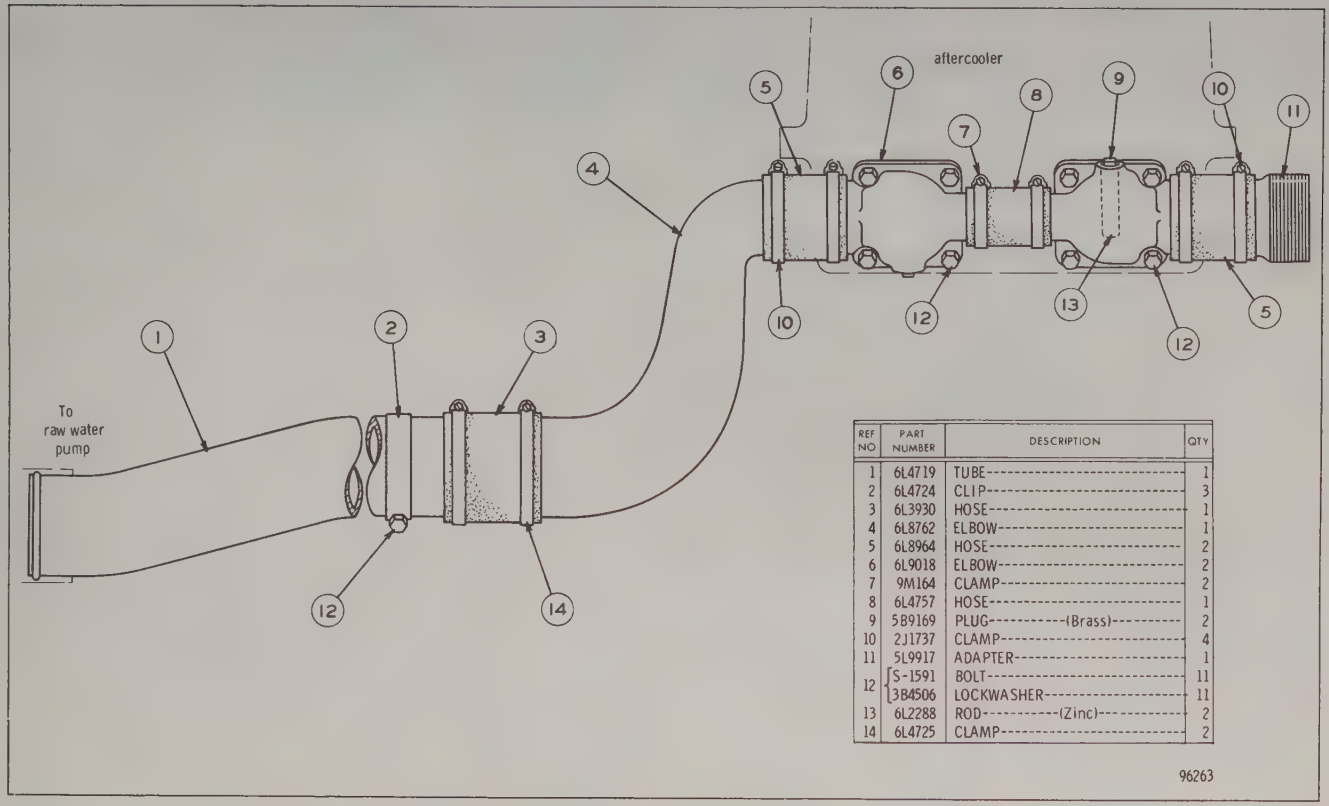

REF NO	PART NUMBER	DESCRIPTION	QTY
1	6L4719	TUBE	1
2	6L4724	CLIP	3
3	6L3930	HOSE	1
4	6L8762	ELBOW	1
5	6L8964	HOSE	2
6	6L9018	ELBOW	2
7	9M164	CLAMP	2
8	6L4757	HOSE	1
9	5B9169	PLUG (Brass)	2
10	2J1737	CLAMP	4
11	5L9917	ADAPTER	1
12	S-1591	BOLT	11
	3B4506	LOCKWASHER	11
13	6L2288	ROD (Zinc)	2
14	6L4725	CLAMP	2

96263

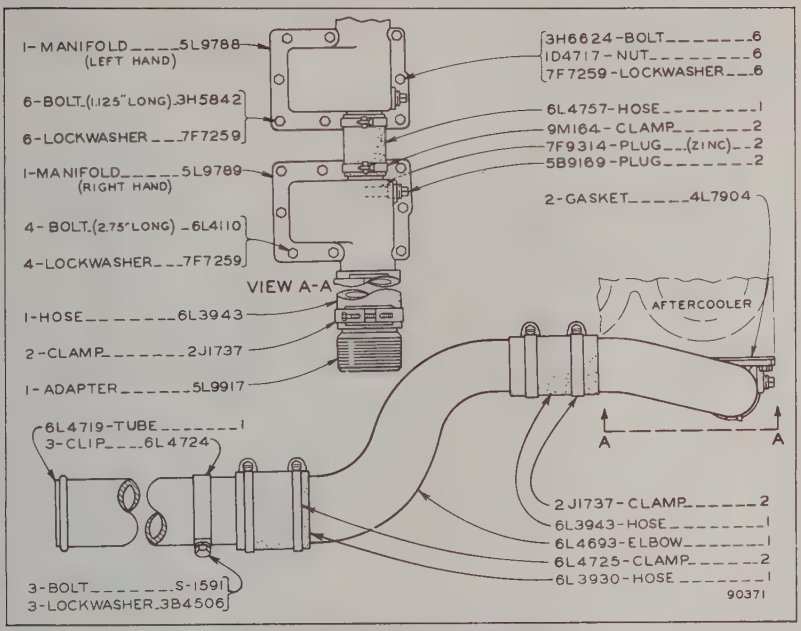

6L4770 RAW WATER LINES GROUP
SERIAL No. 68B675 TO 68B1063 INCLUSIVE

MAXIMUM HORSEPOWER EXCHANGER WILL COOL	EFFECTIVE WITH SERIAL NO. 68B675				EFFECTIVE WITH SERIAL NO. 7681			
	RAW WATER	INDUSTRIAL WATER			RAW WATER	INDUSTRIAL WATER		
	85°F	85°F	100°F	120°F	85°F	85°F	100°F	120°F
525				5L6504				
625			5L6504					
650								5L6504
700	5L6502	5L6504						
775							5L6504	
850					5L6502	5L6504		

79371

HEAT EXCHANGER CHART

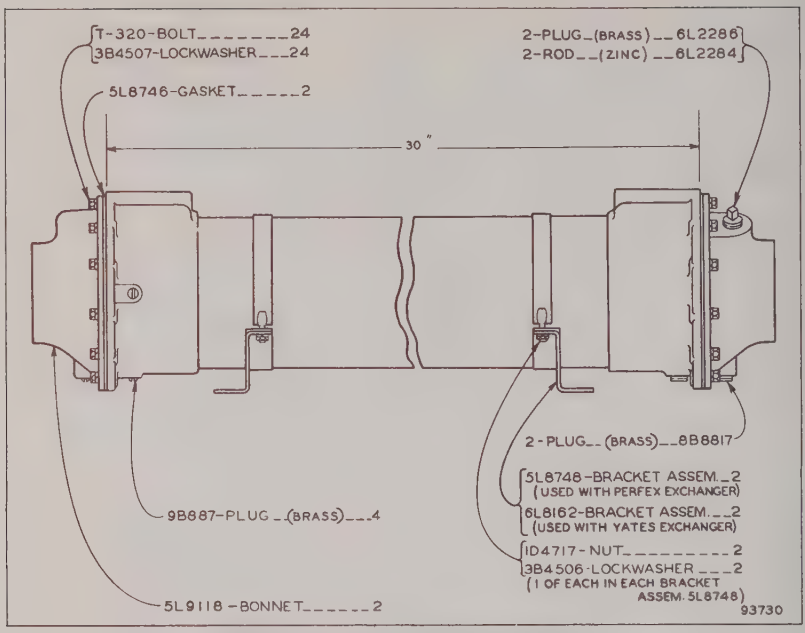

5L6504 HEAT EXCHANGER ASSEMBLY

Only separate parts serviced. When complete Assembly is required order 7L489. Refer to Page 145 for usage

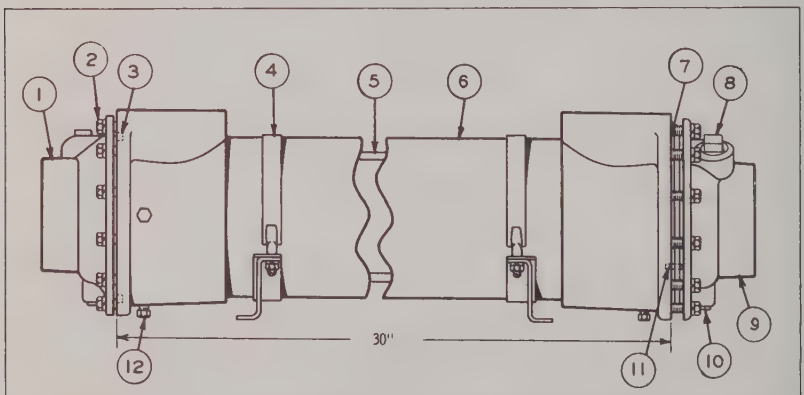

REF. NO.	PART NUMBER	DESCRIPTION	QTY
1	7L484	BONNET	1
2	T768	BOLT	24
	3B4507	LOCKWASHER	24
3	7L486	SEAL	1
4	8L5053	BRACKET ASSEM.	2
5	8L4504	CORE ASSEM. -----(30" long)-----	1
6	8L5119	SHELL ASSEM.	1

REF. NO.	PART NUMBER	DESCRIPTION	QTY
7	7L487	GASKET	2
8	6L2286	PLUG----------(Brass)----------	2
	6L2284	ROD----------(Zinc)----------	2
9	7L485	BONNET	1
10	8B8817	PLUG----------(Brass)----------	2
11	1H1200	PIN	1
12	9B887	PLUG----------(Brass)----------	4

123869

7L489 HEAT EXCHANGER ASSEMBLY

Provides Admiralty Tubing

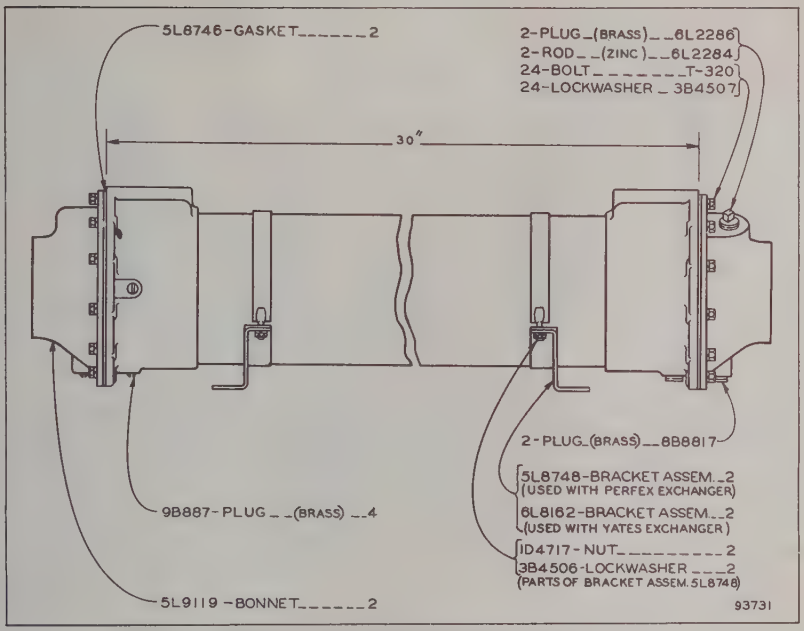

5L6502 HEAT EXCHANGER ASSEMBLY

Only separate parts serviced. When complete Assembly is required order 8L5340 shown on Page 146B. Refer to Page 145 for usage

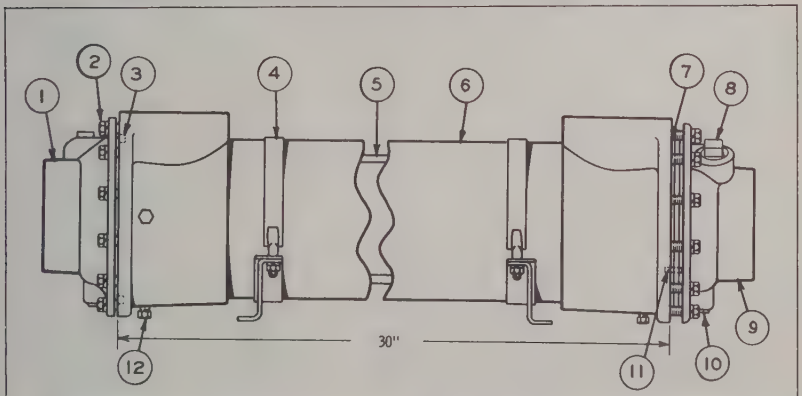

REF. NO.	PART NUMBER	DESCRIPTION	QTY
1	7L482	BONNET	1
2	T768	BOLT	24
	3B4507	LOCKWASHER	24
3	7L486	SEAL	1
4	8L5053	BRACKET ASSEM.	2
5	8L4503	CORE ASSEM. (30" long)	1
6	8L5119	SHELL ASSEM.	1

REF. NO.	PART NUMBER	DESCRIPTION	QTY
7	7L487	GASKET	2
8	6L2286	PLUG-----(Brass)	2
	6L2284	ROD-----(Zinc)	2
9	7L483	BONNET	1
10	8B8817	PLUG-----(Brass)	2
11	1H1200	PIN	1
12	9B887	PLUG-----(Brass)	4

123868

7L488 HEAT EXCHANGER ASSEMBLY

Provides copper-nickel tubing. Only separate parts serviced. When complete Assembly is required order 8L5340 shown on Page 146B

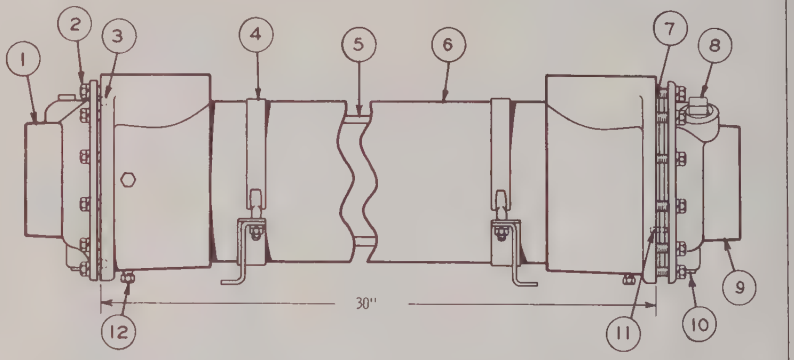

REF. NO.	PART NUMBER	DESCRIPTION	QTY
1	7L482	BONNET	1
2	T768	BOLT	24
	3B4507	LOCKWASHER	24
3	7L486	SEAL	1
4	8L5053	BRACKET ASSEM.	2
5	8L5341	CORE ASSEM. (30" long)	1
6	8L5119	SHELL ASSEM.	1

REF. NO.	PART NUMBER	DESCRIPTION	QTY
7	7L487	GASKET	2
8	6L2286	PLUG (Brass)	2
	6L2284	ROD (Zinc)	2
9	7L483	BONNET	1
10	8B8817	PLUG (Brass)	2
11	1H1200	PIN	1
12	9B887	PLUG (Brass)	4

123871

8L5340 HEAT EXCHANGER ASSEMBLY
Provides copper-nickel tubing

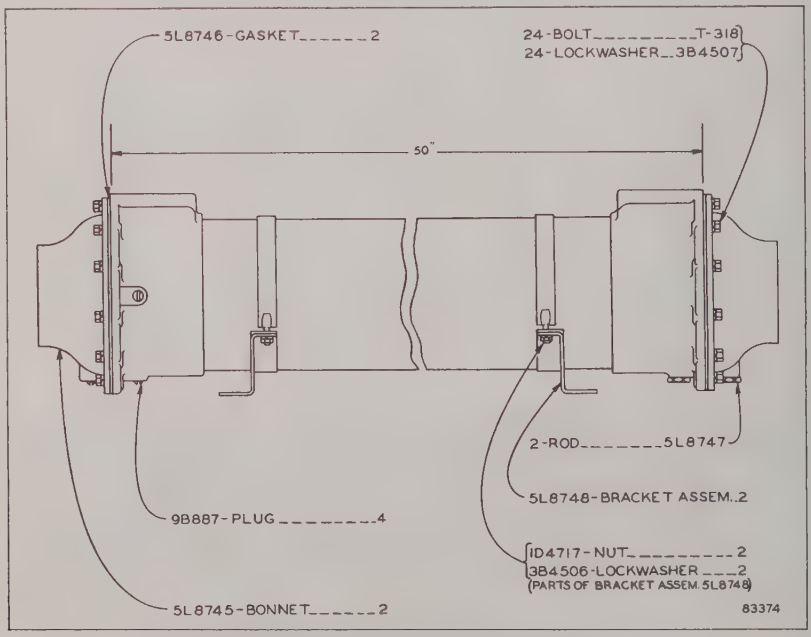

5L6503 HEAT EXCHANGER ASSEMBLY—Type 1
Provides copper-nickel tubing. Only separate parts serviced
When complete Assembly is required order 8L5342 shown on Page 146D

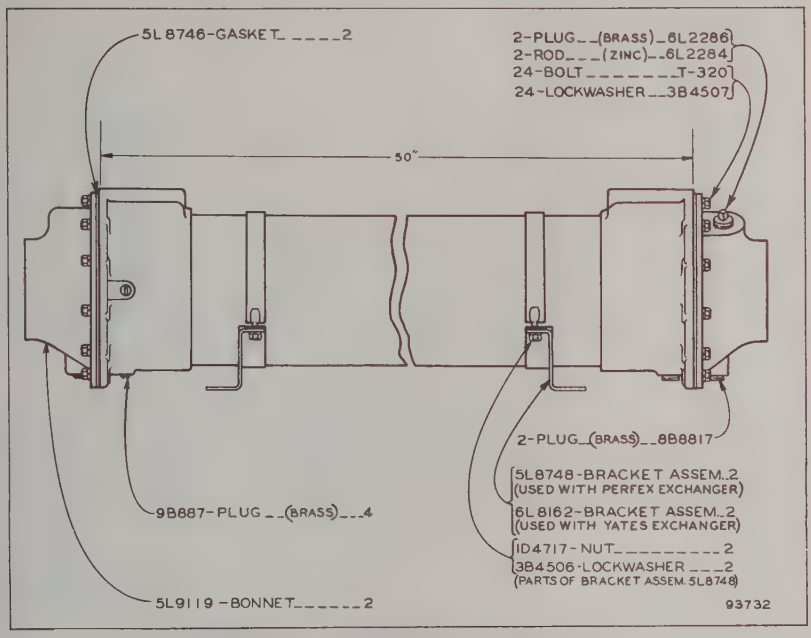

5L6503 HEAT EXCHANGER ASSEMBLY—Type 2
Provides copper-nickel tubing. Only separate parts serviced
When complete Assembly is required order 8L5342 shown on Page 146D

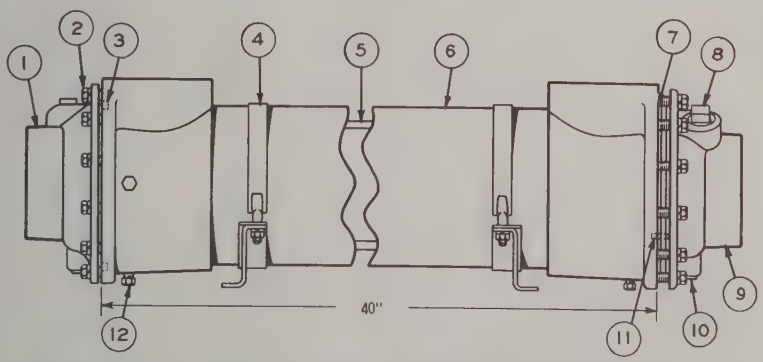

REF. NO.	PART NUMBER	DESCRIPTION	QTY
1	7L482	BONNET	1
2	T768	BOLT	24
	3B4507	LOCKWASHER	24
3	7L486	SEAL	1
4	8L5053	BRACKET ASSEM.	2
5	8L4505	CORE ASSEM.	1
6	8L5120	SHELL ASSEM.	1

REF. NO.	PART NUMBER	DESCRIPTION	QTY
7	7L487	GASKET	2
8	6L2286	PLUG-----(Brass)-----	2
	6L2284	ROD-----(Zinc)-----	2
9	7L483	BONNET	1
10	8B8817	PLUG-----(Brass)-----	2
11	1H1200	PIN	1
12	9B887	PLUG-----(Brass)-----	4

123867

7L490 HEAT EXCHANGER ASSEMBLY
Provides copper-nickel tubing. Only separate parts serviced
When complete Assembly is required order 8L5342 shown on Page 146D

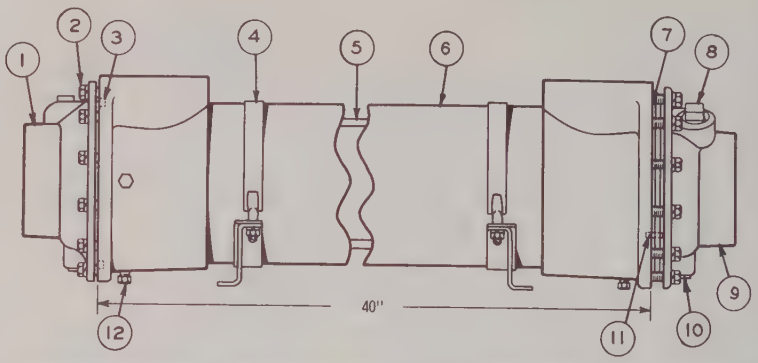

REF. NO.	PART NUMBER	DESCRIPTION	QTY
1	7L482	BONNET	1
2	T768	BOLT	24
	3B4507	LOCKWASHER	24
3	7L486	SEAL	1
4	8L5053	BRACKET ASSEM.	2
5	8L5343	CORE ASSEM. (40" long)	1
6	8L5120	SHELL ASSEM.	1

REF. NO.	PART NUMBER	DESCRIPTION	QTY
7	7L487	GASKET	2
8	6L2286	PLUG (Brass)	2
	6L2284	ROD (Zinc)	2
9	7L483	BONNET	1
10	8B8817	PLUG (Brass)	2
11	1H1200	PIN	1
12	9B887	PLUG (Brass)	4

123872

8L5342 HEAT EXCHANGER ASSEMBLY
Provides copper-nickel tubing

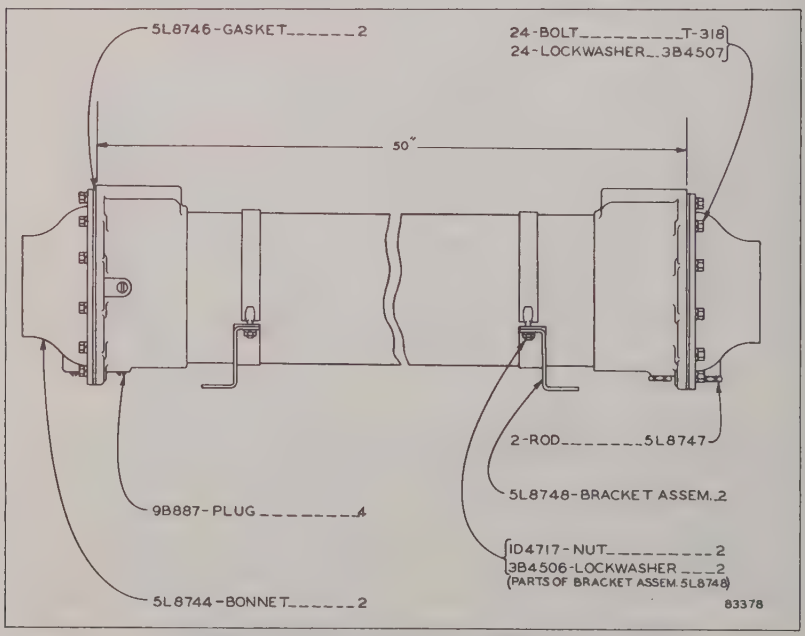

5L6505 HEAT EXCHANGER ASSEMBLY—Type 1
Provides Admiralty tubing. Only separate parts serviced
When complete Assembly is required order 7L491

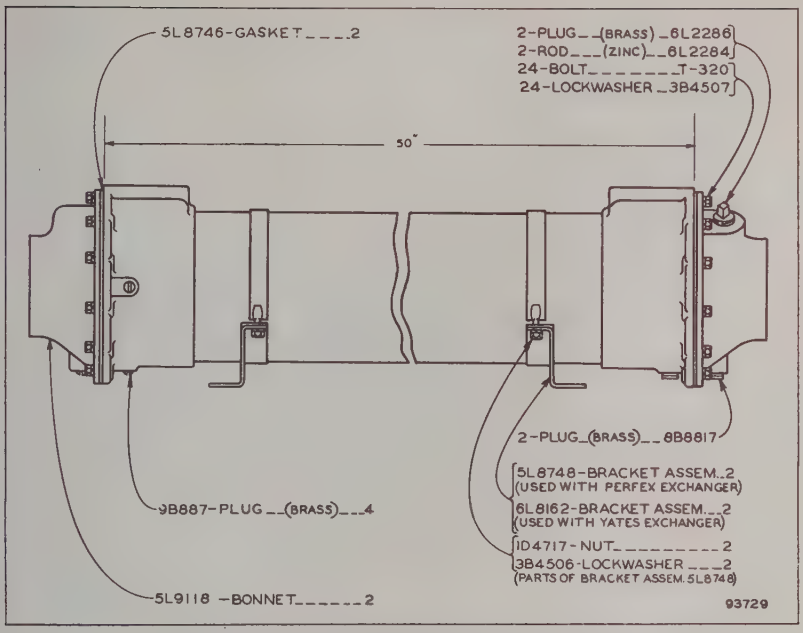

5L6505 HEAT EXCHANGER ASSEMBLY—Type 2
Provides Admiralty tubing. Only separate parts serviced
When complete Assembly is required order 7L491

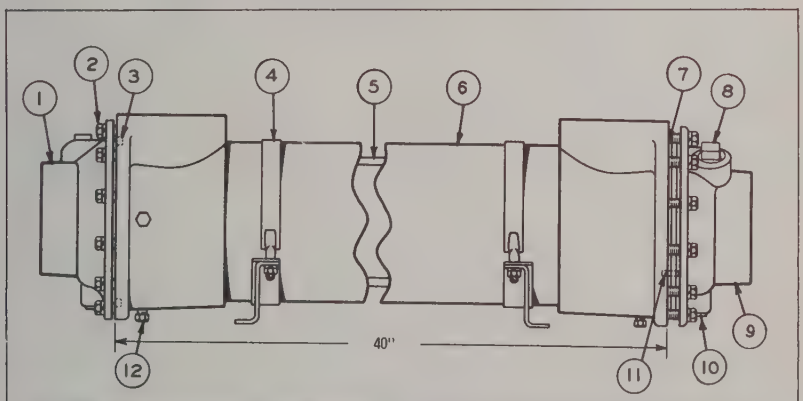

REF. NO.	PART NUMBER	DESCRIPTION	QTY.
1	7L484	BONNET	1
2	T768	BOLT	24
	3B4507	LOCKWASHER	24
3	7L486	SEAL	1
4	8L5053	BRACKET ASSEM.	2
5	8L4506	CORE ASSEM. -------(40" long)----	1
6	8L5120	SHELL ASSEM.	1

REF. NO.	PART NUMBER	DESCRIPTION	QTY.
7	7L487	GASKET	2
8	6L2286	PLUG----------(Brass)----------	2
	6L2284	ROD----------(Zinc)----------	2
9	7L485	BONNET	1
10	8B8817	PLUG----------(Brass)----------	2
11	1H1200	PIN	1
12	9B887	PLUG----------(Brass)----------	4

123870

7L491 HEAT EXCHANGER ASSEMBLY
Provides Admiralty tubing

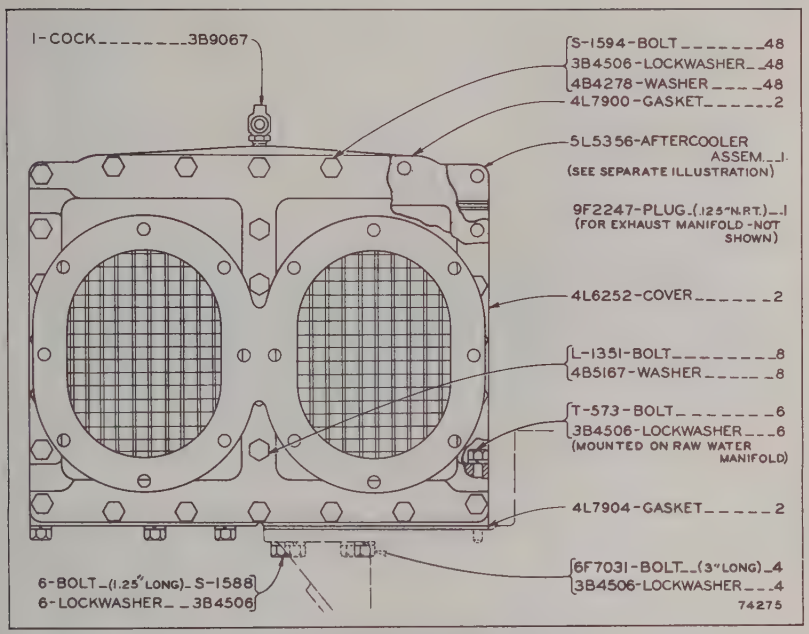

5L6795 AFTERCOOLER GROUP—Raw Water
Serial No. 68B675 to 68B1063 inclusive

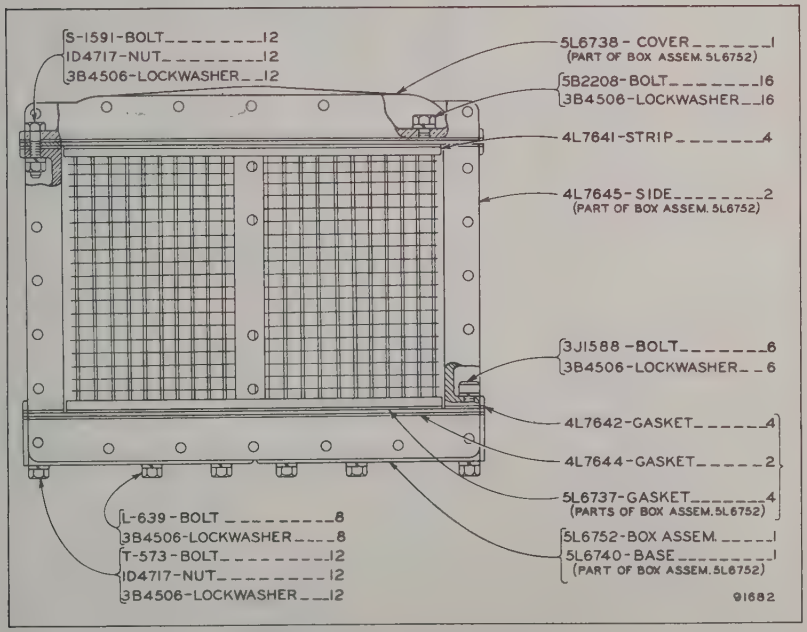

5L5356 AFTERCOOLER ASSEMBLY
Part of 5L6795 Aftercooler Group

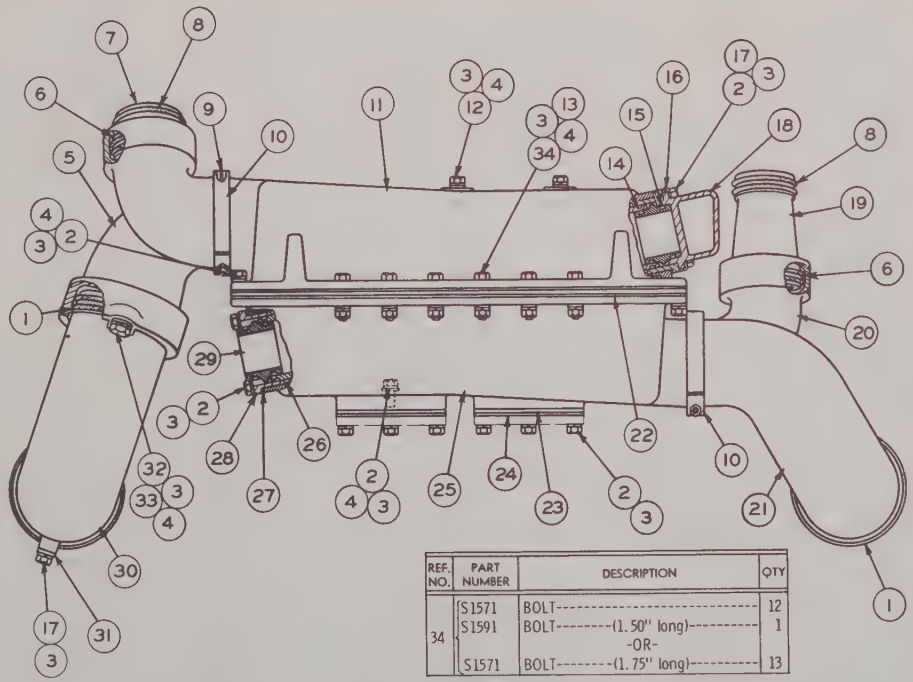

REF NO	PART NUMBER	DESCRIPTION	QTY
1	5H6733	SEAL	6
2	S 1591	BOLT--------(1.50" Long)	37
3	3B4506	LOCKWASHER	60
4	4B4278	WASHER	32
5	6L6482	ELBOW	1
6	6L8166	SEAL	4
7	6L6484	PIPE	1
8	6L8167	SEAL	4
9	6L6487	GASKET	4
10	5L7631	CLAMP	4
11	6L6293	HOUSING	1
12	4F411	BOLT	3
13	1D4717	NUT	12
14	9F4446	SEAL	4
15	2H2665	SEAL	8
16	6L8751	CLIP	4
17	S 1594	BOLT--------(1.00" Long)	6
18	6L8764	PIPE	1
19	6L6483	PIPE	1
20	6L6481	ELBOW	2
21	6L6485	ELBOW	1
22	2N5693	GASKET	2
23	6L6494	PLATE	2
24	4L7904	GASKET	2
25	6L6294	HOUSING	1
26	1N5566	CORE ASSEM.	1
	1N5565	CORE ASSEM.	1
27	6L6489	GASKET	4
28	6L6488	FLANGE	4
29	6L8761	SLEEVE	4
30	6L6486	ELBOW	1
31	6L6493	LOCK	1
32	1A2029	BOLT	1
33	1S6908	PLATE	1

REF. NO.	PART NUMBER	DESCRIPTION	QTY
34	S1571	BOLT	12
	S1591	BOLT--------(1.50" long)	1
		-OR-	
	S1571	BOLT--------(1.75" long)	13

111247

6L6394 AFTERCOOLER GROUP—Sea Water—Type 1
Serial No. 68B1064—Up

6L6394 AFTERCOOLER GROUP—Sea Water—Type 2
Serial No. 68B1064—Up

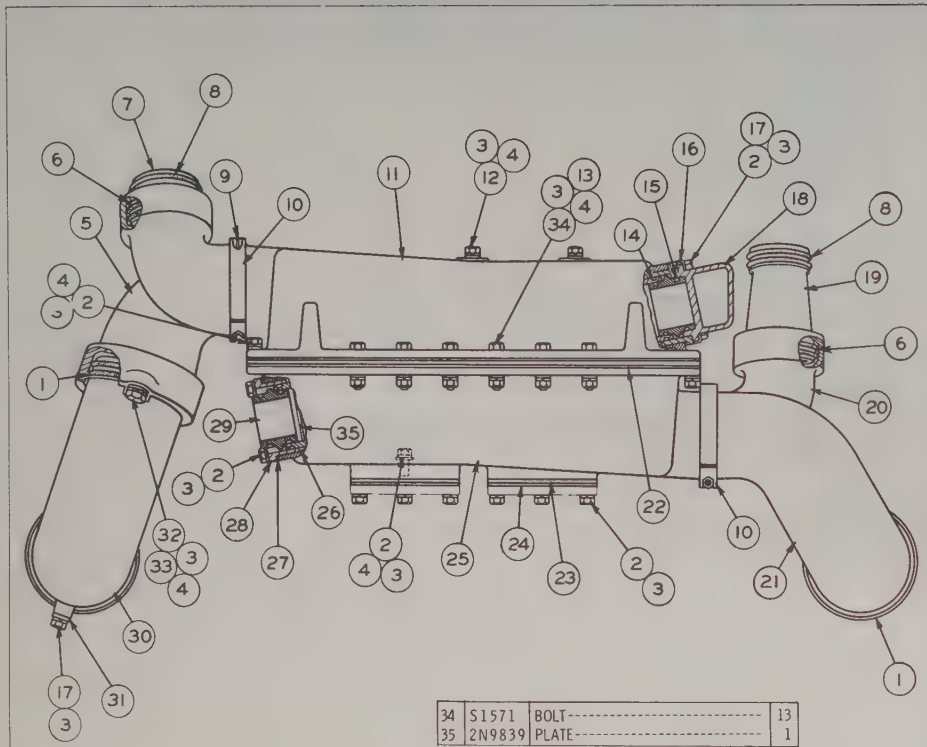

REF. NO.	PART NUMBER	DESCRIPTION	QTY.
1	5H6733	SEAL	6
2	S 1591	BOLT—(1.50" Long)	37
3	3B4506	LOCKWASHER	60
4	4B4278	WASHER	32
5	6L6482	ELBOW	1
6	6L8166	SEAL	4
7	6L6484	PIPE	1
8	6L8167	SEAL	4
9	6L6487	GASKET	4
10	5L7631	CLAMP	4
11	6L6293	HOUSING	1
12	4F411	BOLT	3
13	1D4717	NUT	12
14	9F4446	SEAL	4
15	2H2665	SEAL	8
16	6L8751	CLIP	4
17	S 1594	BOLT—(1.00" Long)	6
18	6L8764	PIPE	1
19	6L6483	PIPE	1
20	6L6481	ELBOW	2
21	6L6485	ELBOW	1
22	2N5693	GASKET	2
23	6L6494	PLATE	2
24	4L7904	GASKET	2
25	6L6294	HOUSING	1
26	1N5566	CORE ASSEM.	1
	2N9840	CORE ASSEM.	1
27	6L6489	GASKET	4
28	6L6488	FLANGE	4
29	6L8761	SLEEVE	4
30	6L6486	ELBOW	1
31	6L6493	LOCK	1
32	1A2029	BOLT	1
33	1S6908	PLATE	1
34	S1571	BOLT	13
35	2N9839	PLATE	1

135153

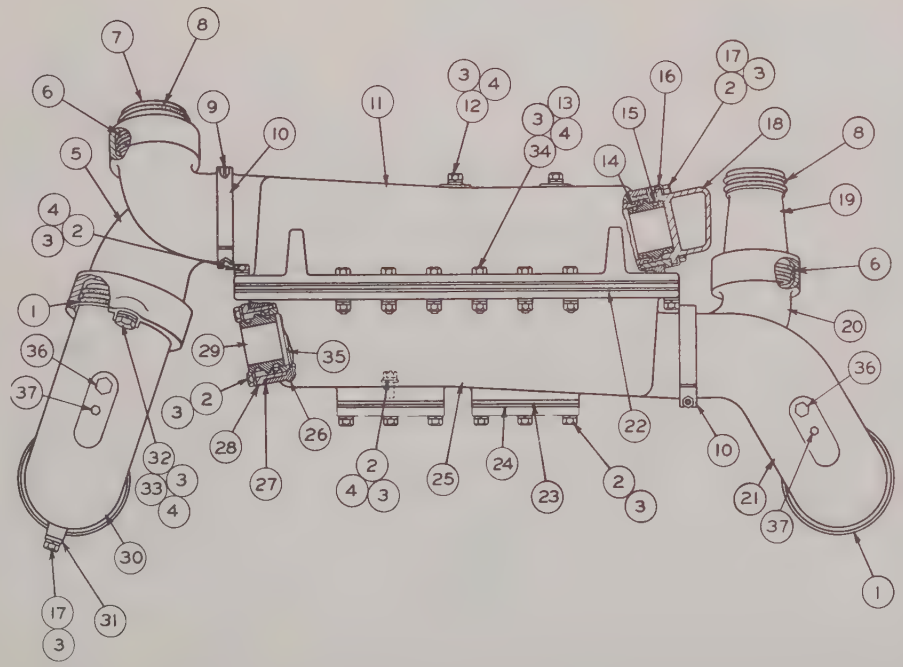

REF. NO.	PART NUMBER	DESCRIPTION	QTY
1	5H6733	SEAL	6
2	S1591	BOLT (1.50" long)	37
3	3B4506	LOCKWASHER	60
4	4B4278	WASHER	32
5	6L6482	ELBOW	1
6	6L8166	SEAL	4
7	6L6484	PIPE	1
8	6L8167	SEAL	4
9	6L6487	GASKET	4
10	5L7631	CLAMP	4
11	6L6293	HOUSING	1
12	4F411	BOLT	3
13	1D4717	NUT	12
14	9F4446	SEAL	4
15	2H2665	SEAL	8
16	6L8751	CLIP	4
17	S1594	BOLT (1.00" long)	6
18	6L8764	PIPE	1
19	6L6483	PIPE	1
20	6L6481	ELBOW	2
C 21	3N3432	ELBOW	1
22	2N5693	GASKET	2
23	6L6494	PLATE	2
24	4L7904	GASKET	2
25	6L6294	HOUSING	1
C 26	3N4363	CORE ASSEM.	1
C 26	3N4364	CORE ASSEM.	1
27	6L6489	GASKET	4
28	6L6488	FLANGE	4
29	6L8761	SLEEVE	4
C 30	3N3433	ELBOW	1
31	6L6493	LOCK	1
32	1A2029	BOLT	1
33	1S6908	PLATE	1
34	S1571	BOLT	13
35	2N9839	PLATE	1
C 36	3J5389	PLUG	2
C 37	5M6214	PLUG	2

C INDICATES CHANGE

114763

6L6394 AFTERCOOLER GROUP—Sea Water—Type 3
Serial No. 68B1064—Up

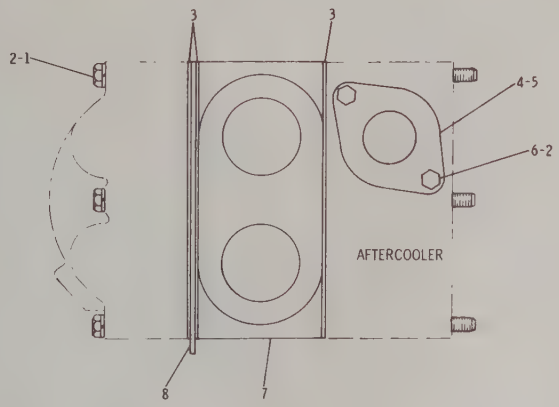

REF. NO.	PART NUMBER	DESCRIPTION	QTY
1	7L7524	BOLT	6
2	3B4506	LOCKWASHER	8
3	4L6216	GASKET	3
4	7L7055	PLATE	1
5	8M2331	GASKET	2
6	1A2029	BOLT	2
7	5L6650	HOUSING	1
8	7L7056	PLATE	1

156582

3N9623 TORQUE CONVERTER COOLER CONNECTIONS GROUP—100 GPM Capacity
Serial No. 68B1064—Up
FOR USE WITH JACKET WATER AFTERCOOLERS

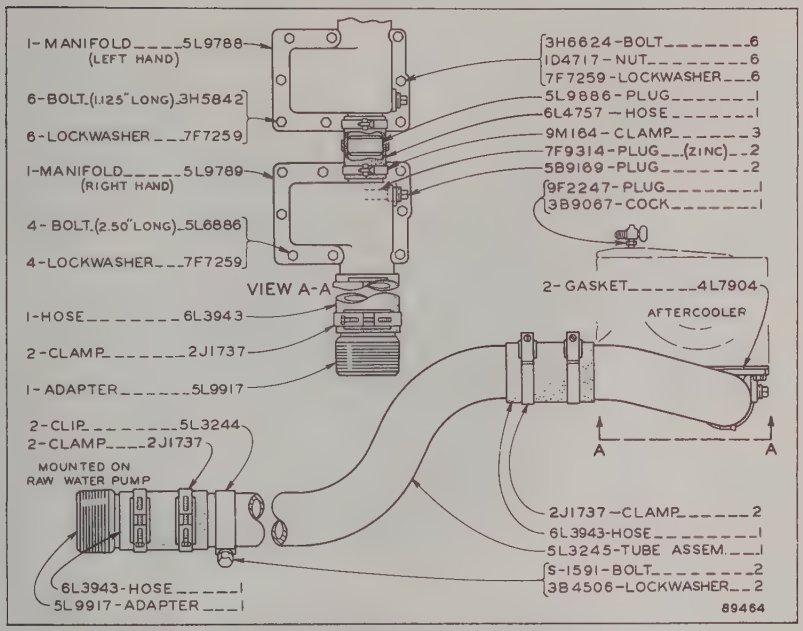

5L9945 AFTERCOOLER CONNECTIONS GROUP--FULL FLOW
SERIAL No. 68B675 TO 68B1063 INCLUSIVE
FOR USE WITH 5L6795 AFTERCOOLER GROUP SHOWN ON PAGE 147

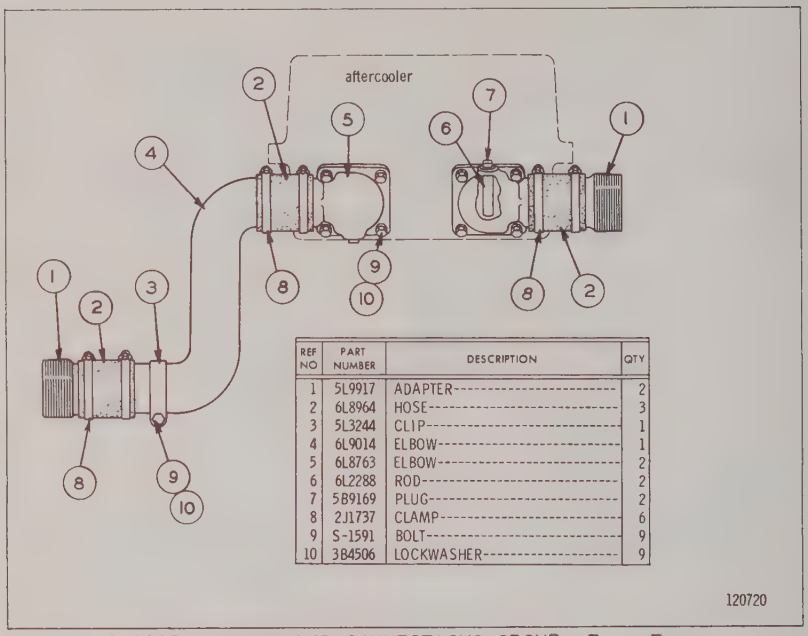

REF NO	PART NUMBER	DESCRIPTION	QTY
1	5L9917	ADAPTER	2
2	6L8964	HOSE	3
3	5L3244	CLIP	1
4	6L9014	ELBOW	1
5	6L8763	ELBOW	2
6	6L2288	ROD	2
7	5B9169	PLUG	2
8	2J1737	CLAMP	6
9	S-1591	BOLT	9
10	3B4506	LOCKWASHER	9

6L9016 AFTERCOOLER CONNECTIONS GROUP--FULL FLOW
EFFECTIVE WITH SERIAL No. 68B1064
FOR USE WITH 6L6394 AFTERCOOLER GROUP SHOWN ON PAGE 147A

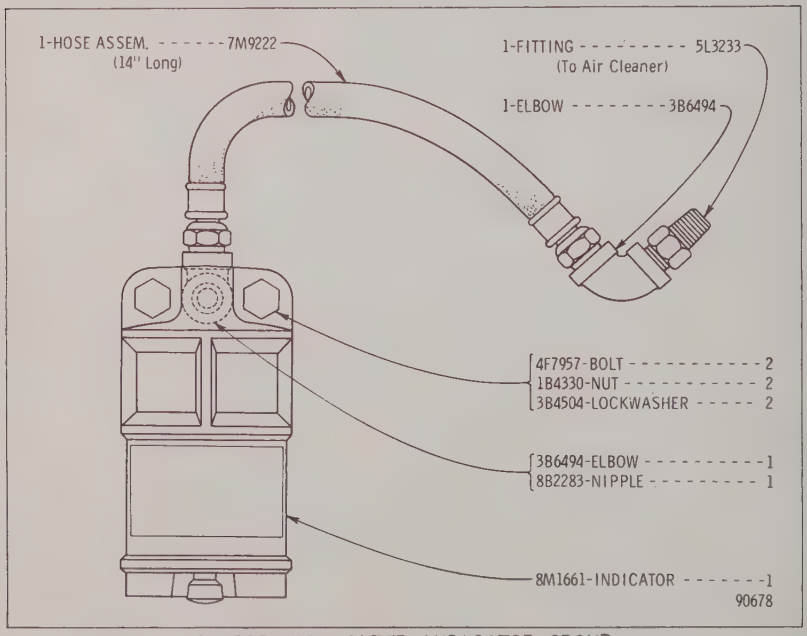

6L5833 AIR FILTER INDICATOR GROUP
SERIAL No. 68B675 TO 68B1063 INCLUSIVE & 76B1 TO 76B144 INCLUSIVE
FOR USE WITH PANEL TYPE AIR CLEANERS

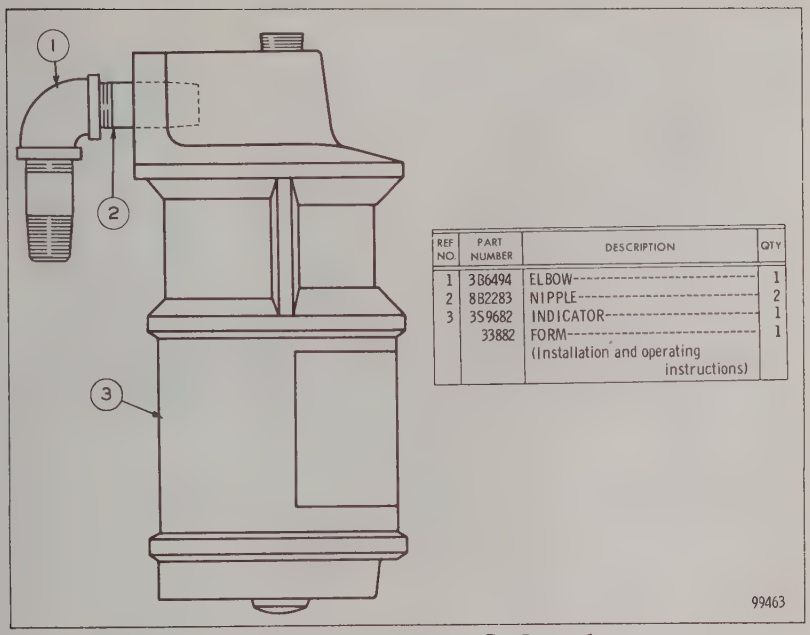

REF NO.	PART NUMBER	DESCRIPTION	QTY
1	3B6494	ELBOW	1
2	8B2283	NIPPLE	2
3	3S9682	INDICATOR	1
	33882	FORM (Installation and operating instructions)	1

7L3225 INDICATOR GROUP--TYPE 1
EFFECTIVE WITH SERIAL No. 68B1064-UP AND 76B145-UP
FOR USE WITH PANEL, DRY TYPE AIR CLEANER

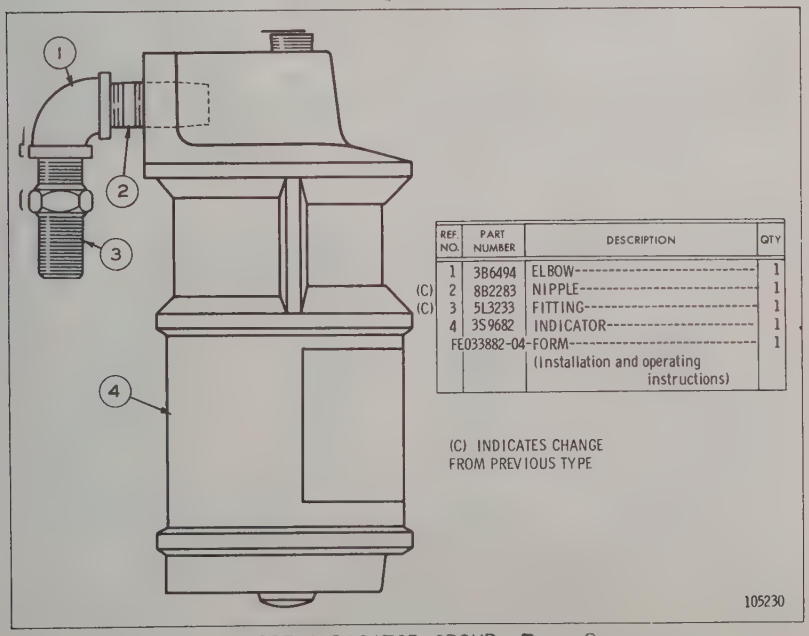

REF NO.	PART NUMBER	DESCRIPTION	QTY
1	3B6494	ELBOW	1
(C) 2	8B2283	NIPPLE	1
(C) 3	5L3233	FITTING	1
4	3S9682	INDICATOR	1
	FE033882-04	FORM (Installation and operating instructions)	1

(C) INDICATES CHANGE FROM PREVIOUS TYPE

7L3225 INDICATOR GROUP--TYPE 2
EFFECTIVE WITH SERIAL No. 68B1064-UP AND 76B145-UP
FOR USE WITH PANEL, DRY TYPE AIR CLEANER

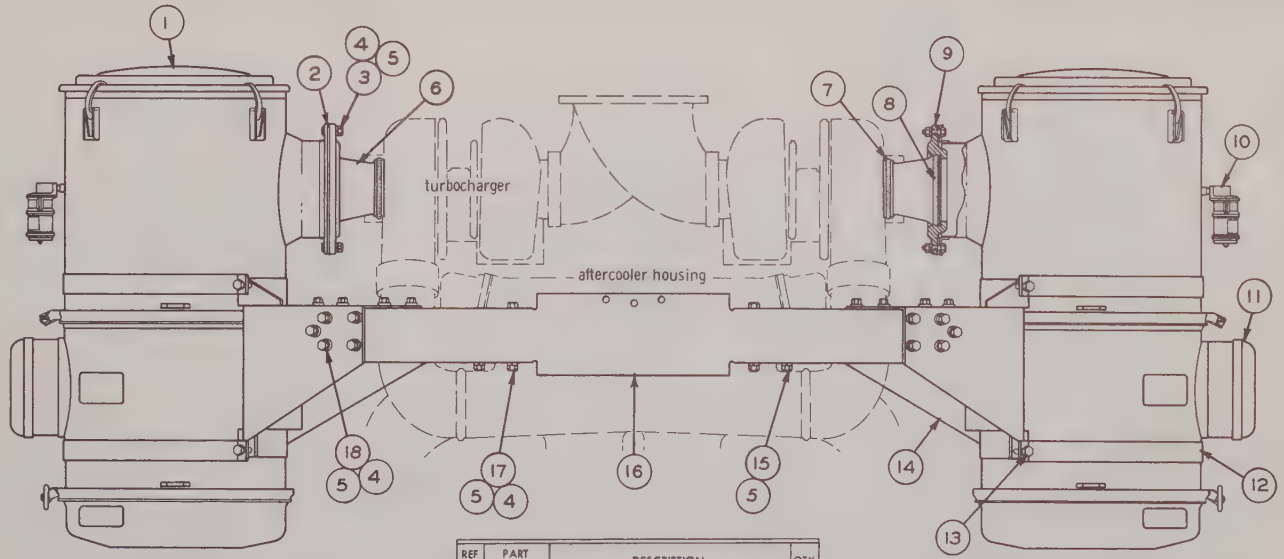

REF. NO.	PART NUMBER	DESCRIPTION	QTY
1	6L2610	AIR CLEANER ASSEM. (See Separate Illustration)	2
2	7L2032	GASKET	2
3	S-1588	BOLT	12
4	1D4717	NUT	44
5	3B4506	LOCKWASHER	48
6	5L5344	COUPLING	2

REF NO.	PART NUMBER	DESCRIPTION	QTY
7	5H7704	SEAL	2
8	7L2031	SEAL	2
9	7L2033	ADAPTER	2
10	3S9682	INDICATOR	2
11	6L4777	SCREEN	2
12	7L2034	BAND	4
13	1B2790	BOLT	8
	1D4716	NUT	8
	3B4505	LOCKWASHER	8

REF NO	PART NUMBER	DESCRIPTION	QTY
14	7L2039	BRACKET ASSEM.	2
15	S-1571	BOLT	4
16	7L2040	CHANNEL-(Rear)	1
	6L9438	CHANNEL-(Front)	1
17	1A5964	BOLT	4
18	L-1351	BOLT	28
	4B4278	WASHER	28

121917

7L2030 AIR CLEANER GROUP--TWO STAGE--HEAVY DUTY--TYPE 1
EFFECTIVE WITH SERIAL NO. 68B1064-UP AND 76B145-UP
6L2610 AIR CLEANER PARTS ARE SHOWN ON PAGE 149

7L2030 AIR CLEANER GROUP--TWO STAGE--HEAVY DUTY--TYPE 2

EFFECTIVE WITH SERIAL No. 68B1064-UP AND 76B145-UP

6L2610 AIR CLEANER PARTS ARE SHOWN ON PAGE 149

(C) INDICATES CHANGE FROM PREVIOUS TYPE

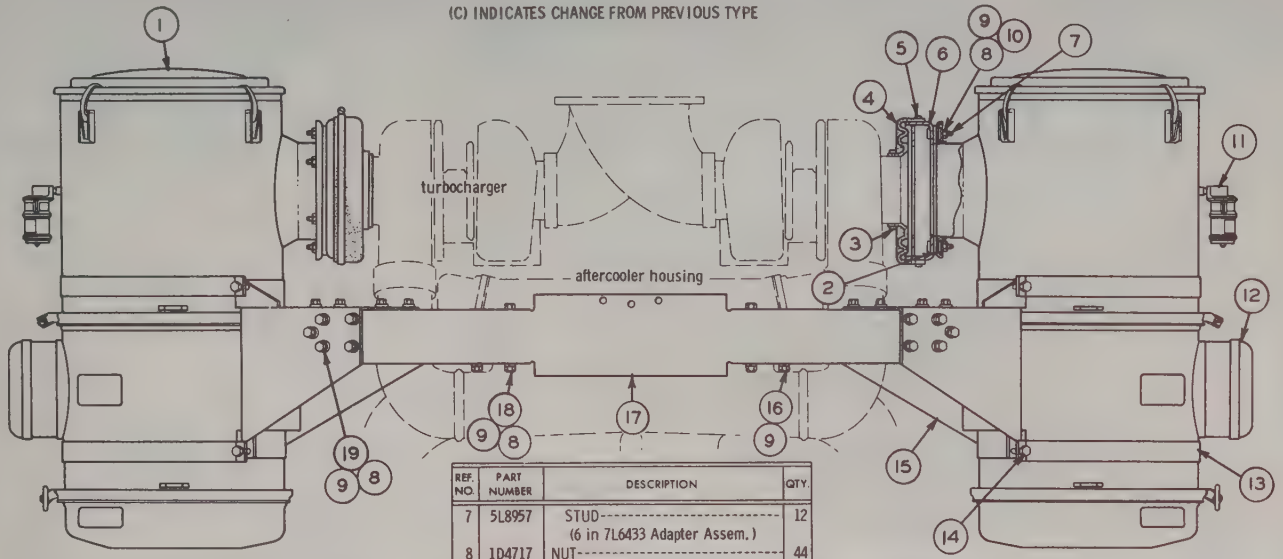

REF NO.	PART NUMBER	DESCRIPTION	QTY.
	1 6L2610	AIR CLEANER ASSEM. (See Separate Illustration)	2
(C)	2 6L2638	GASKET	2
(C)	3 8H5816	CLAMP	2
(C)	4 7L6452	HOSE	2
(C)	5 4J8536	CLAMP	2
(C)	6 7L6433	ADAPTER ASSEM.	2

REF NO.	PART NUMBER	DESCRIPTION	QTY.
	7 5L8957	STUD (6 in 7L6433 Adapter Assem.)	12
	8 1D4717	NUT	44
	9 3B4506	LOCKWASHER	48
	10 T-431	WASHER	12
	5S1212	INDICATOR	2
(C)	11 3B6487	COUPLING	2
(C)	3B7264	NIPPLE	2
	12 6L4477	SCREEN	2
	13 7L2034	BAND	3
	1B2790	BOLT	8
	14 1D4716	NUT	8
	3B4505	LOCKWASHER	8

REF NO	PART NUMBER	DESCRIPTION	QTY
15	7L2039	BRACKET ASSEM.	2
16	S-1571	BOLT	4
17	7L2040	CHANNEL--------(Rear)--------	1
	6L9438	CHANNEL--------(Front)--------	1
18	1A5964	BOLT	4
19	L-1351	BOLT	28
	4B4278	WASHER	28

121918

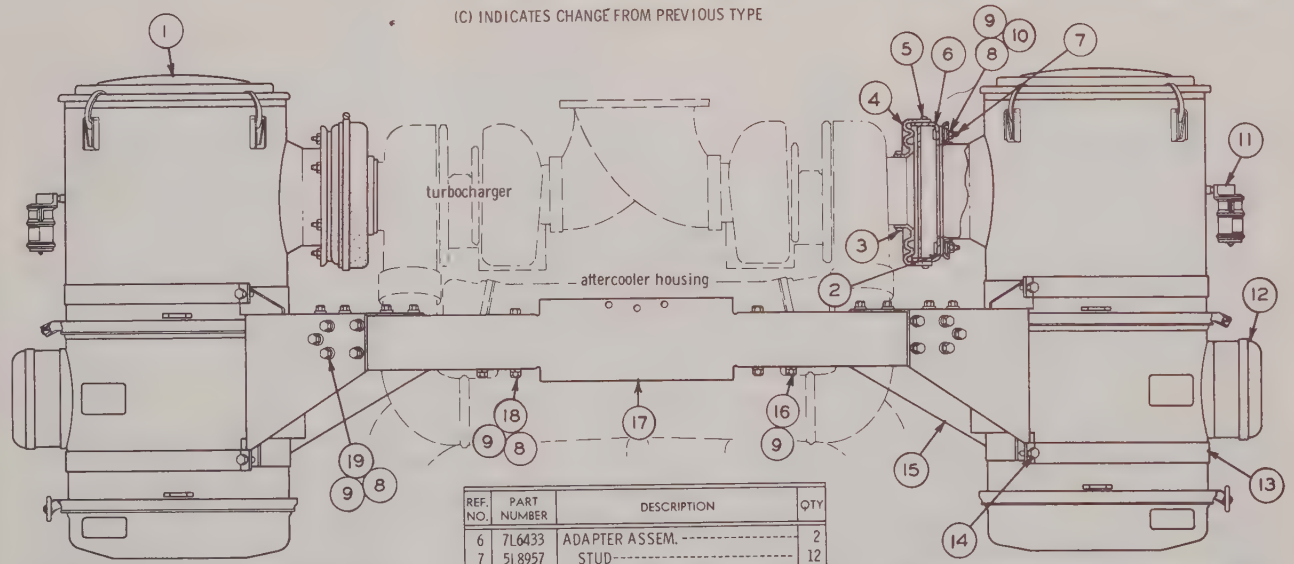

REF NO	PART NUMBER	DESCRIPTION	QTY
1	6L2610	AIR CLEANER ASSEM. (See Separate Illustration)	2
2	6L2638	GASKET	2
3	8H5816	CLAMP	2
(C) 4	7L7728	HOSE	2
5	4J8536	CLAMP	2

REF. NO.	PART NUMBER	DESCRIPTION	QTY
6	7L6433	ADAPTER ASSEM.	2
7	5L8957	STUD (6 in 7L6433 Adapter Assem.)	12
8	1D4717	NUT	44
9	3B4506	LOCKWASHER	48
10	T431	WASHER	12
11	5S1212	INDICATOR	2
12	6L4477	SCREEN	2
13	7L2034	BAND	3
14	1B2790	BOLT	8
	1D4716	NUT	8
	3B4505	LOCKWASHER	8

REF NO	PART NUMBER	DESCRIPTION	QTY
15	7L2039	BRACKET ASSEM.	2
16	S 1571	BOLT	4
17	7L2040	CHANNEL (Rear)	1
	6L9438	CHANNEL (Front)	1
18	1A5964	BOLT	4
19	L 1351	BOLT	28
	4B4278	WASHER	28

105209

7L2030 AIR CLEANER GROUP—Two Stage—Heavy Duty—Type 3
Effective with Serial No. 68B1064-Up and 76B145-Up

3N3741 AIR CLEANER GROUP—Heavy Duty
Serial No. 68B1064—Up
3N3740 Air Cleaner parts are shown on Page 148F

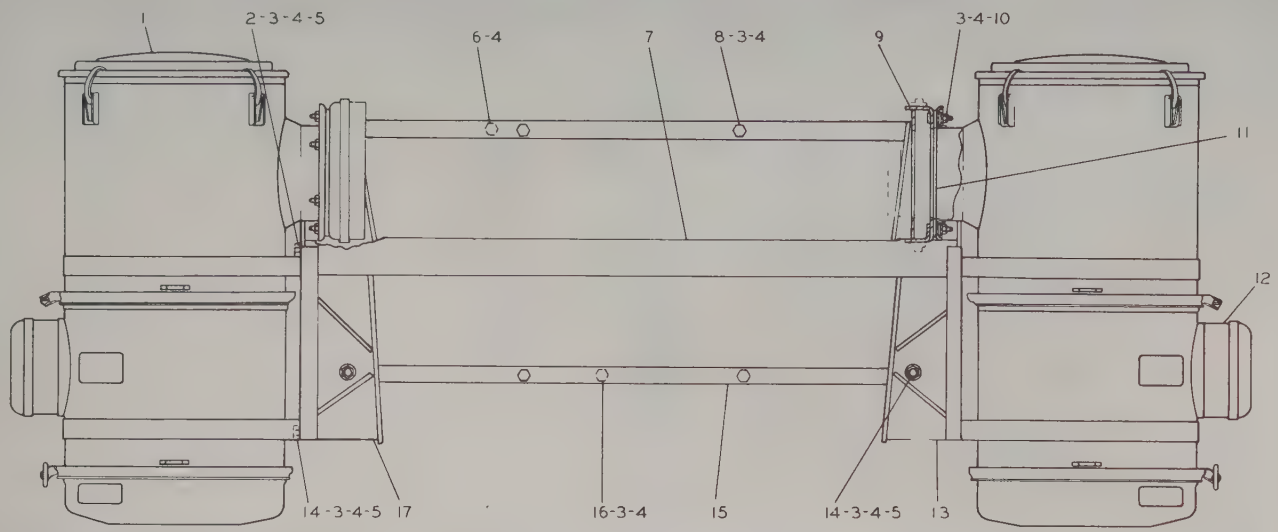

REF. NO	PART NUMBER	DESCRIPTION	QTY
1	3N3740	CLEANER GROUP (Separate Illustration)	2
2	1A2029	BOLT	2
3	1D4717	NUT	44
4	3B4506	LOCKWASHER	48
5	4B4278	WASHER	16
6	S1571	BOLT	4
7	3N2024	BRACE	1
8	1A1583	BOLT	4
9	7L6433	ADAPTER ASSEM.	2
10	T431	WASHER	12
11	6L2638	GASKET	2
12	6L4477	SCREEN	2
13	3N2030	SUPPORT ASSEM.	1
14	S1594	BOLT	14
15	3N2023	CHANNEL	2
16	S1590	BOLT	12
17	3N2027	SUPPORT ASSEM.	1

139191

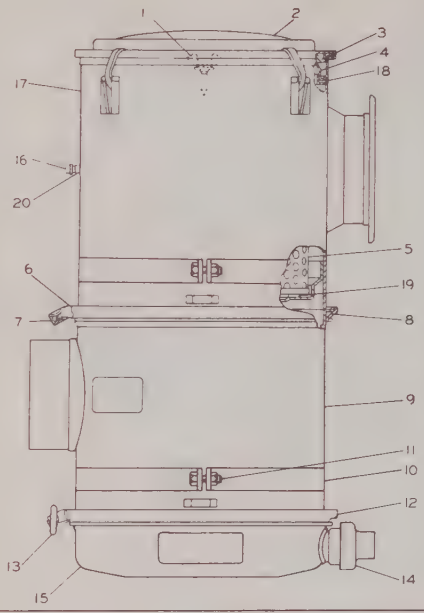

REF NO	PART NUMBER	DESCRIPTION	QTY
1	5L9281	BOLT AND GASKET ASSEM.	1
2	6L3307	COVER ASSEM	1
3	6L3308	GASKET	1
4	6L3309	COVER ASSEM (Inner)	1
	6L3310	GASKET	1
5	6L3313	ELEMENT ASSEM.	1
6	6L3314	CLAMP ASSEM.	1
7	6L3362	SCREW	1
	6L3363	NUT	1
8	5L2692	GASKET	2
9	6L3315	BODY ASSEM.	1
10	6L2641	BAND ASSEM.	2
11	S1591	BOLT	1
	1D4717	NUT	1
12	6L3316	CLAMP ASSEM.	1
13	6L3365	BOLT	1
	6L3364	NUT	1
14	1S5485	VALVE	1
15	1N8167	CUP ASSEM.	1
16	3B7725	CAP	1
17	6L3311	BODY ASSEM.	1
18	6L3312	GASKET	1
19	6L3361	GASKET	1
20	7M1674	ELEMENT	1

139192

3N3740 AIR CLEANER GROUP
Serial No. 68B1064—Up
Part of 3N3741 Air Cleaner Group shown on Page 148E

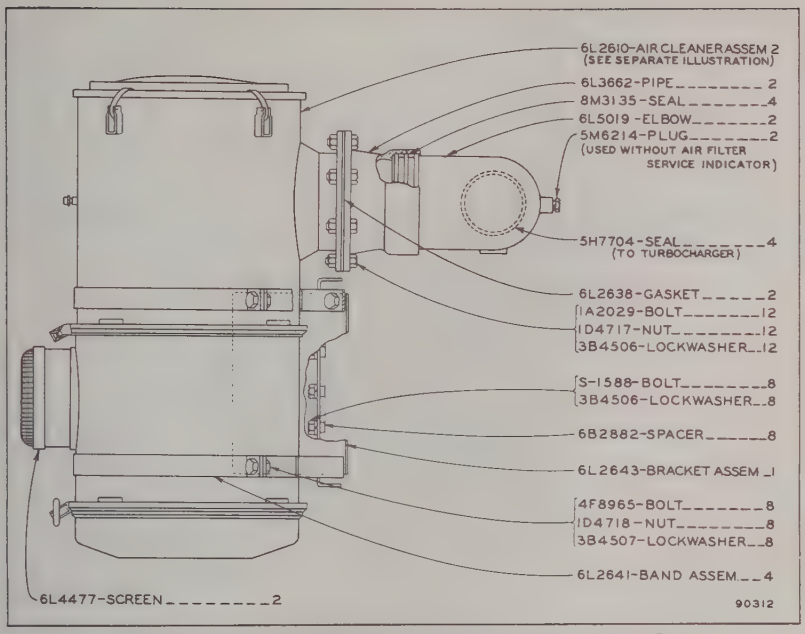

6L2611 AIR CLEANER GROUP--TWO STAGE--HEAVY DUTY
SERIAL NO. 68B675 TO 68B1063 INCLUSIVE & 76B1 TO 76B144 INCLUSIVE
FOR USE IN EXTREMELY DUSTY CONDITIONS

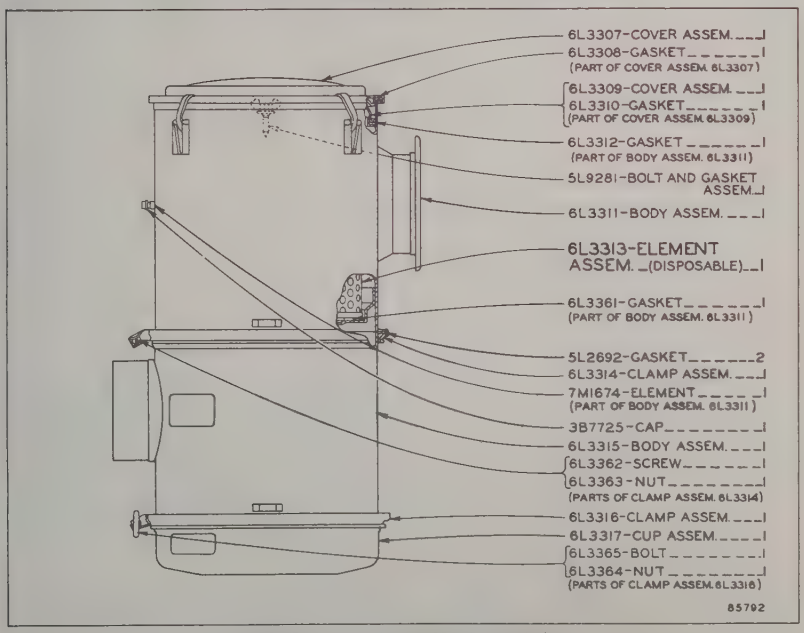

6L2610 AIR CLEANER ASSEMBLY
PART OF 7L2030 AND 6L2611 AIR CLEANER GROUPS
SHOWN ON PAGES 148B AND 149

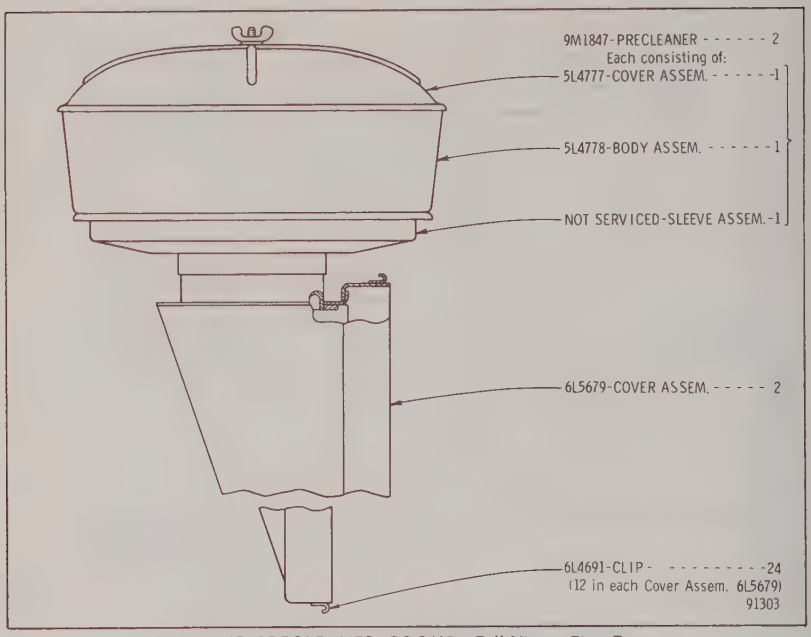

6L5681 AIR PRECLEANER GROUP—Full View—First Type
FOR USE WITH PANEL TYPE AIR CLEANER

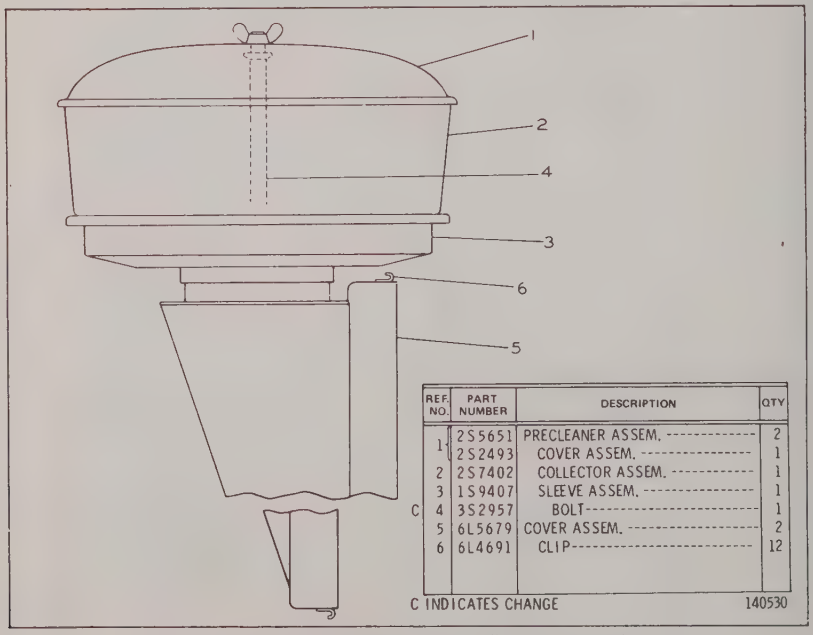

REF. NO.	PART NUMBER	DESCRIPTION	QTY
1	2S5651	PRECLEANER ASSEM.	2
	2S2493	COVER ASSEM.	1
2	2S7402	COLLECTOR ASSEM.	1
3	1S9407	SLEEVE ASSEM.	1
C 4	3S2957	BOLT	1
5	6L5679	COVER ASSEM.	2
6	6L4691	CLIP	12

C INDICATES CHANGE 140530

6L5681 AIR PRECLEANER GROUP—Full View—Second Type
FOR USE WITH PANEL TYPE AIR CLEANER

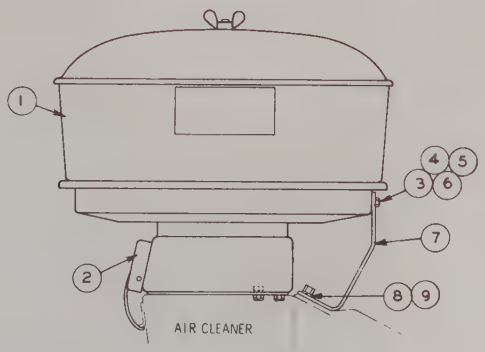

	REF NO	PART NUMBER	DESCRIPTION	QTY
C	1	2S5651	PRECLEANER ASSEM. (Separate Illustration)	2
	2	7L8675	ADAPTER GROUP (Separate Illustration)	2
	3	S1615	BOLT	2
	4	1B4330	NUT	2
	5	3B4504	LOCKWASHER	2
	6	4B4276	WASHER	2
	7	8L5918	BRACE	2
	8	1A2029	BOLT	2
	9	3B4506	LOCKWASHER	2

C INDICATES CHANGE

145467

7L8674 AIR CLEANER AND MOUNTING GROUP
Serial No. 68B1212—Up and 76B207—Up
2S5651 Precleaner parts are shown on Page 150A-2

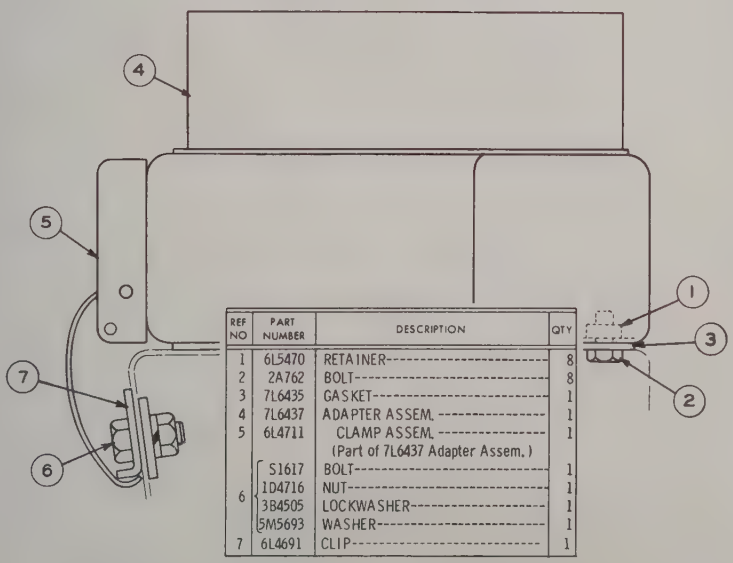

REF NO	PART NUMBER	DESCRIPTION	QTY
1	6L5470	RETAINER	8
2	2A762	BOLT	8
3	7L6435	GASKET	1
4	7L6437	ADAPTER ASSEM.	1
5	6L4711	CLAMP ASSEM. (Part of 7L6437 Adapter Assem.)	1
6	S1617	BOLT	1
	1D4716	NUT	1
	3B4505	LOCKWASHER	1
	5M5693	WASHER	1
7	6L4691	CLIP	1

7L8675 AIR CLEANER ADAPTER GROUP
Part of 7L8674 Air Precleaner and Mounting Group

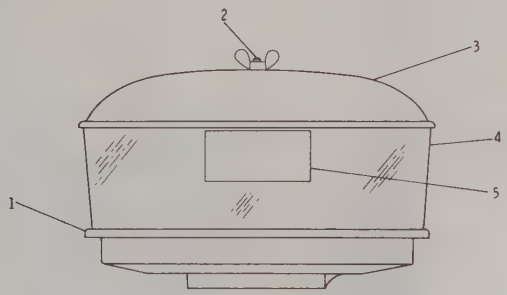

REF. NO	PART NUMBER	DESCRIPTION	QTY
1	1S9407	SLEEVE ASSEM.	1
2	3S2957	BOLT	1
	3S9121	WASHER	1
3	2S2493	COVER ASSEM.	1
4	2S6708	COLLECTOR	1
5	2S7392	FILM ---(precleaner instruction)---	1

119252

2S5651 PRECLEANER ASSEMBLY
Serial No. 68B1212—Up and 76B207—Up
Part of 7L8674 Air Cleaner and Mounting Group shown on Page 150A

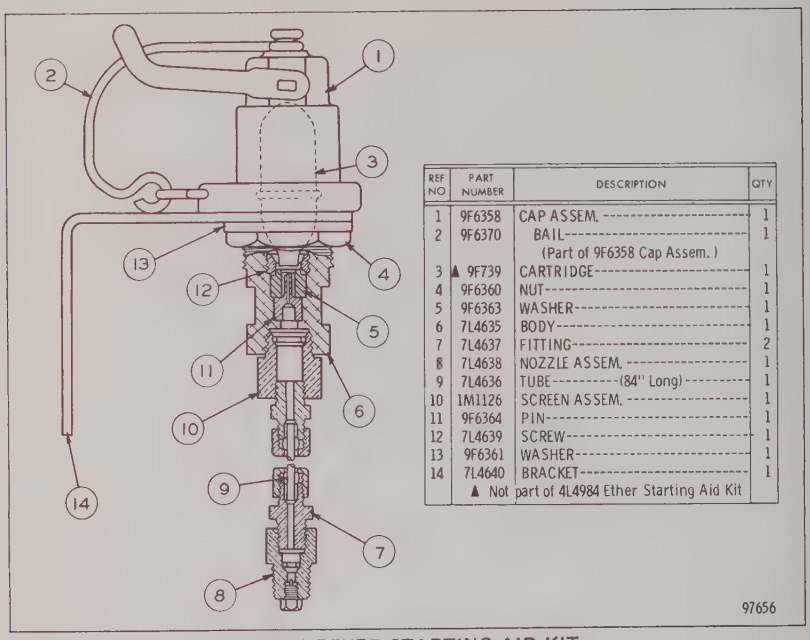

REF NO	PART NUMBER	DESCRIPTION	QTY
1	9F6358	CAP ASSEM.	1
2	9F6370	BAIL (Part of 9F6358 Cap Assem.)	1
3	▲ 9F739	CARTRIDGE	1
4	9F6360	NUT	1
5	9F6363	WASHER	1
6	7L4635	BODY	1
7	7L4637	FITTING	2
8	7L4638	NOZZLE ASSEM.	1
9	7L4636	TUBE (84" Long)	1
10	1M1126	SCREEN ASSEM.	1
11	9F6364	PIN	1
12	7L4639	SCREW	1
13	9F6361	WASHER	1
14	7L4640	BRACKET	1

▲ Not part of 4L4984 Ether Starting Aid Kit

4L4984 ETHER STARTING AID KIT

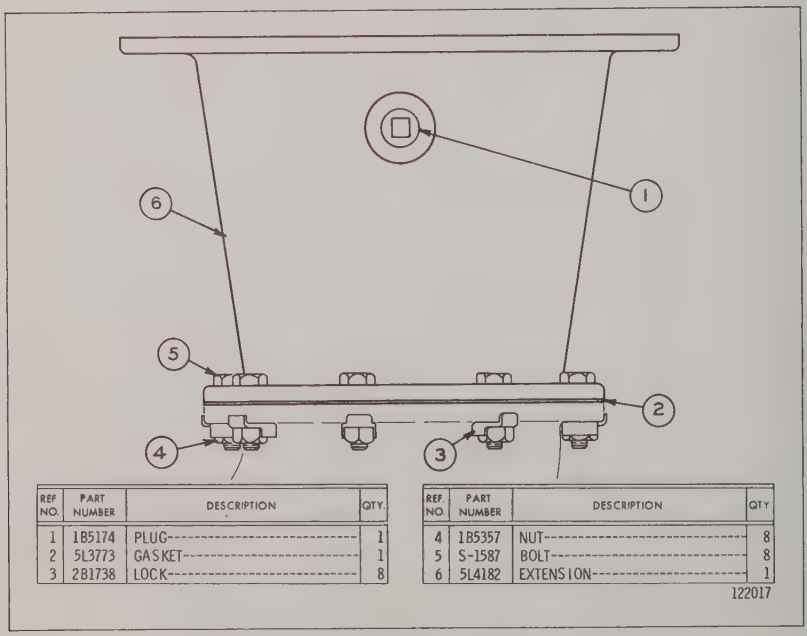

REF NO.	PART NUMBER	DESCRIPTION	QTY.
1	1B5174	PLUG	1
2	5L3773	GASKET	1
3	2B1738	LOCK	8

REF. NO.	PART NUMBER	DESCRIPTION	QTY
4	1B5357	NUT	8
5	S-1587	BOLT	8
6	5L4182	EXTENSION	1

7L444 EXHAUST EXTENSION GROUP—12" Outlet

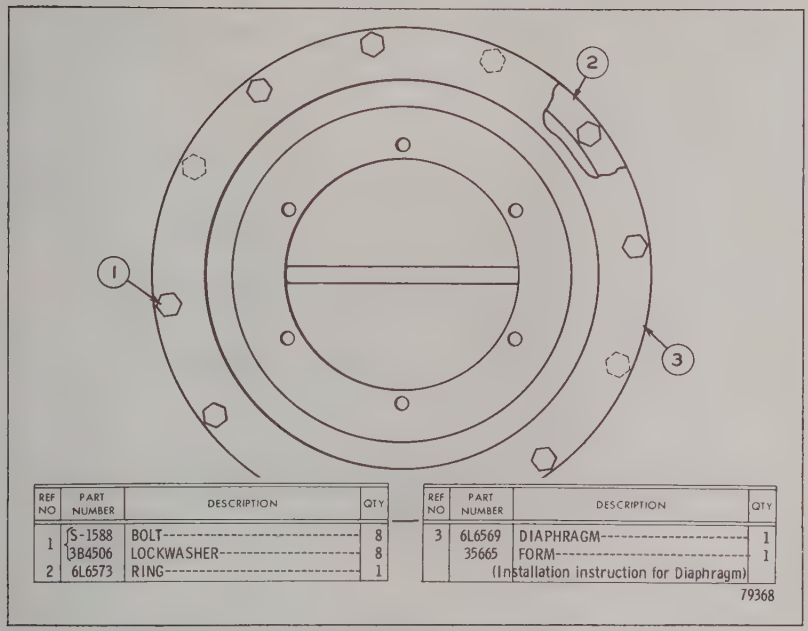

REF NO	PART NUMBER	DESCRIPTION	QTY
1	S-1588	BOLT	8
	3B4506	LOCKWASHER	8
2	6L6573	RING	1

REF NO	PART NUMBER	DESCRIPTION	QTY
3	6L6569	DIAPHRAGM	1
	35665	FORM	1
		(Installation instruction for Diaphragm)	

6L8413 AIR CLEANER DIAPHRAGM REPLACEMENT GROUP
Serial No. 68B675 to 68B797 inclusive and 76B1 to 76B92 inclusive

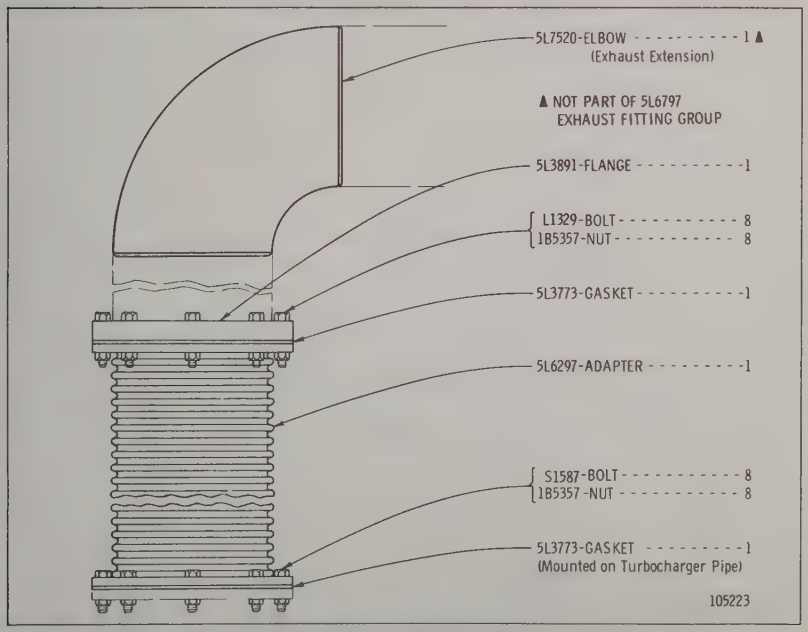

5L6797 FLEXIBLE EXHAUST FITTING GROUP—8 Inch

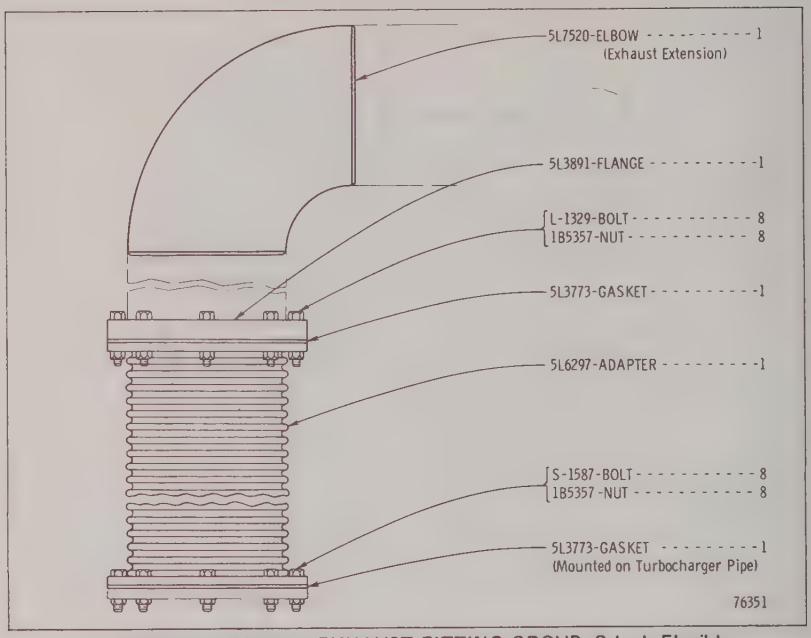

6L3733 HORIZONTAL EXHAUST FITTING GROUP—8 Inch Flexible
Only separate parts serviced
When complete Group is required order 5L6797 shown on Page 151

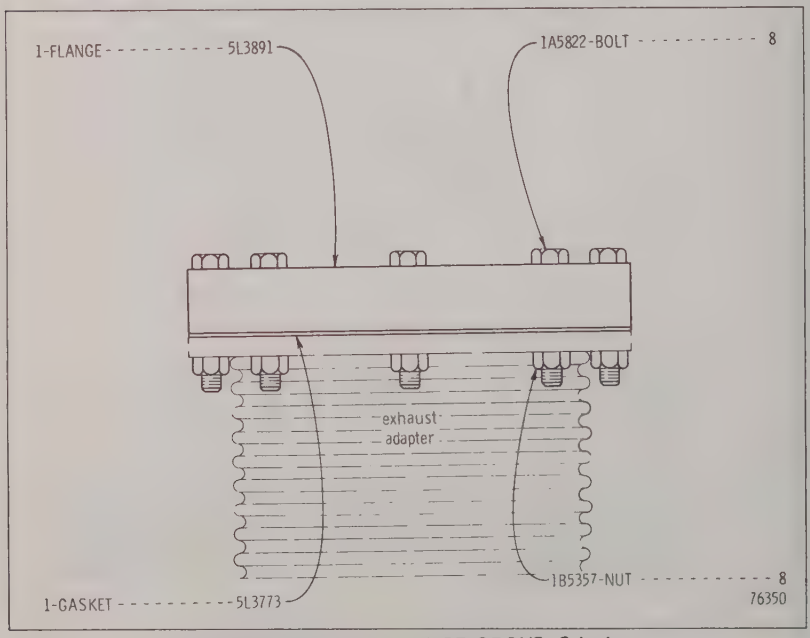

6L3642 EXHAUST FLANGE GROUP—8 Inch

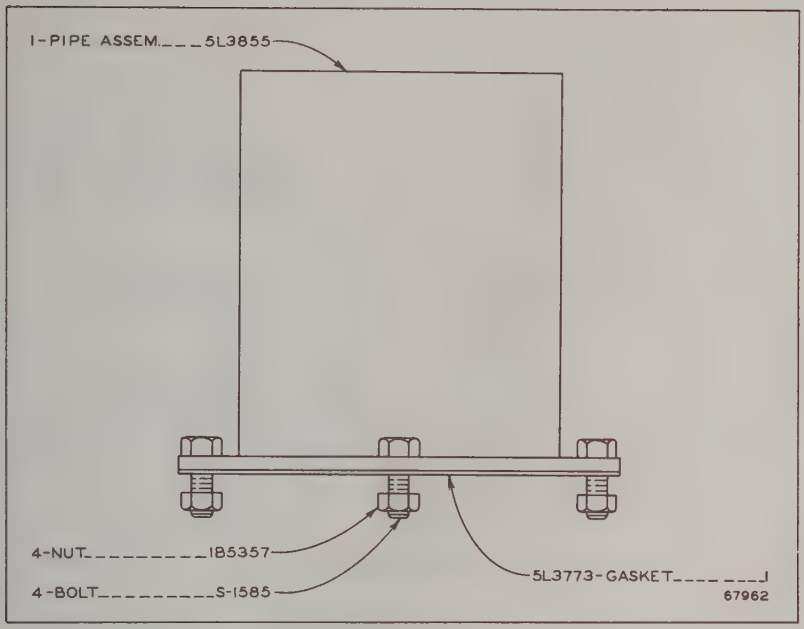

5L3338 EXHAUST PIPE GROUP—8 Inch

Consists of:

1 5L7434 Tachometer Assembly—12 Volt

— or —

1 5L7445 Tachometer Assembly—24 or 32 Volt

1 5L7452 Sending Unit Assembly

ELECTRIC TACHOMETERS

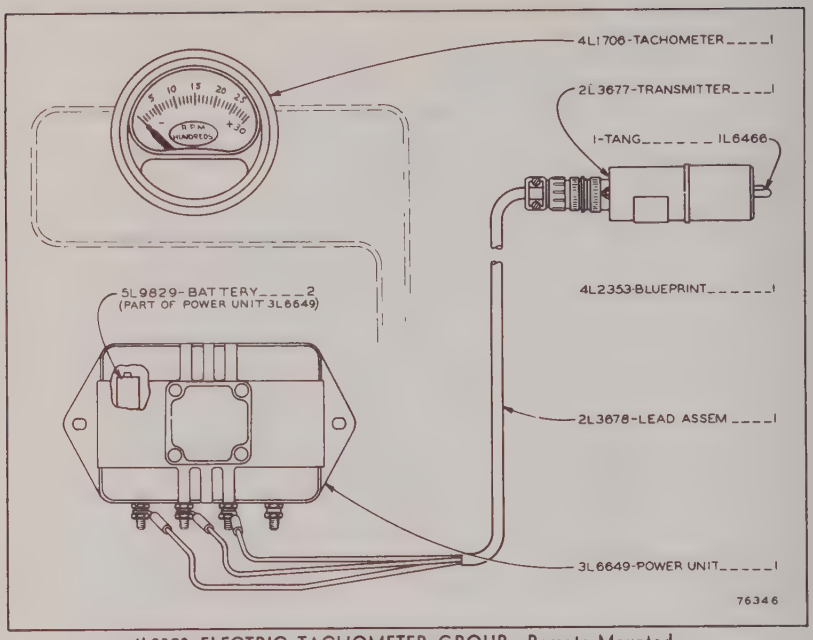

4L2353 ELECTRIC TACHOMETER GROUP—Remote Mounted

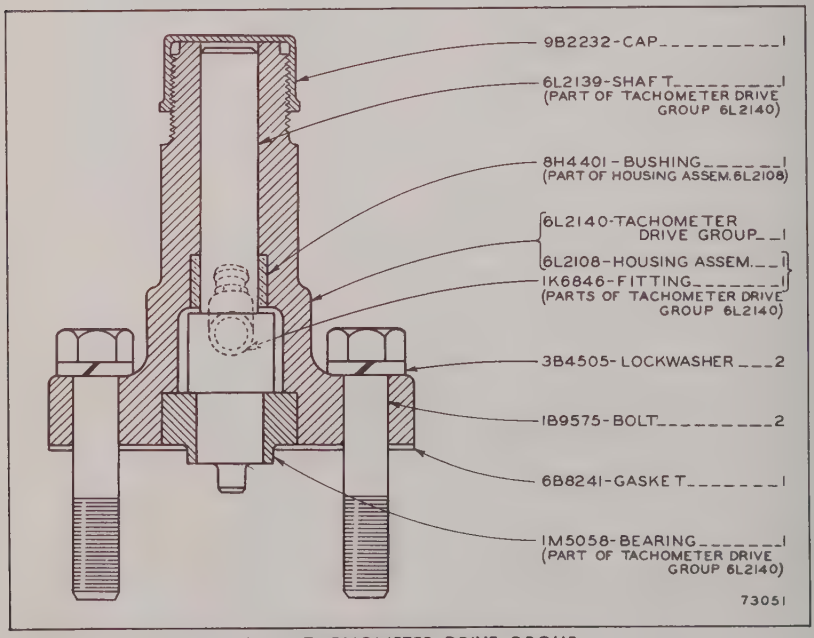

6L2211 TACHOMETER DRIVE GROUP

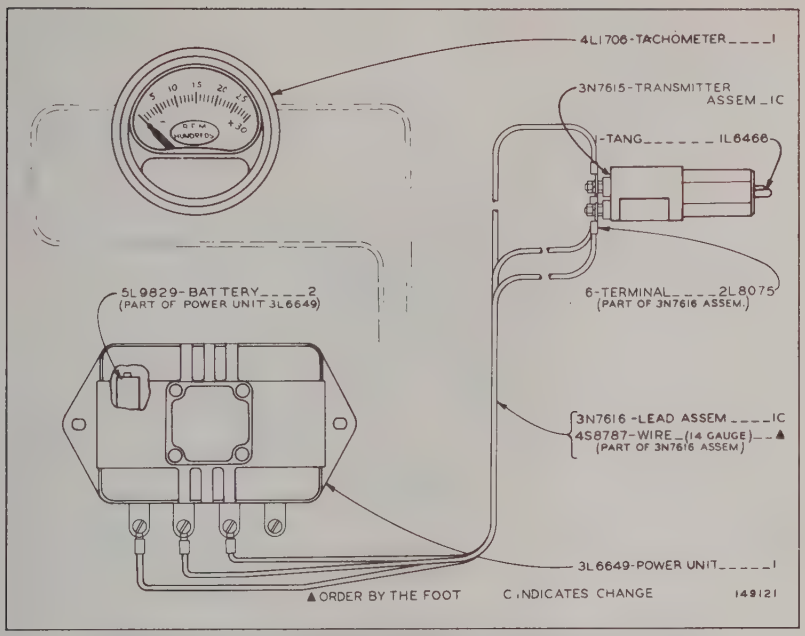

4L2353 ELECTRIC TACHOMETER GROUP—Remote Mounted—Type 2

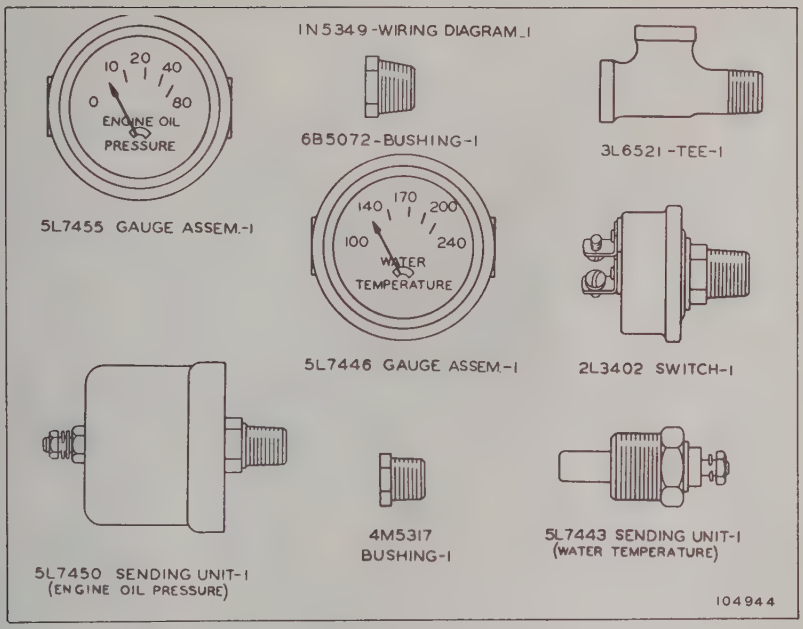

5L9894 INSTRUMENT GROUP—Electrical Instruments—12 Volt

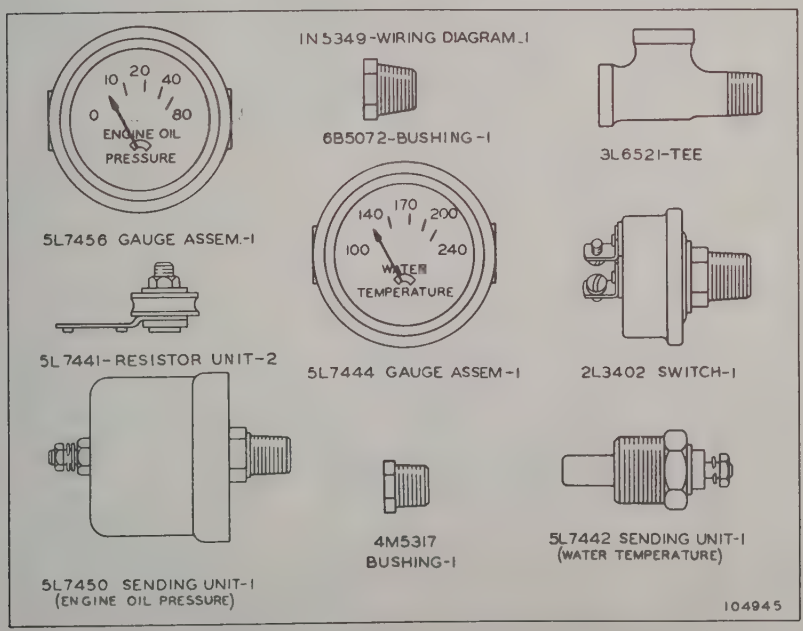

5L9895 INSTRUMENT GROUP—Electrical Instruments—24 Volt or 32 Volt

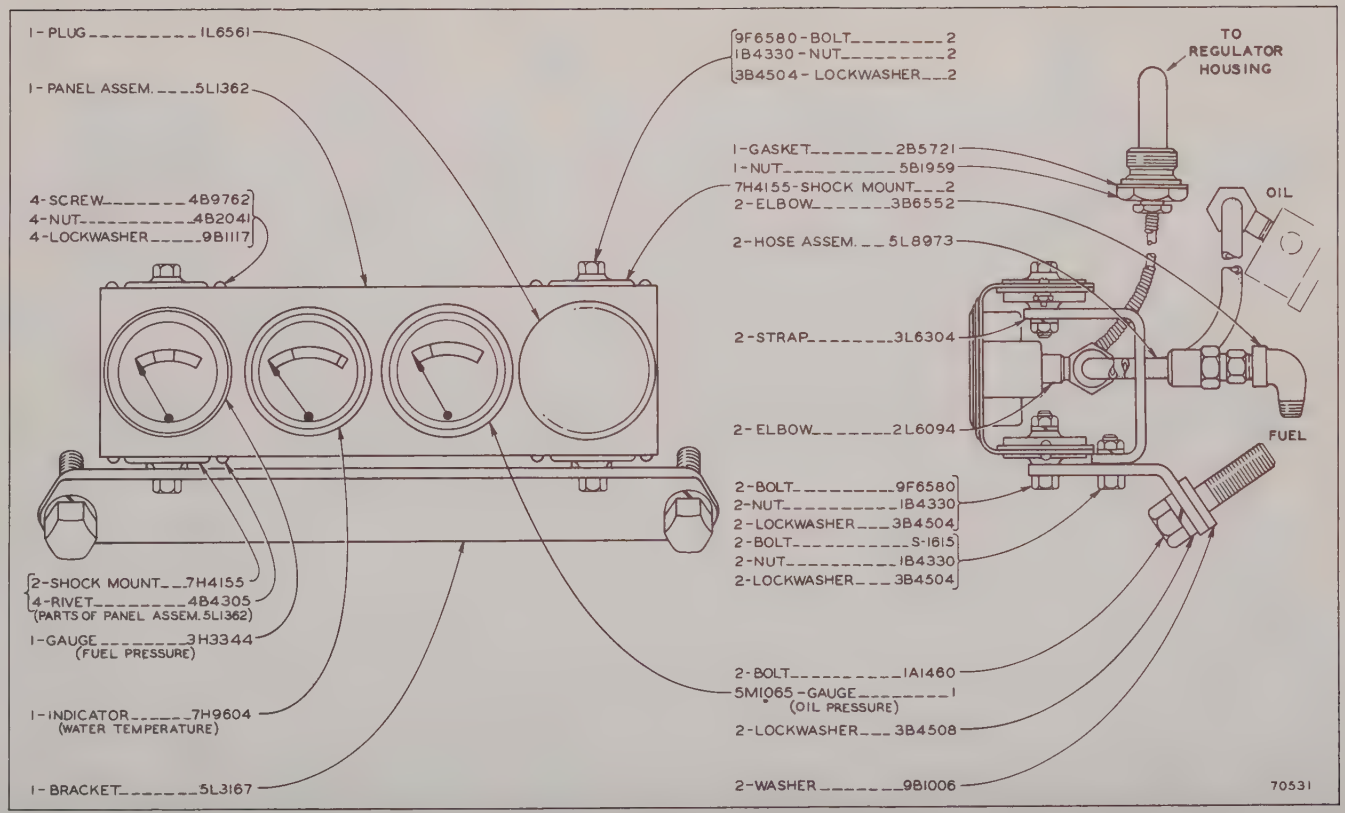

4L8747 INSTRUMENT PANEL GROUP—Mechanical Instruments
Effective with Serial No. 68B675

6L8981 INSTRUMENT PANEL GROUP--Mechanical Instruments
Effective with Serial No. 68B675

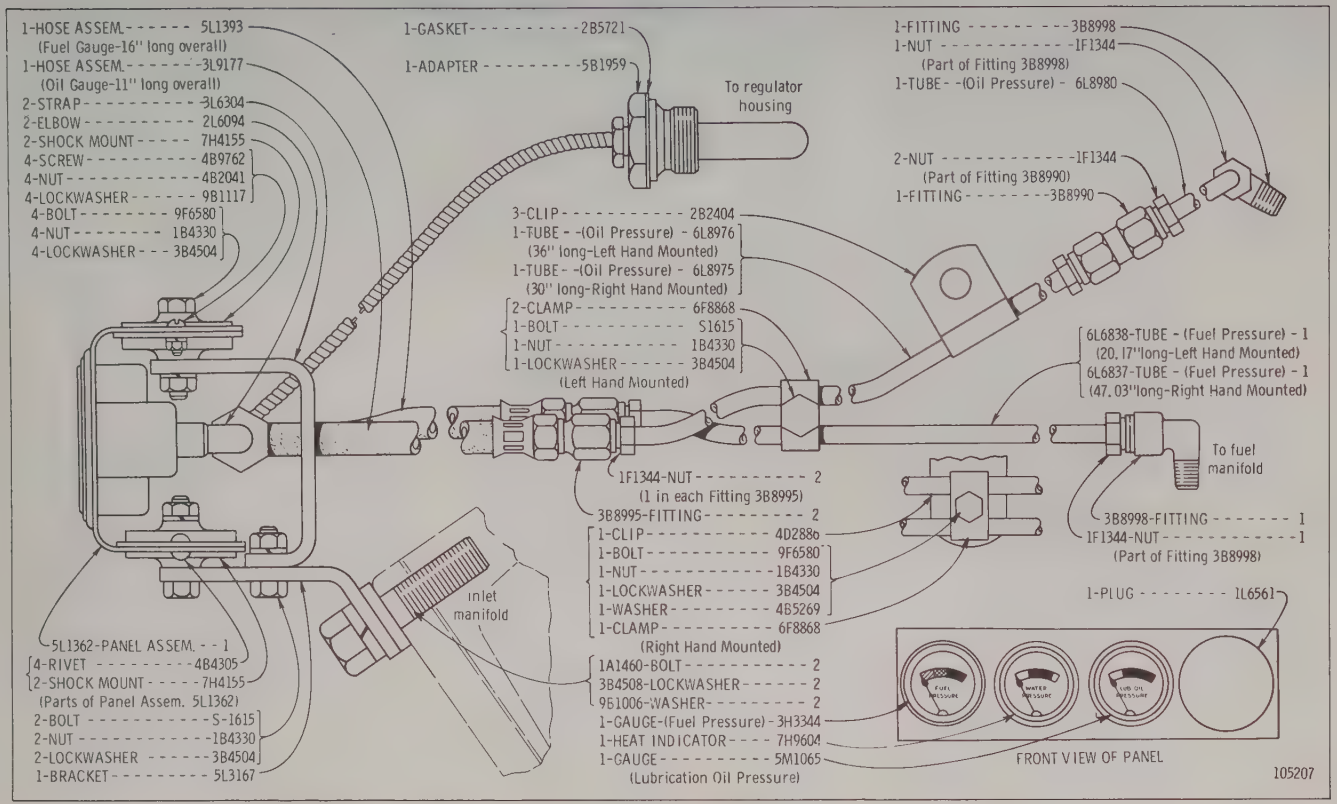

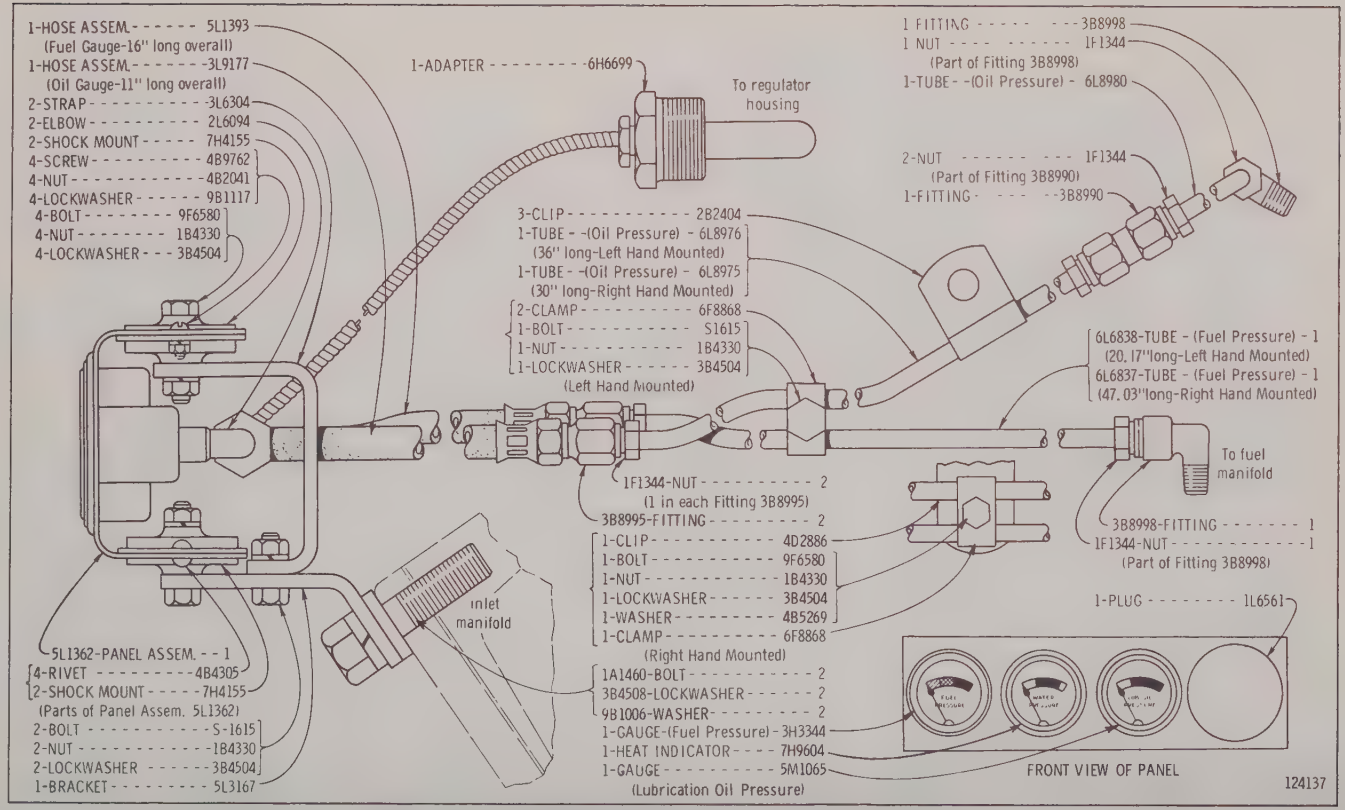

6L8981 INSTRUMENT PANEL GROUP—Mechanical Instruments
Effective with Serial No. 76B1

2N9924 SAFETY SHUT-OFF GROUP

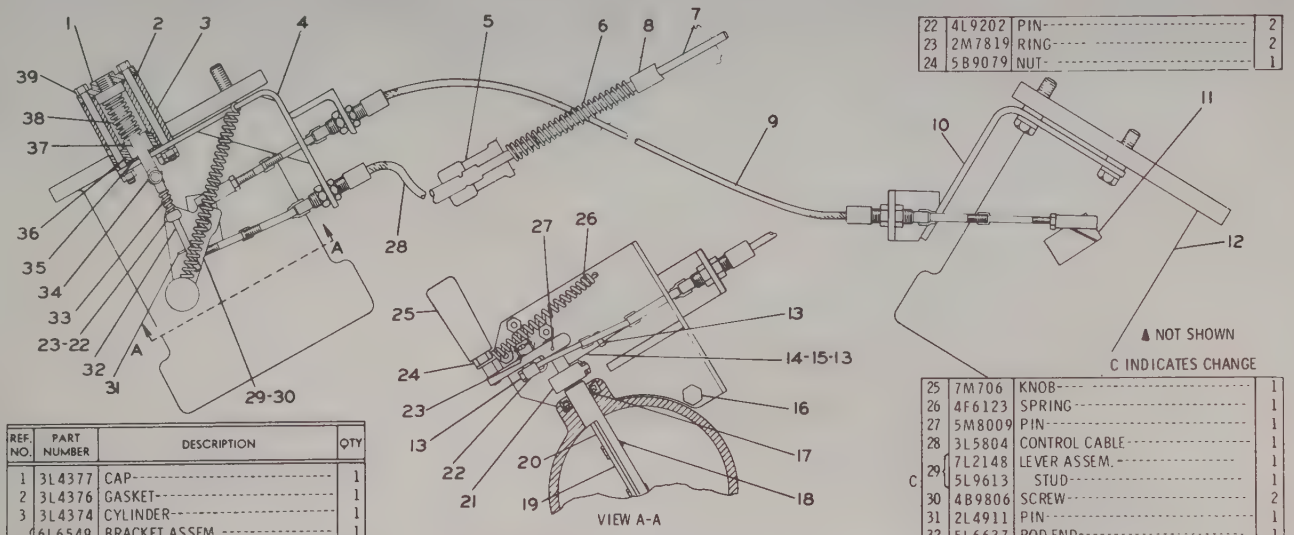

REF. NO.	PART NUMBER	DESCRIPTION	QTY
1	3L4377	CAP	1
2	3L4376	GASKET	1
3	3L4374	CYLINDER	1
4	6L6549	BRACKET ASSEM.	1
	1L4099	BUSHING	1
5	3L8677	ADAPTER	1
6	5L5387	SPRING	1
7	5L2145	ROD ASSEM.	1
8	2L3474	COLLAR	1
	5H4792	PIN	1
9	7L7009	CABLE ASSEM.	1
10	5L9061	BRACKET ASSEM.	1
11	5L9063	SHAFT ASSEM.	1
	4L7378	LEVER	1
	2L5894	PIN	1
12	6L9815	HOUSING	2

13	4B2049	NUT	5
14	5B9018	JOINT	2
15	4B4274	WASHER	4
16	S1591	BOLT	4
	5B9627	WASHER	4
17	4F4584	SEAL	2
18	S1614	BOLT	6
19	2N3454	PLATE ASSEM.	2
20	4L3680	LOCK	2
21	5L9064	SHAFT ASSEM.	1
	4L7378	LEVER	1
	2L5894	PIN	1

138432

22	4L9202	PIN	2
23	2M7819	RING	2
24	5B9079	NUT	1

25	7M706	KNOB	1
26	4F6123	SPRING	1
27	5M8009	PIN	1
28	3L5804	CONTROL CABLE	1
C 29	7L2148	LEVER ASSEM.	1
	5L9613	STUD	1
30	4B9806	SCREW	2
31	2L4911	PIN	1
32	5L6637	ROD END	1
33	2M5754	SPRING	1
34	7B8303	PIN	1
	4B4863	WASHER	1
	3B4604	COTTER PIN	1
35	7L7023	WASHER	1
36	7L7022	SPACER	1
37	5L6636	SHAFT	1
38	5L5651	SPRING	1
39	8F8178	BOLT	4
	1B4330	NUT	4
	3B4504	LOCKWASHER	4
▲	3N538	FILM	1

▲ NOT SHOWN
C INDICATES CHANGE

7L5536 SAFETY SHUT-OFF GROUP

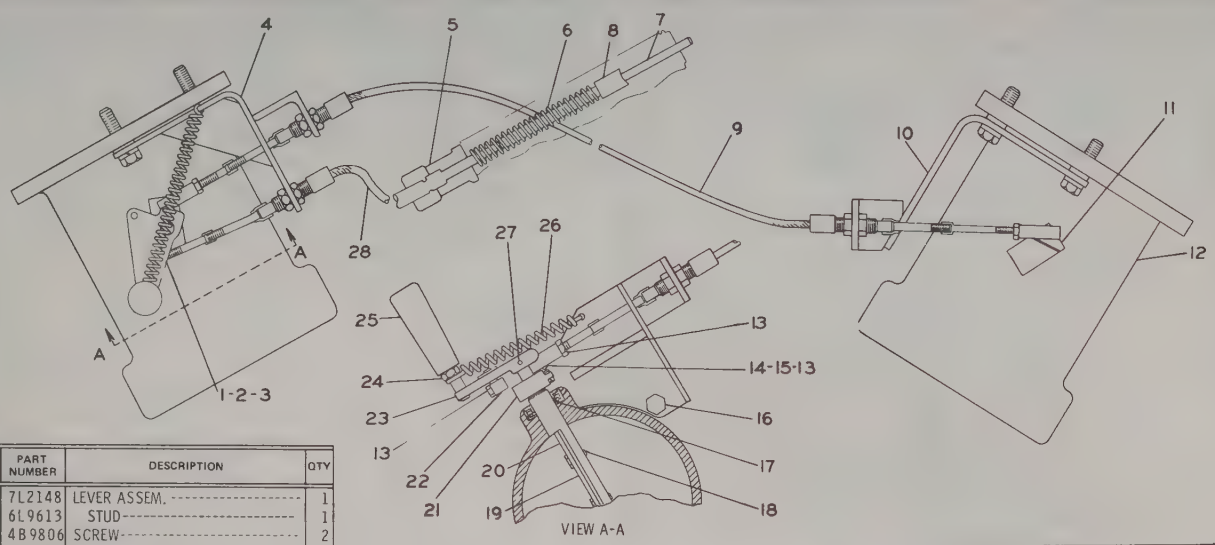

REF. NO.	PART NUMBER	DESCRIPTION	QTY
1	7L2148	LEVER ASSEM.	1
2	6L9613	STUD	1
3	4B9806	SCREW	2
4	5L9062	BRACKET ASSEM.	1
5	3L8677	ADAPTER	1
6	5L5387	SPRING	1
7	5L2145	ROD ASSEM.	1
8	2L3474	COLLAR	1
	5H4792	PIN	1
9	7L7009	CABLE ASSEM.	1
10	5L9061	BRACKET ASSEM.	1
	5L9063	SHAFT ASSEM.	1
11	4L7378	LEVER	1
	2L5894	PIN	1
12	6L9815	HOUSING	2
13	4B2049	NUT	5
14	5B9018	JOINT	2
15	4B4274	WASHER	4
16	S1591	BOLT	4
	5B9627	WASHER	4
17	4F4584	SEAL	2
18	S1614	BOLT	6
19	2N3454	PLATE ASSEM.	2
20	4L3680	LOCK	2
21	5L9064	SHAFT ASSEM.	1
	4L7378	LEVER	1
	2L5894	PIN	1
22	4L9202	PIN	2
23	2M7819	RING	2
24	5B9079	NUT	1
25	7M706	KNOB	1
26	4F6123	SPRING	1
27	5M8009	PIN	1
28	3L5804	CONTROL CABLE	1
▲	3N538	FILM	1

▲ NOT SHOWN

138465

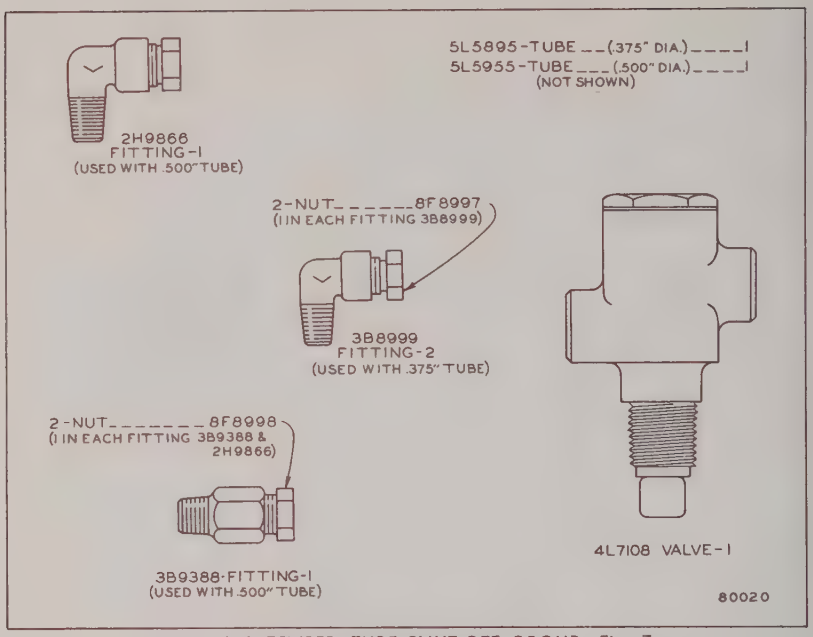

5L5956 WATER TEMPERATURE SHUT-OFF GROUP—First Type
FOR USE WHERE WATER TEMPERATURE EXCEEDS 210° F.

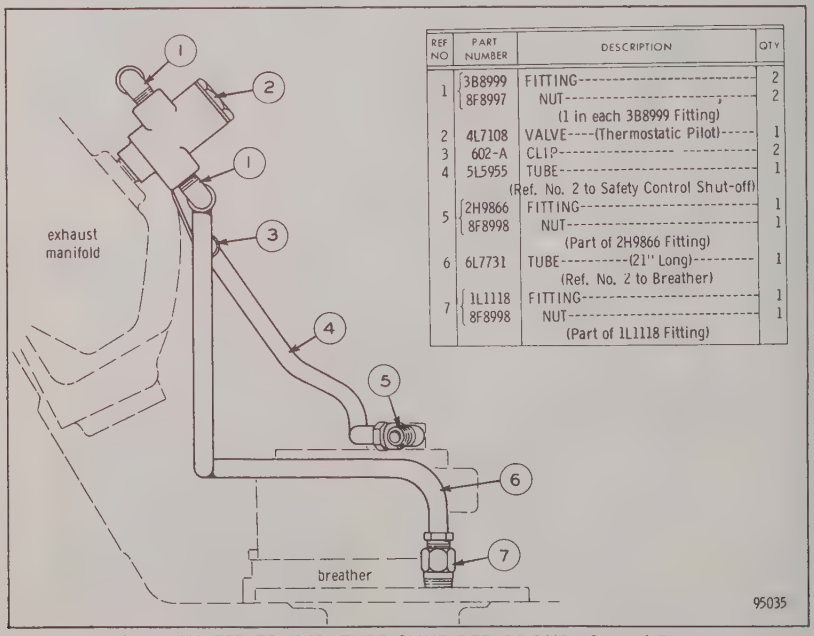

REF NO	PART NUMBER	DESCRIPTION	QTY
1	3B8999	FITTING	2
	8F8997	NUT	2
		(1 in each 3B8999 Fitting)	
2	4L7108	VALVE----(Thermostatic Pilot)	1
3	602-A	CLIP	2
4	5L5955	TUBE	1
		(Ref. No. 2 to Safety Control Shut-off)	
5	2H9866	FITTING	1
	8F8998	NUT	1
		(Part of 2H9866 Fitting)	
6	6L7731	TUBE----(21" Long)	1
		(Ref. No. 2 to Breather)	
7	1L1118	FITTING	1
	8F8998	NUT	1
		(Part of 1L1118 Fitting)	

5L5956 WATER TEMPERATURE SHUT-OFF GROUP—Second Type
FOR USE WHERE WATER TEMPERATURE EXCEEDS 210° F.

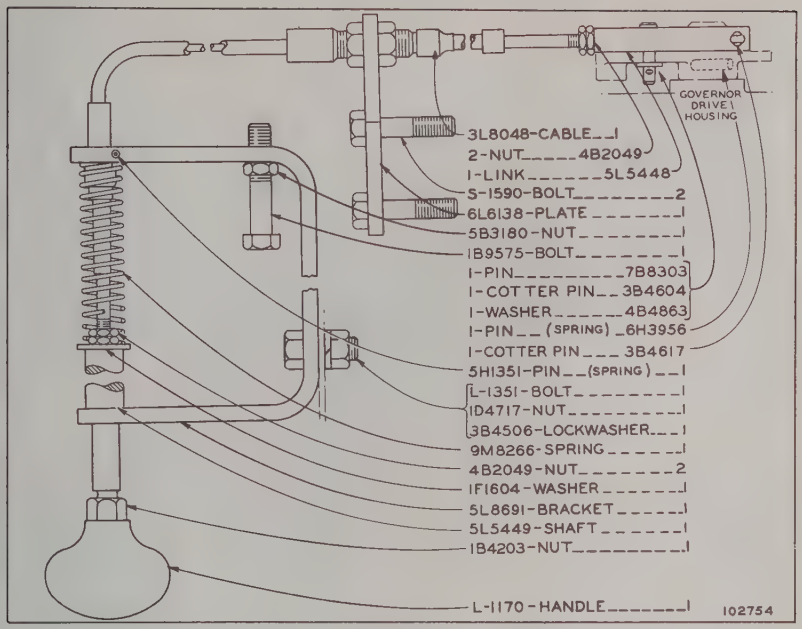

5L5493 MANUAL SHUT-OFF GROUP

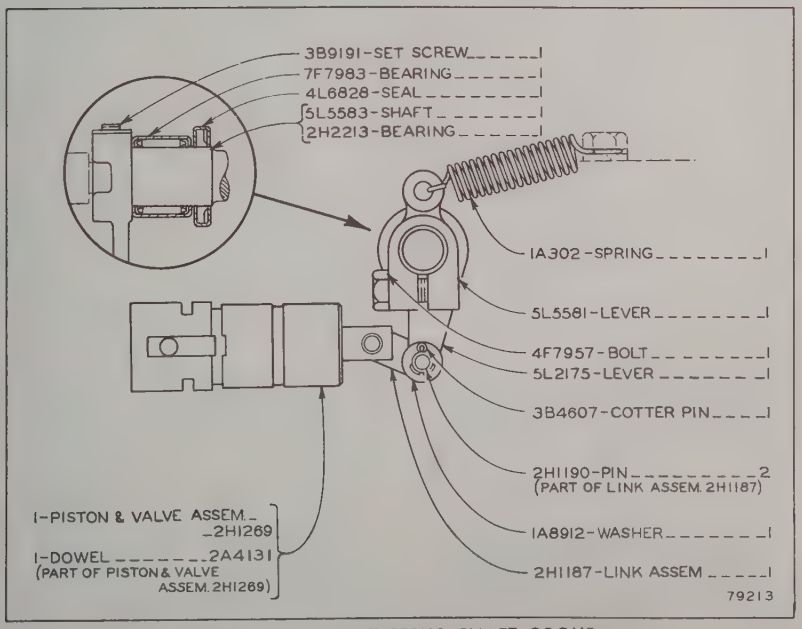

5L2618 RACK LIMIT SERVO SHAFT GROUP
FOR USE WITH SHUT-OFF CONTROLS

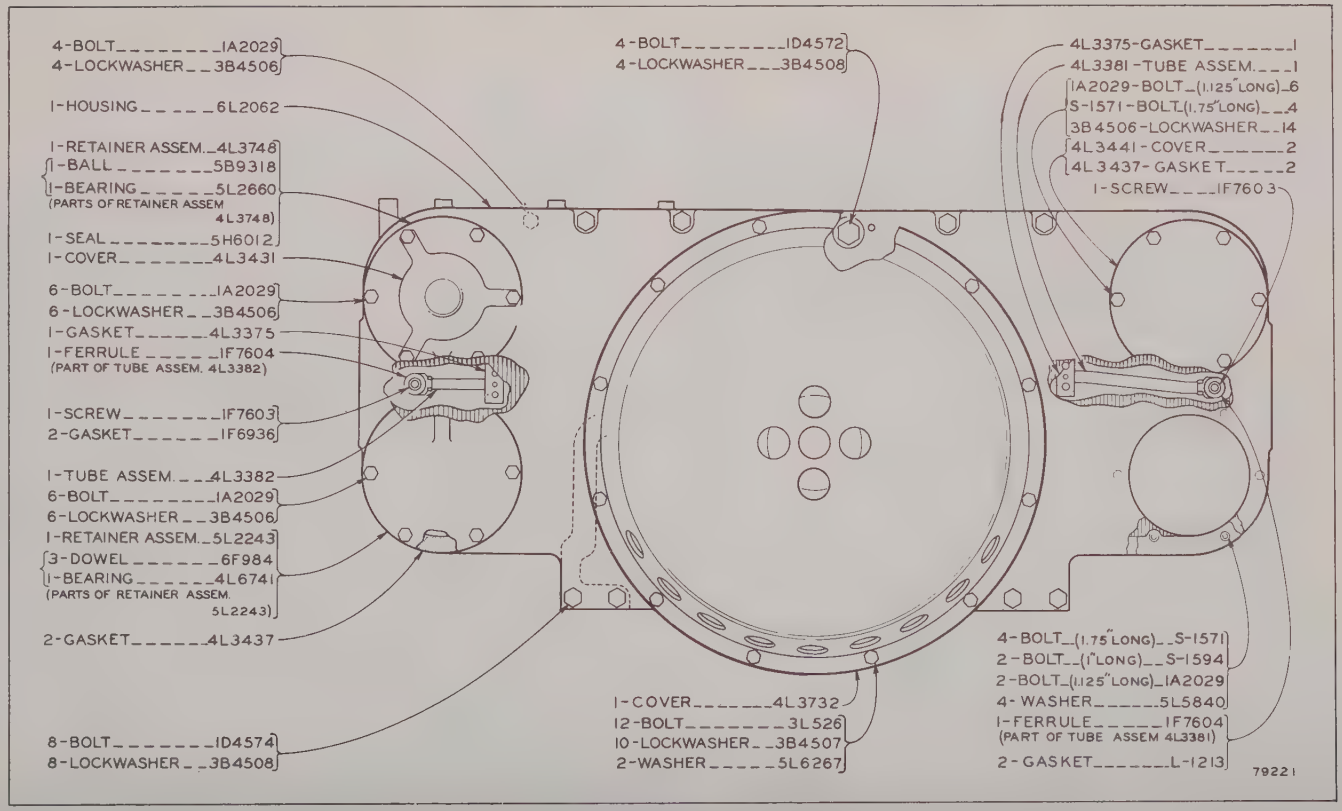

4L1138 FRONT ACCESSORY DRIVE GROUP—S.A.E. Standard Engine Rotation—Part One

Effective with Serial No. 68B675

FOR USE WITH RAW WATER SYSTEM

4L1138 FRONT ACCESSORY DRIVE GROUP—S.A.E. Standard Engine Rotation—Part Two

Effective with Serial No. 68B675

FOR USE WITH RAW WATER SYSTEM

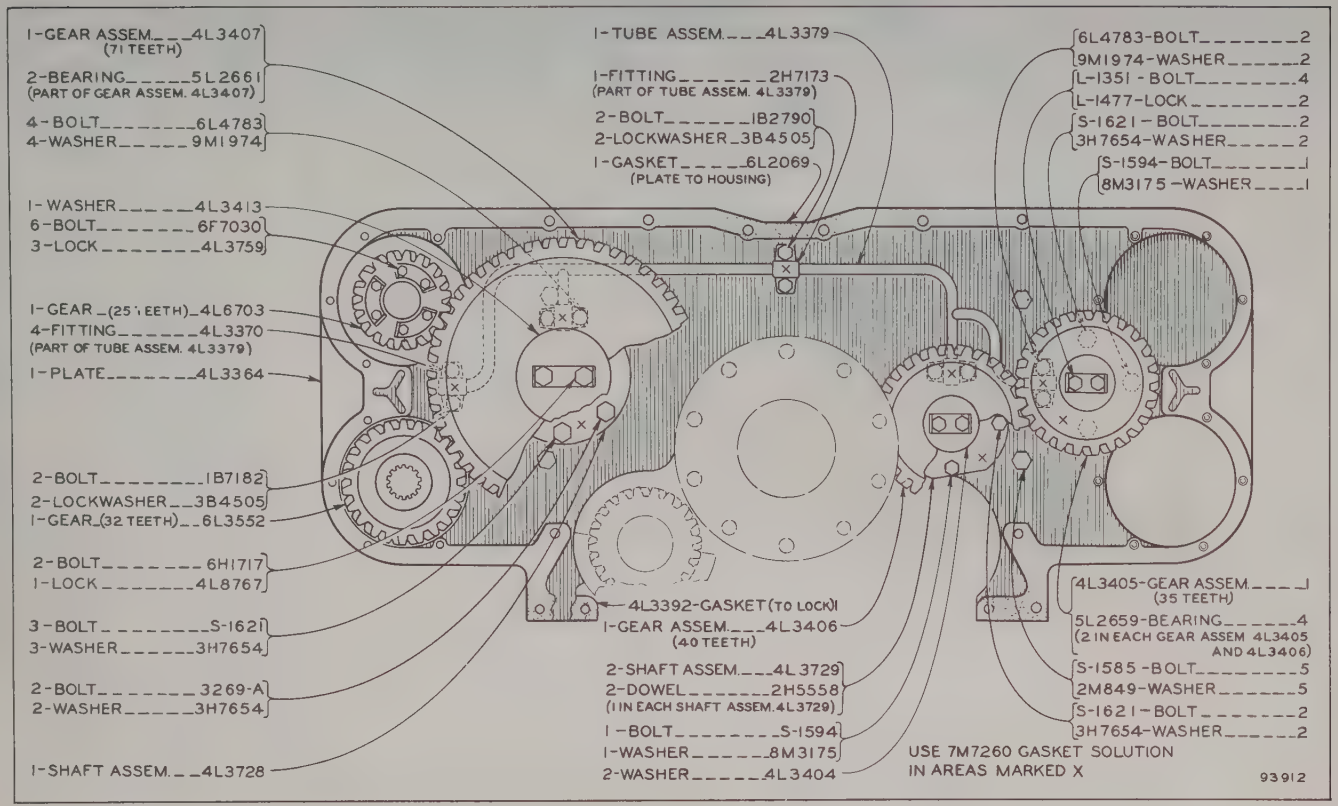

PART NO.	DESCRIPTION	TYPE OF CONTROL							
		RIGHT HAND				LEFT HAND			
		POSITIVE LOCK	REMOTE CABLE	VERNIER	AIR ACTUATOR	POSITIVE LOCK	REMOTE CABLE	VERNIER	AIR ACTUATOR
3L8869	CONTROL GROUP	▨	▨		▨	▨	▨		▨
4L6811	LEVER GROUP		▨	▨			▨	▨	
4L7604	HANDLE GROUP			▨				▨	
4L9581	LINK GROUP			▨				▨	
2L6745	ACTUATOR GROUP				▨				▨
5L4061	LINK ASSEMBLY				▨				▨
1A302	SPRING		▨				▨		
3L2777	BRACKET		▨				▨		
4L9665	BRACKET			▨				▨	
5L1170	BRACKET ASSEMBLY				▨				▨
5L1171	LEVER				▨				▨
6L8889	LEVER EXTENSION				▨				▨
———	HARDWARE - LIST A		▨	▨			▨	▨	
———	HARDWARE - LIST B				▨				▨

LIST A

2-2A762 BOLT 3/8'' X 5/8''	2-3B4506 LOCKWASHER 5/16''
2-S-1618 BOLT 5/16'' X 1''	2-1D4716 NUT 5/16''
2-3B4504 LOCKWASHER 1/4''	

LIST B

1-4B3388 BOLT 5/16'' X 1 1/8''	2-1B4201 NUT 1/4''
4-L-1351 BOLT 3/8'' X 7/8''	1-1A8285 NUT 5/16''
3-S-1595 BOLT 1/2'' X 1 1/4''	3-1D4719 NUT 1/2''
1-S-1618 BOLT 5/16'' X 1''	2-3B4607 COTTER 3/32'' X 1/2''
2-L-1340 BOLT 1/4'' X 7/8''	1-4L7513 ROD-GOVERNOR CONTROL
2-3B4504 LOCKWASHER 1/4''	1-4F1001 END-YOKE
1-3B4505 LOCKWASHER 5/16''	2-2A4133 PIN-YOKE END
4-3B4506 LOCKWASHER 3/8''	1-INSTALLATION INSTRUCTION FORM 35921
3-3B4508 LOCKWASHER 1/2''	
3-4B4280 WASHER 17/32''	

79372

GOVERNOR CONTROL CHART

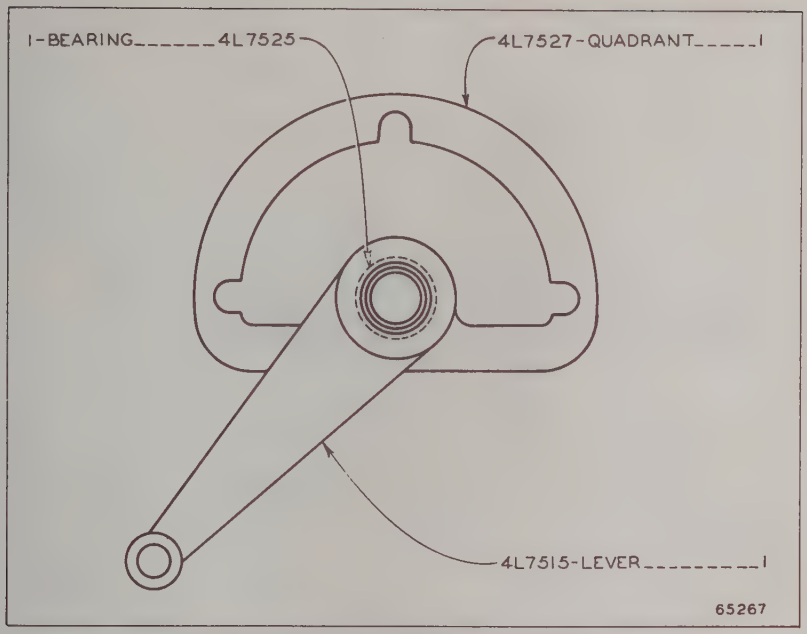

4L6811 GOVERNOR CONTROL LEVER GROUP
Refer to Page 162 for usage

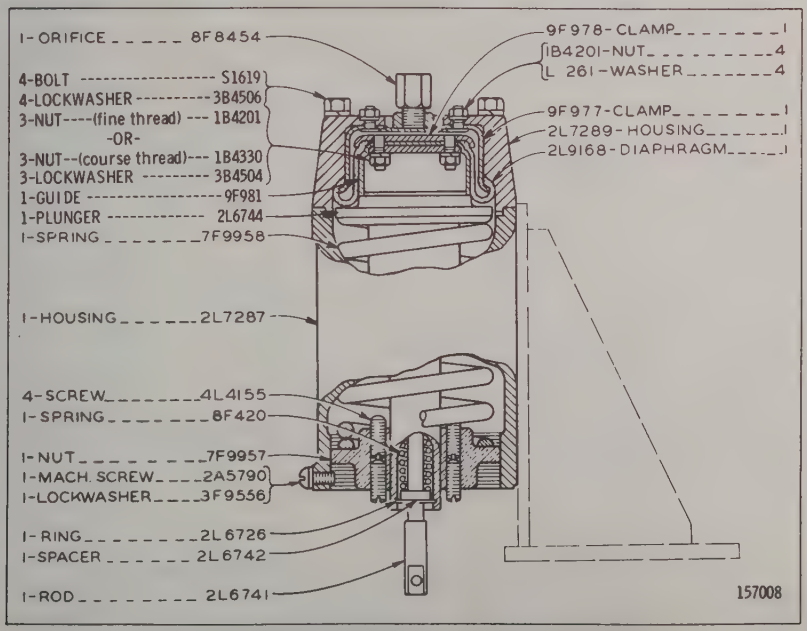

2L6745 GOVERNOR PNEUMATIC ACTUATOR GROUP
Refer to Page 162 for usage

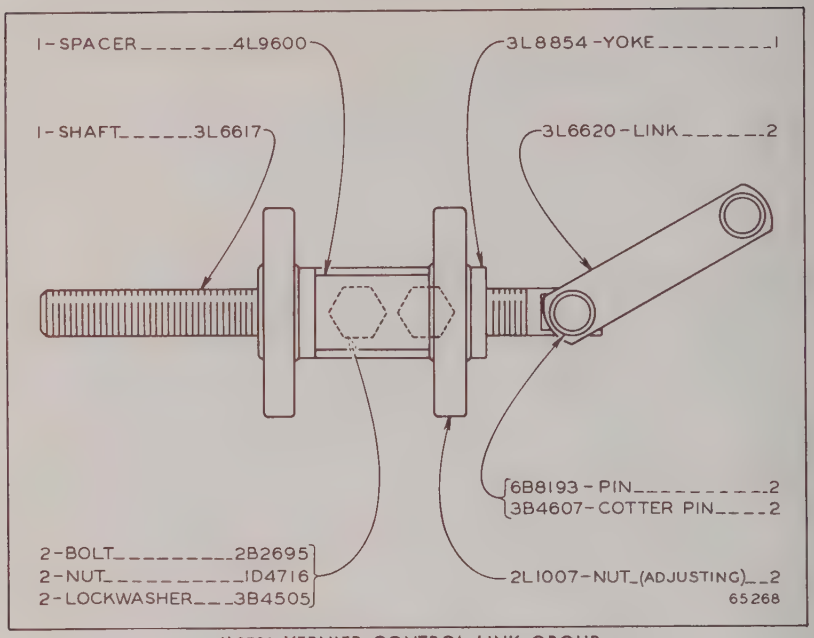

4L9581 VERNIER CONTROL LINK GROUP
Refer to Page 162 for usage

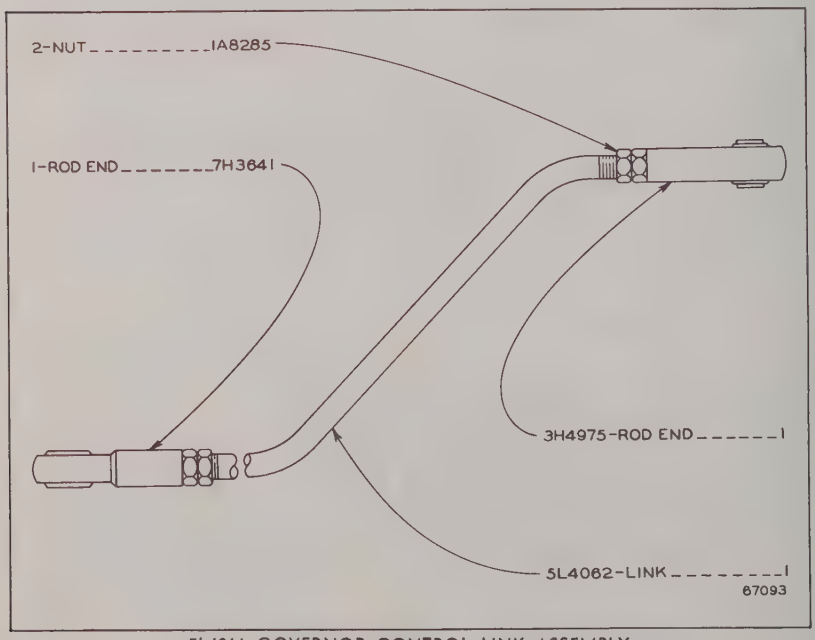

5L4061 GOVERNOR CONTROL LINK ASSEMBLY
Refer to Page 162 for usage

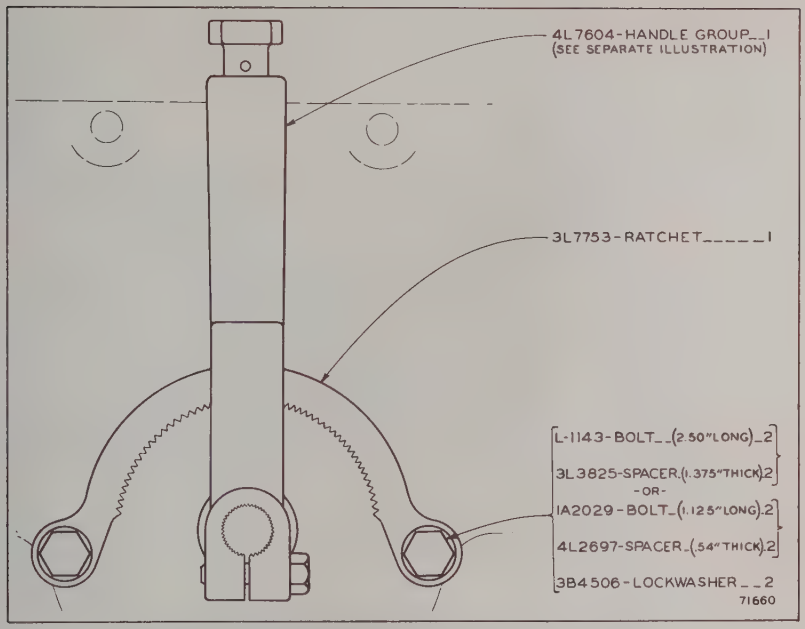

3L8869 GOVERNOR CONTROL GROUP—Positive Locking
4L7604 Control Handle Group parts are shown on Page 166
Refer to Page 162 for usage

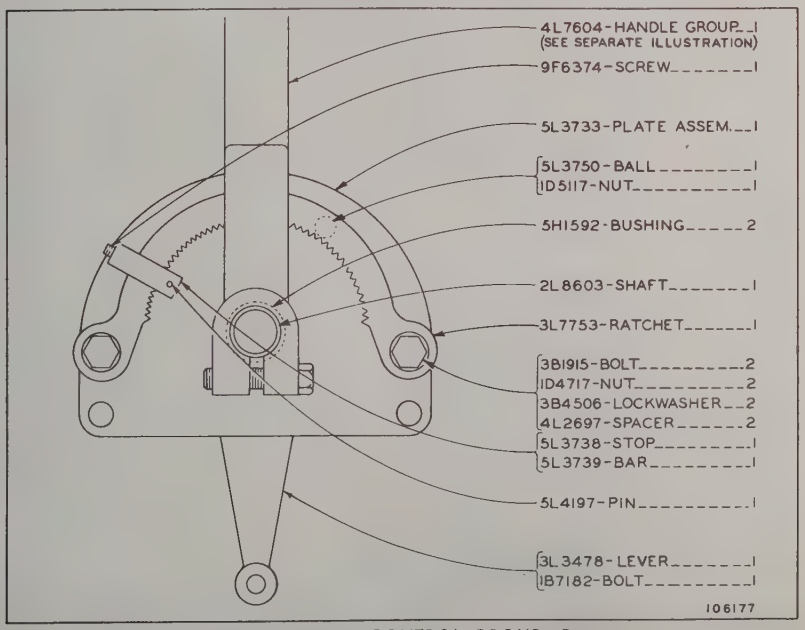

5L3693 GOVERNOR CONTROL GROUP—Remote
4L7604 Control Handle Group parts are shown on Page 166
Refer to Page 162 for usage

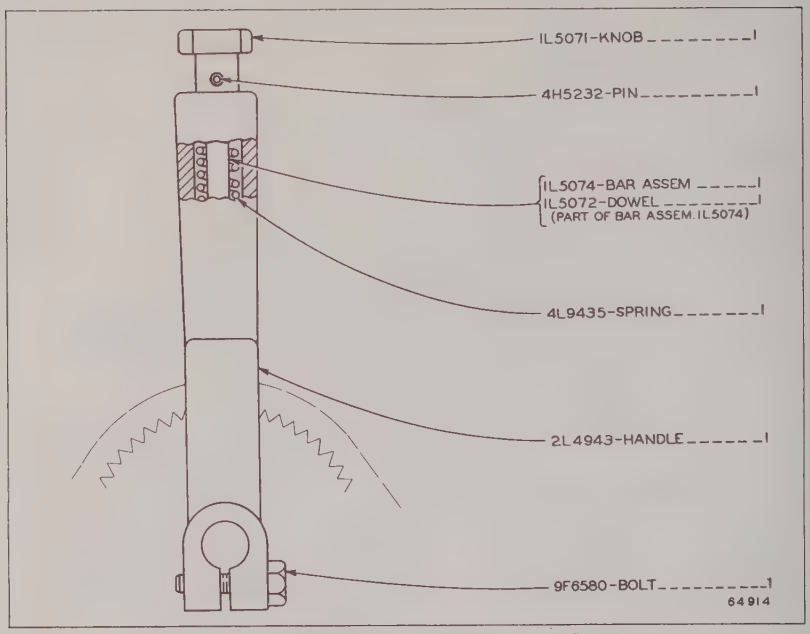

4L7604 CONTROL HANDLE GROUP
Also part of 3L8869 and 5L3693 Governor Control Groups
shown on Page 165. Refer to Page 162 for usage

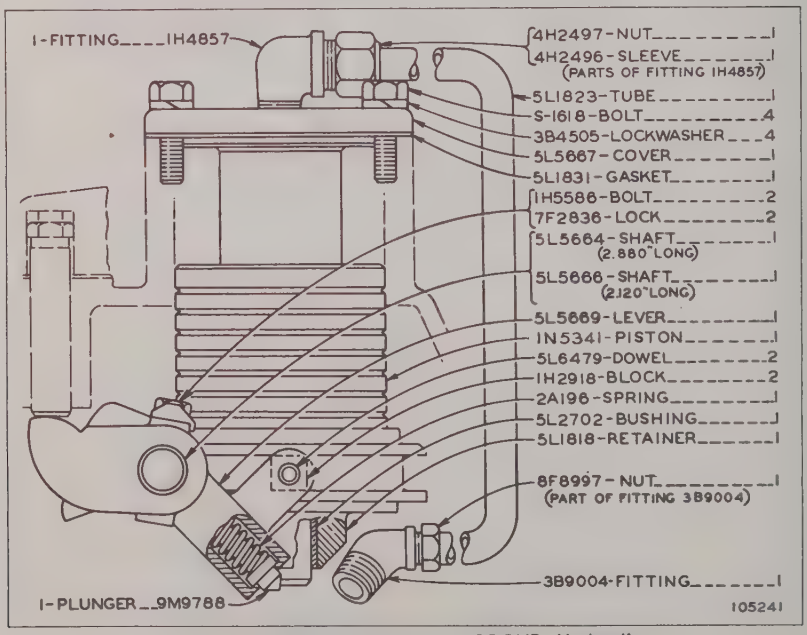

5L1819 GOVERNOR CONTROL GROUP—Hydraulic

CONSISTS OF: PAGE

1 5L4936 WOODWARD GOVERNOR GROUP 167

8 1S2080 NOZZLE ASSEMBLY

8L4475 WOODWARD GOVERNOR ARRANGEMENT
Effective with Serial No. 68B1233

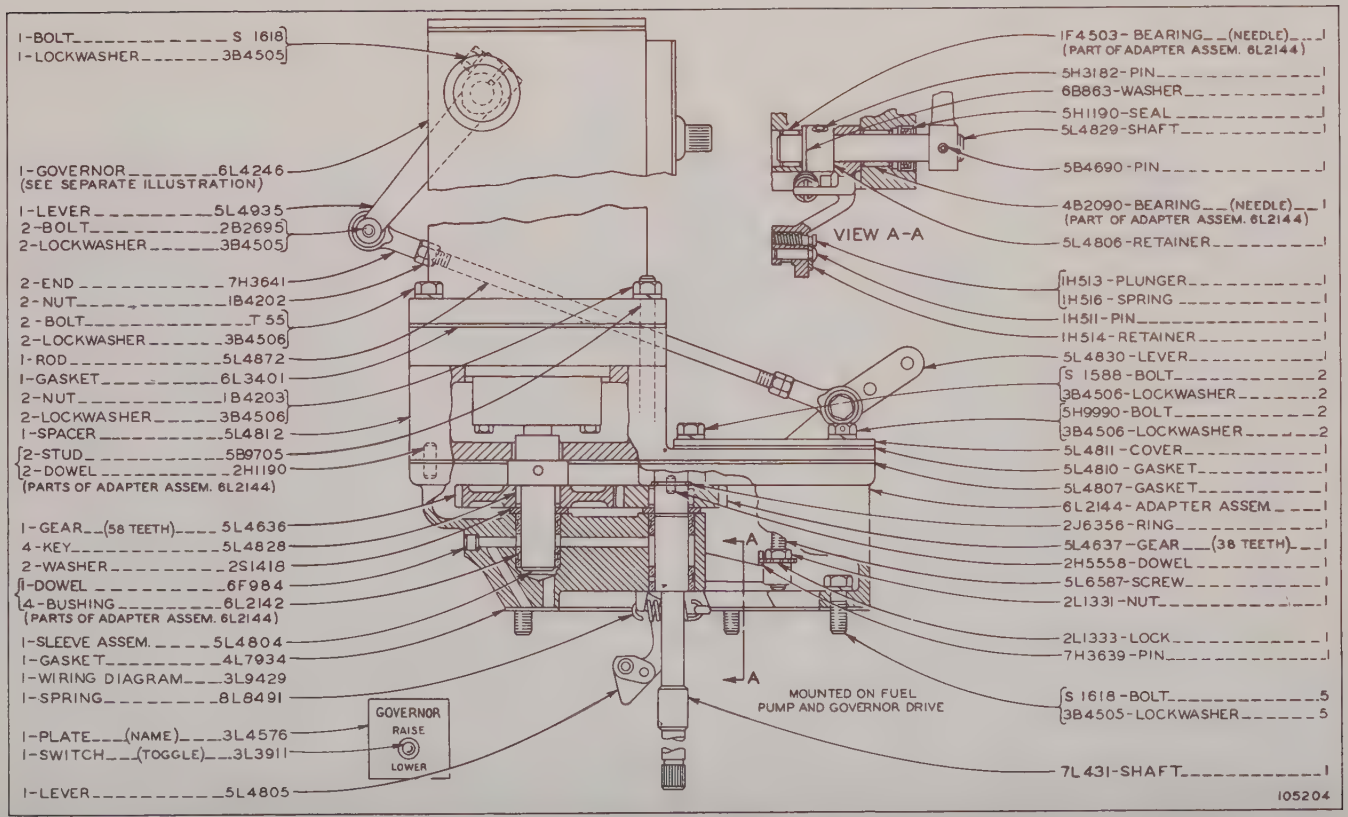

5L4936 WOODWARD GOVERNOR GROUP—Type 1
6L4246 Governor parts are shown on Page 169

5L4936 WOODWARD GOVERNOR GROUP—Type 2

Also part of 8L4475 Woodward Governor Arrangement listed on Page 166A. 8L8919 Governor parts are shown on Page 168B

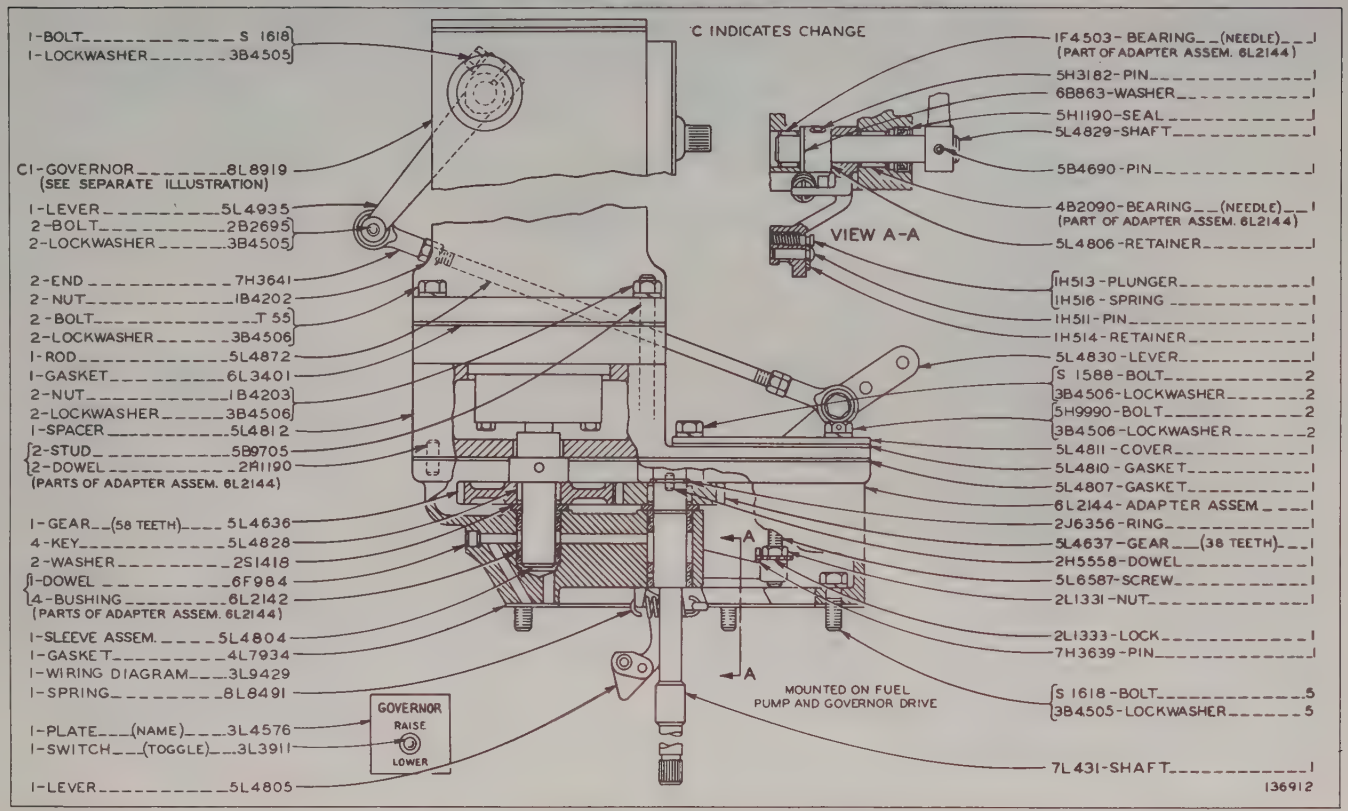

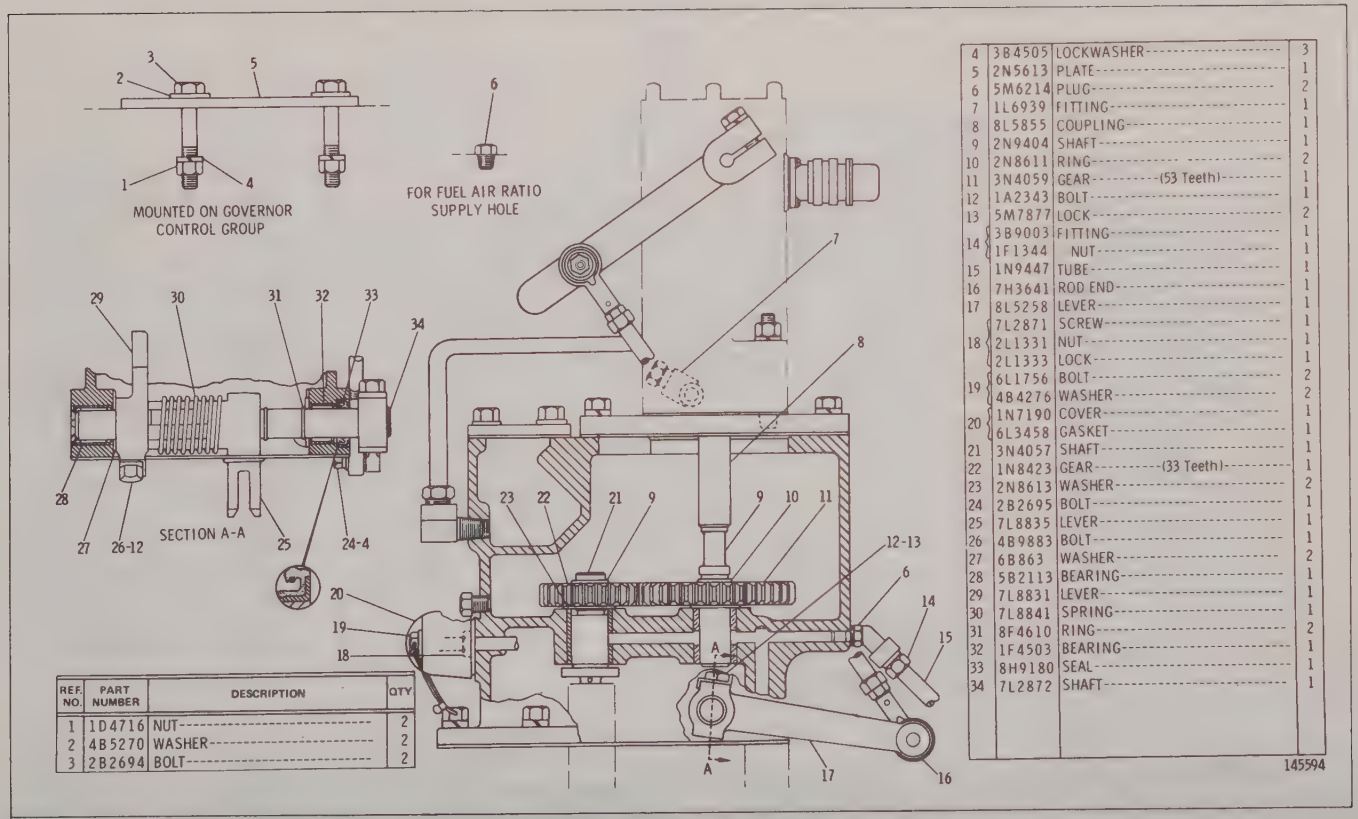

REF. NO.	PART NUMBER	DESCRIPTION	QTY
1	1D4716	NUT	2
2	4B5270	WASHER	2
3	2B2694	BOLT	2
4	3B4505	LOCKWASHER	3
5	2N5613	PLATE	1
6	5M6214	PLUG	2
7	1L6939	FITTING	1
8	8L5855	COUPLING	1
9	2N9404	SHAFT	1
10	2N8611	RING	2
11	3N4059	GEAR (53 Teeth)	1
12	1A2343	BOLT	1
13	5M7877	LOCK	2
14	3B9003	FITTING	1
	1F1344	NUT	1
15	1N9447	TUBE	1
16	7H3641	ROD END	1
17	8L5258	LEVER	1
18	7L2871	SCREW	1
	2L1331	NUT	1
	2L1333	LOCK	1
19	6L1756	BOLT	2
	4B4276	WASHER	2
20	1N7190	COVER	1
	6L3458	GASKET	1
21	3N4057	SHAFT	1
22	1N8423	GEAR (33 Teeth)	1
23	2N8613	WASHER	2
24	2B2695	BOLT	1
25	7L8835	LEVER	1
26	4B9883	BOLT	1
27	6B863	WASHER	2
28	5B2113	BEARING	1
29	7L8831	LEVER	1
30	7L8841	SPRING	1
31	8F4610	RING	2
32	1F4503	BEARING	1
33	8H9180	SEAL	1
34	7L2872	SHAFT	1

3N4190 WOODWARD GOVERNOR DRIVE GROUP—Electric—Part 1
Serial No. 68B1509—Up
6N7490 Actuator is available

3N4190 WOODWARD GOVERNOR DRIVE GROUP—Electric—Part 2

Serial No. 68B1509—Up

6N7490 Actuator is available

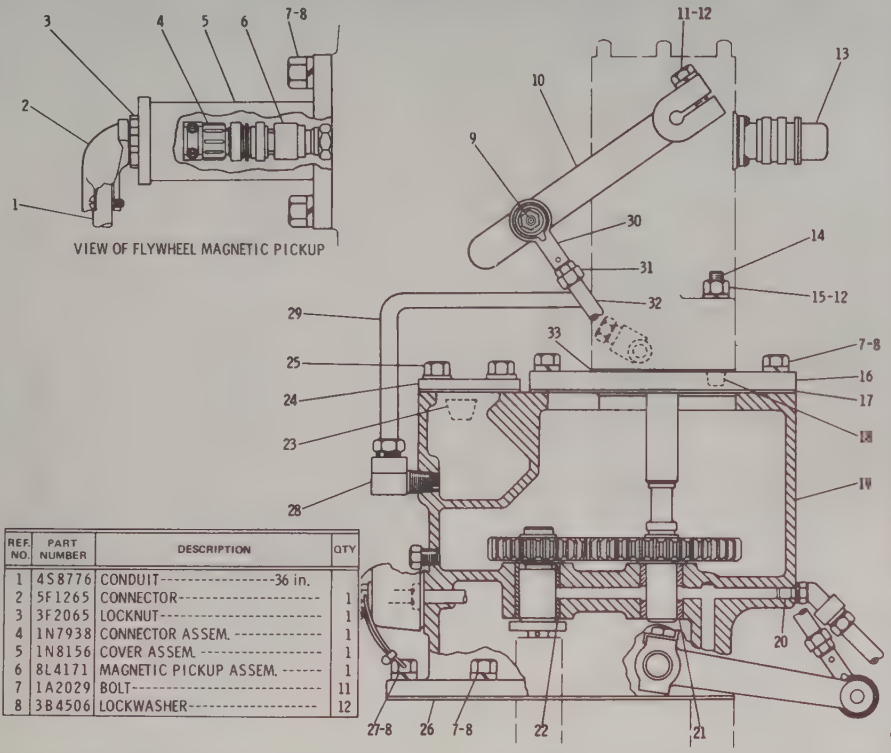

REF. NO.	PART NUMBER	DESCRIPTION	QTY
▲ 1	4S8776	CONDUIT----------36 in.	
2	5F1265	CONNECTOR----------	1
3	3F2065	LOCKNUT----------	1
4	1N7938	CONNECTOR ASSEM.----------	1
5	1N8156	COVER ASSEM.----------	1
6	8L4171	MAGNETIC PICKUP ASSEM.------	1
7	1A2029	BOLT----------	11
8	3B4506	LOCKWASHER----------	12

REF. NO.	PART NUMBER	DESCRIPTION	QTY
9	9F7022	BOLT----------	1
	1B4330	NUT----------	1
	3B4504	LOCKWASHER----------	1
	5L8370	SPACER----------	1
	2M7819	RING----------	1
10	3N4301	LEVER----------	1
11	4B3388	BOLT----------	1
12	3B4505	LOCKWASHER----------	3
13	8L8424	CONNECTOR----------	1
14	1N5946	STUD----------	2
15	1D4716	NUT----------	2
16	5L9200	ADAPTER----------	1
17	6L3401	GASKET----------	1
18	9F2247	PLUG----------	1
19	3N4061	HOUSING ASSEM.----------	1
	7H3639	PIN----------	1
20	2F4547	DOWEL----------	3
21	8M7753	BEARING----------	1
22	6L2142	BUSHING----------	2
23	5J7389	PLUG----------	1
24	4N4322	PLATE----------	1
	4N4321	GASKET----------	1
25	1B7182	BOLT----------	4
	3B4505	LOCKWASHER----------	4
26	7L8682	GASKET----------	1
27	5H9990	BOLT----------	1
28	5K9235	ELBOW----------	1
29	3N4302	TUBE ASSEM.----------	1
30	7L4186	ROD END----------	1
31	1B4202	NUT----------	2
32	7H3640	ROD----------	1
33	4N6497	GASKET----------	1

▲ ORDER BY THE FOOT

145595

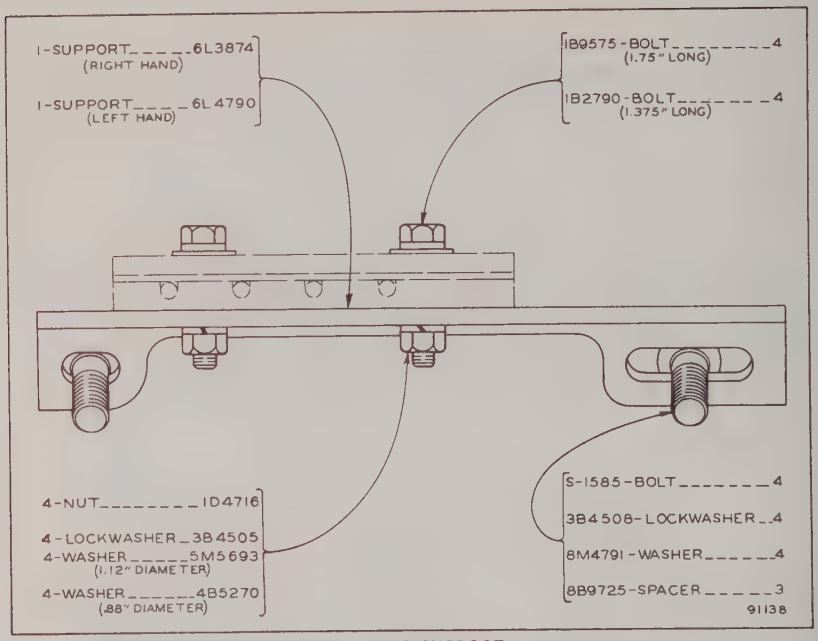

FUEL LINE SUPPORT
Effective with Serial No. 68B675
FOR USE WITH 5L4936 WOODWARD GOVERNOR GROUP SHOWN ON PAGE 167

5L8039 For use with 1200 R.P.M. to 1250 R.P.M.

Consists of:

2	4F2551	Spacer—.017" Thick
1	4F2552	Spring—.072" Thick

5L5779 For use with 1250 R.P.M. to 1300 R.P.M.
Effective with Serial No. 68B675

Consists of:

1	4F2552	Spring—.072" Thick
1	5M1886	Spacer—.022" Thick

TORQUE SPRING GROUPS
Only separate parts serviced

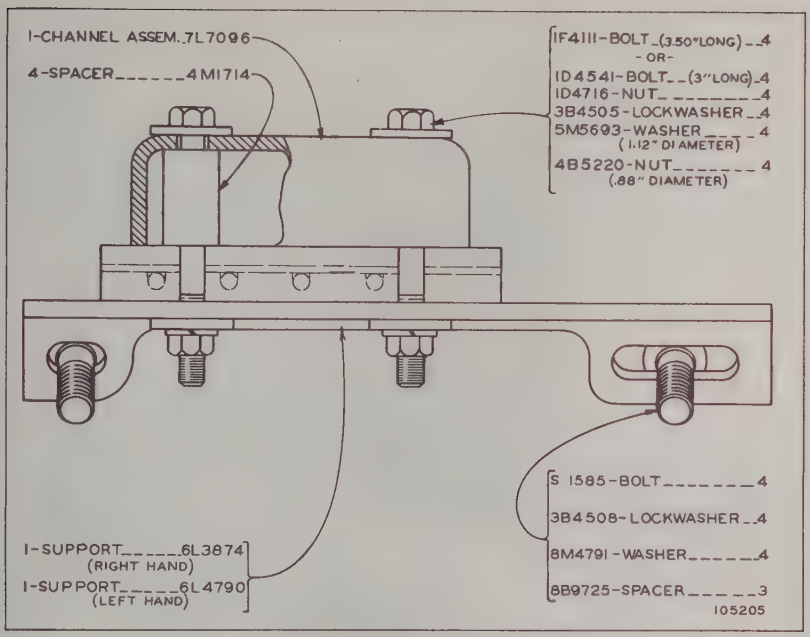

FUEL LINE SUPPORT—Type 2
Effective with Serial No. 68B675
For use with 5L4936 Woodward Governor Group
shown on Pages 166B and 167

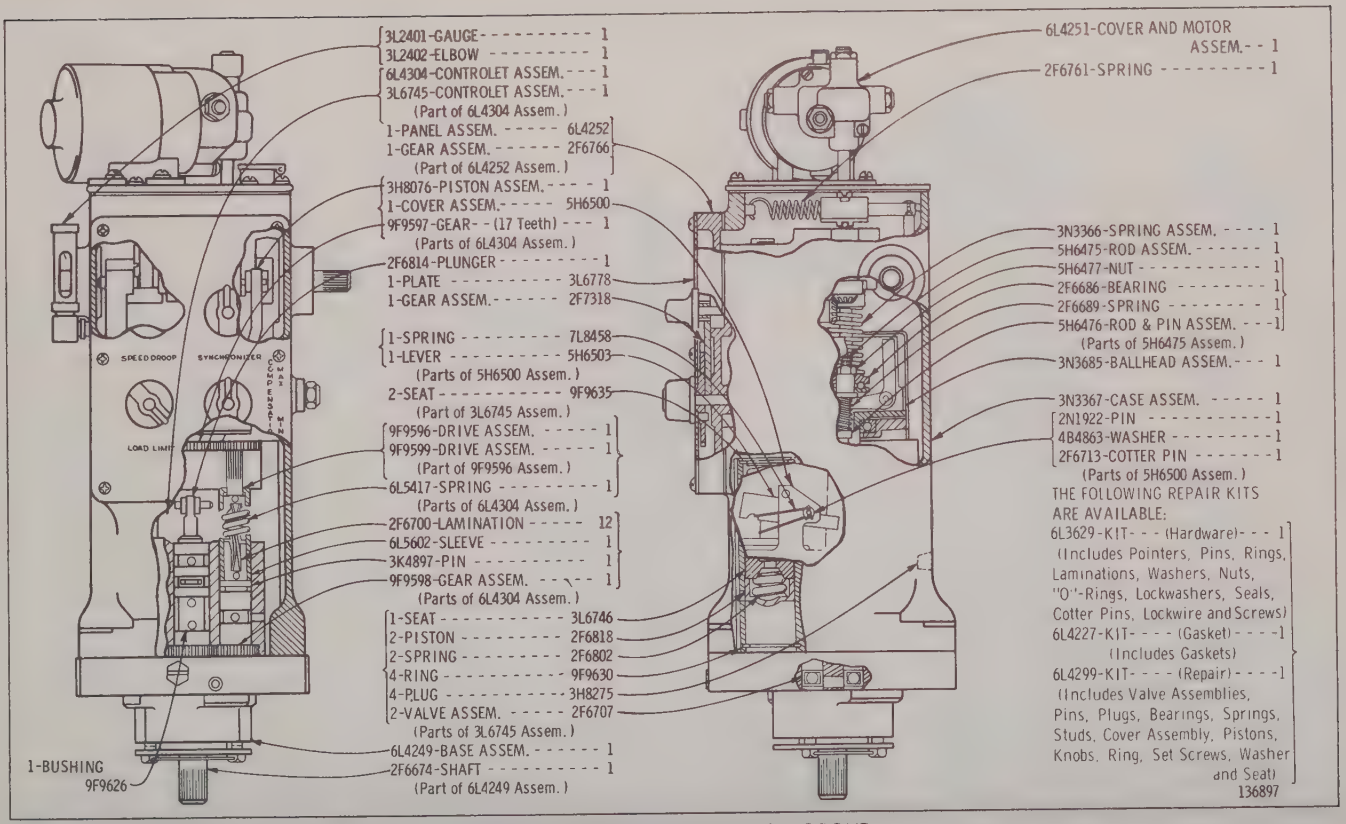

8L8919 WOODWARD GOVERNOR GROUP

Part of 5L4936 Woodward Governor Group shown on Page 167

6L4246 WOODWARD GOVERNOR ASSEMBLY

Part of 5L4936 Woodward Governor Group shown on Page 167

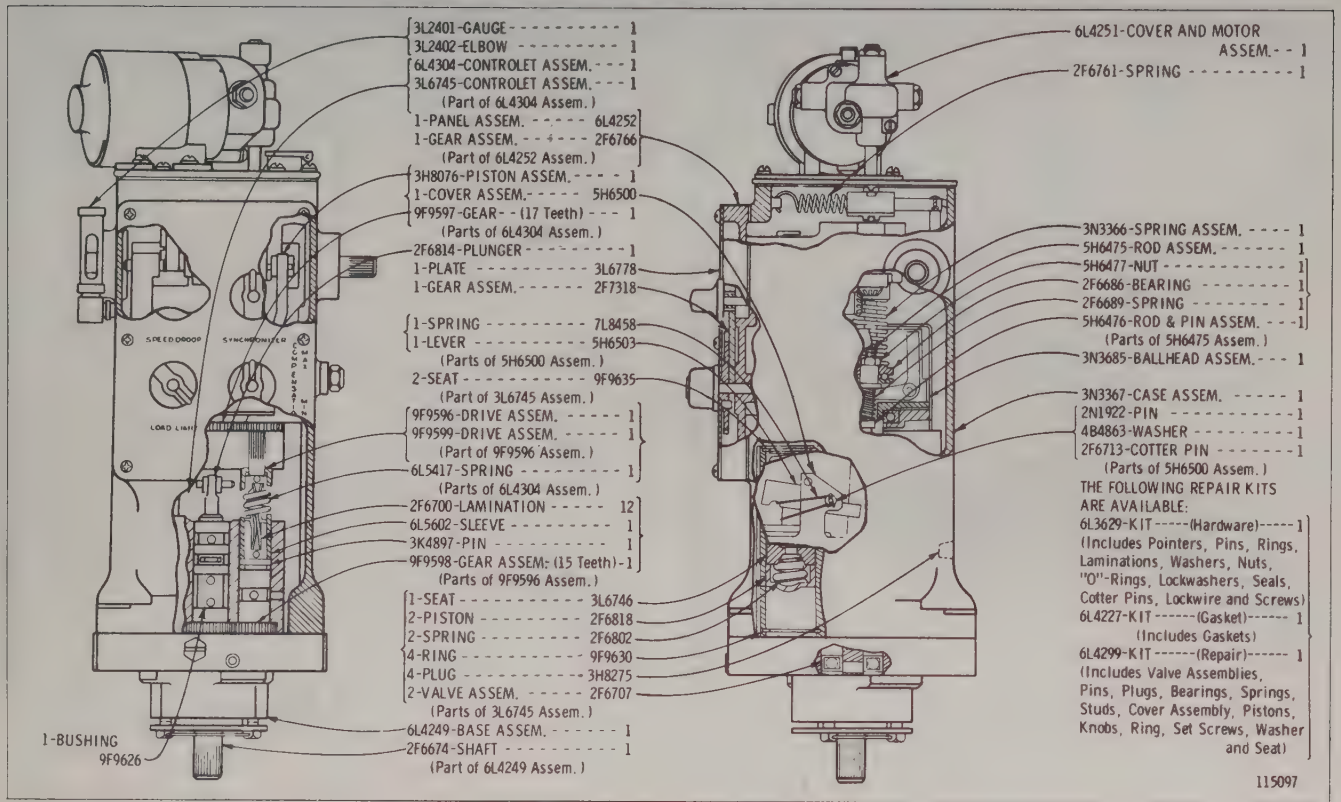

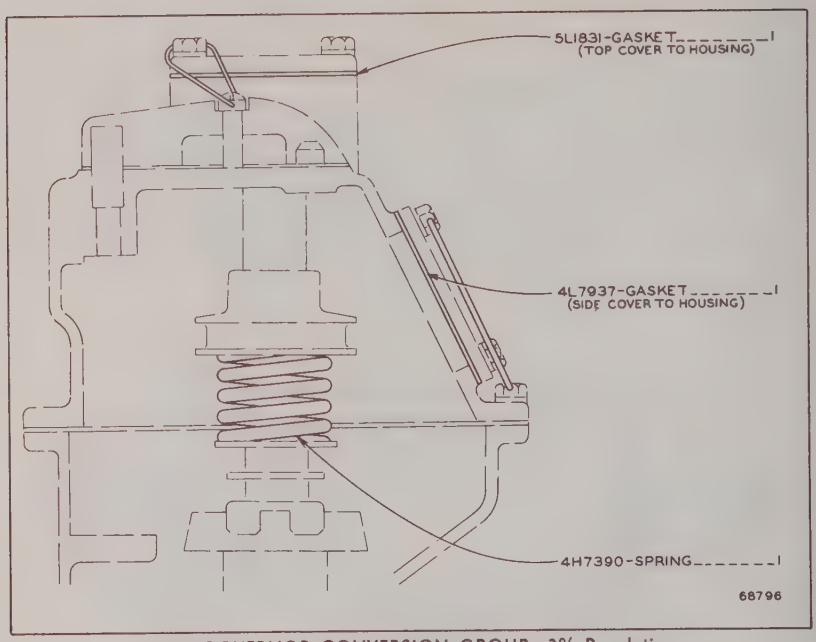

5L6945 GOVERNOR CONVERSION GROUP—3% Regulation
Effective with Serial No. 68B675

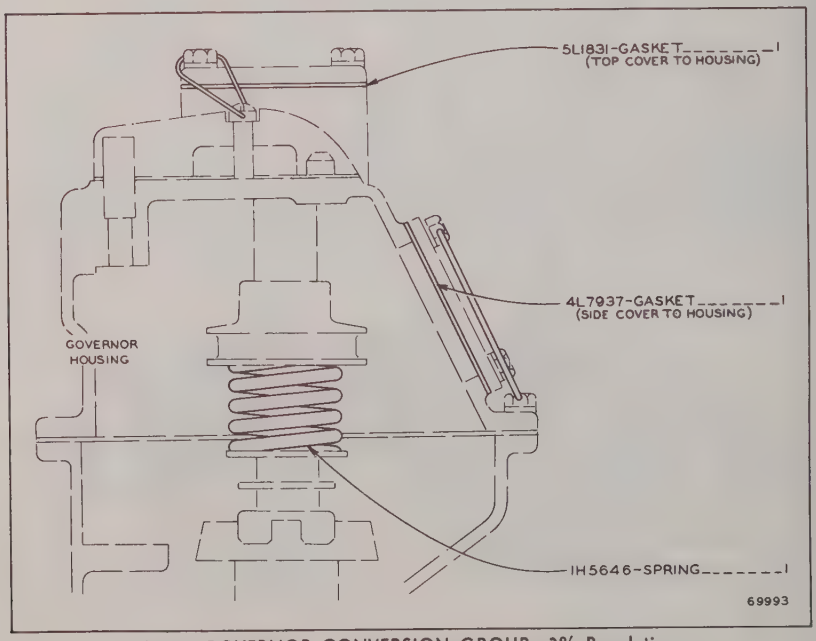

5L7472 GOVERNOR CONVERSION GROUP—3% Regulation
Effective with Serial No. 68B675

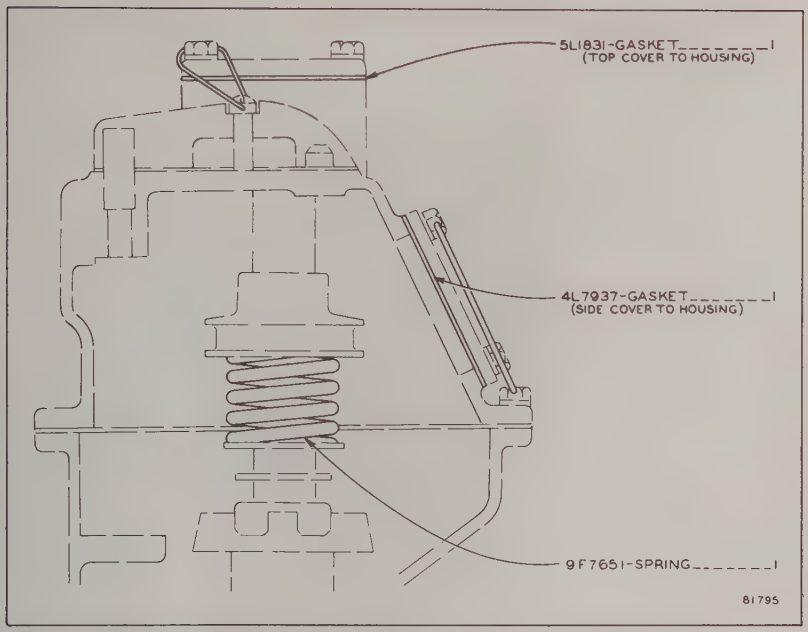

5L7473 GOVERNOR CONVERSION GROUP—10% Regulation
Effective with Serial No. 68B675

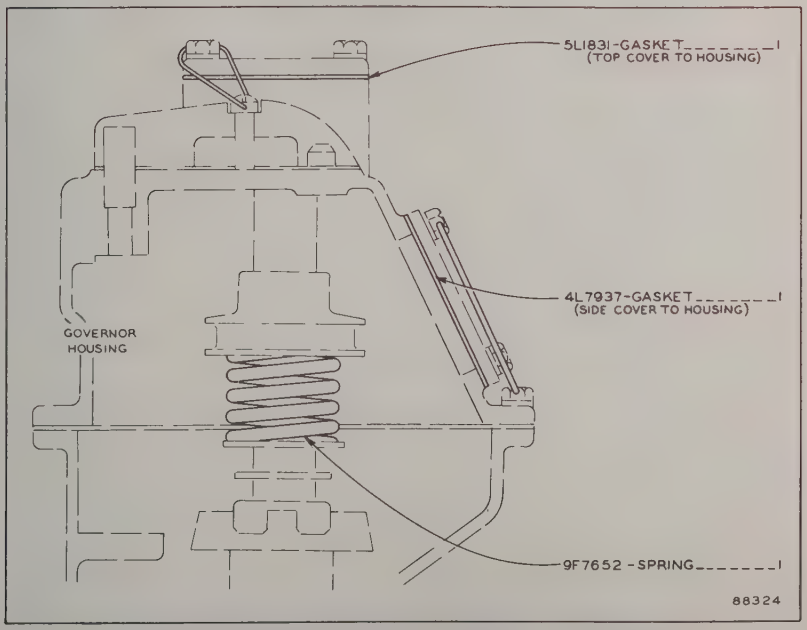

6L4913 GOVERNOR CONVERSION GROUP—10% Regulation
Effective with Serial No. 68B675

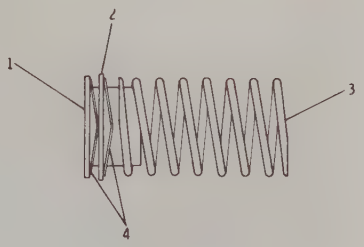

	REF. NO.	PART NUMBER	DESCRIPTION	QTY
C	1	6N3504	SEAT	1
	2	2P9556	WASHER	1
	3	4N6681	SPRING-------(Governor)-------	1
	4	2N828	WASHER------(spring)----------	2

C INDICATES CHANGE

153423

4N6685 GOVERNOR SPRING CONVERSION GROUP
Serial No. 68B824—Up
Reduces tendency to stall when loads are applied at low idle

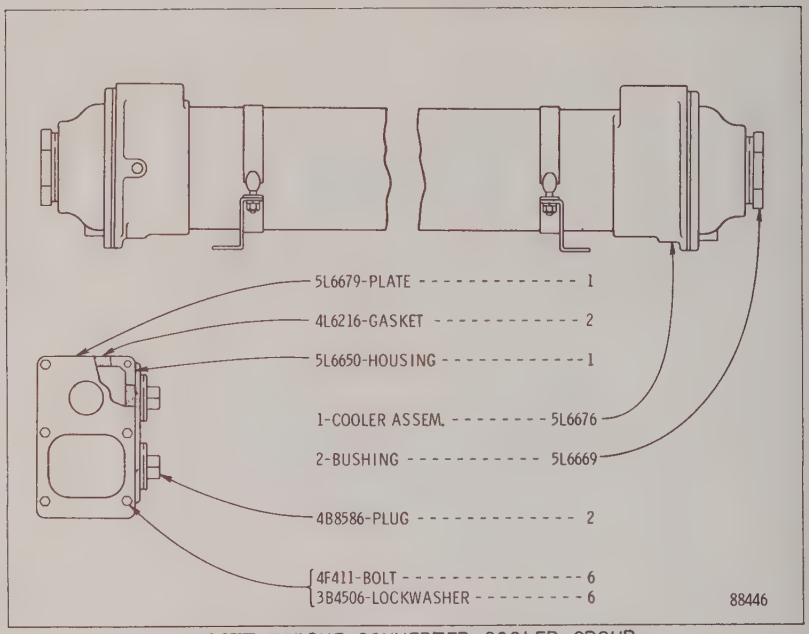

5L6677 TORQUE CONVERTER COOLER GROUP
SERIAL No. 68B675 TO 68B1063 INCLUSIVE

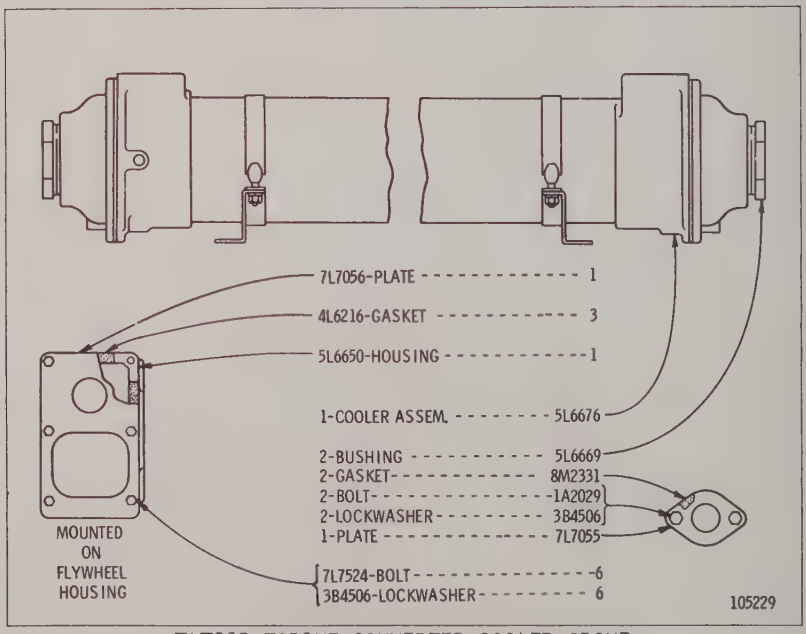

7L7063 TORQUE CONVERTER COOLER GROUP
EFFECTIVE WITH SERIAL No. 68B1064

7S8300 TURBOCHARGER ASSEMBLY

Serial No. 76B1—Up

Note: 4N5279 Bearing Group containing 1—grooved and 1—Plain for .010" oversize is available

REF. NO.	PART NUMBER	DESCRIPTION	QTY
1	▲5S2794	HOUSING--------(Turbine)--------	1
2	▲7M9917	CLAMP----------	1

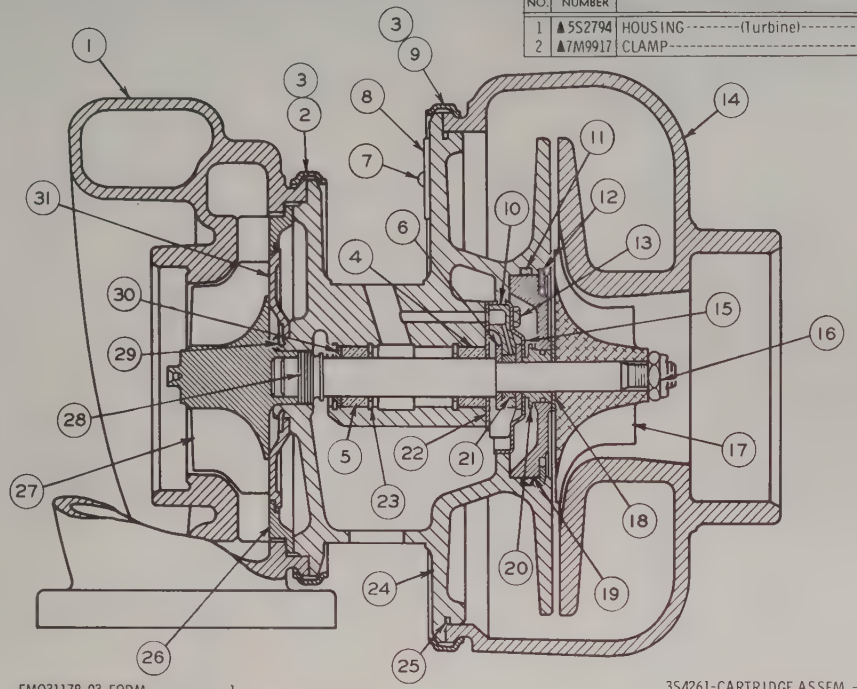

REF. NO.	PART NUMBER	DESCRIPTION	QTY
3	▲7M9918	NUT----------	2
	3S5854	BEARING GROUP----------	1
		Consisting of:	
4	Not Serv.	BEARING-------(Grooved)-------	1
5	Not Serv.	BEARING--------(Plain)--------	1
	FE036070-01	FORM----------	1
		(Bearing Group Installation)	
6	7M9907	RING----------	2
7	▲8H3710	SCREW----------	2
	8H3710	SCREW----------	1
8	▲7M9920	PLATE----------(Name)---------	1
	2S1507	PLATE------(Name-Cartridge)-----	1
9	▲7M9916	CLAMP----------	1
10	2S1306	BEARING----------	1
11	3S1427	SEAL----------	1
12	2S1307	RING----------	1
13	7M9910	BOLT----------	3
	7M9919	PLATE----------(Lock)---------	3
14	▲3S4256	COVER-------(Compressor)-------	1
15	2S1308	DEFLECTOR- ----------	1
16	4M8012	NUT----------	1
17	9M495	WHEEL----------	1
18	8M7167	SHIM--------(.003 ' Thick)-------	1
	8M7168	SHIM--------(.005 ' Thick)-------	1
	8M7169	SHIM--------(.010" Thick)-------	1
19	2S1305	INSERT- ----------	1
20	7M9908	SLEEVE----------	1
21	7M9923	SPACER- ----------	1
22	2S1310	SPACER--- ----------	1
23	7M7611	RING ----------	3
24	1S5372	HOUSING----------	1
25	9M9545	SEAL----------	1
26	▲5S9603	NOZZLE----------	1
27	9M491	WHEEL AND SHAFT ASSEM. --------	1
28	4M8013	RING- ----------	4
29	4M6990	RING----------	1
30	1S3887	SLEEVE----------	1
31	1S2098	PLATE----------	1

FM031178-03-FORM----------1
(Turbocharger Installation Check List)

3S4261-CARTRIDGE ASSEM. -----1
(Consists of all Parts Except Those Marked ▲)

105222

9M3181 TURBOCHARGER ASSEMBLY—2 Assemblies Required

Effective with Serial No. 68B675

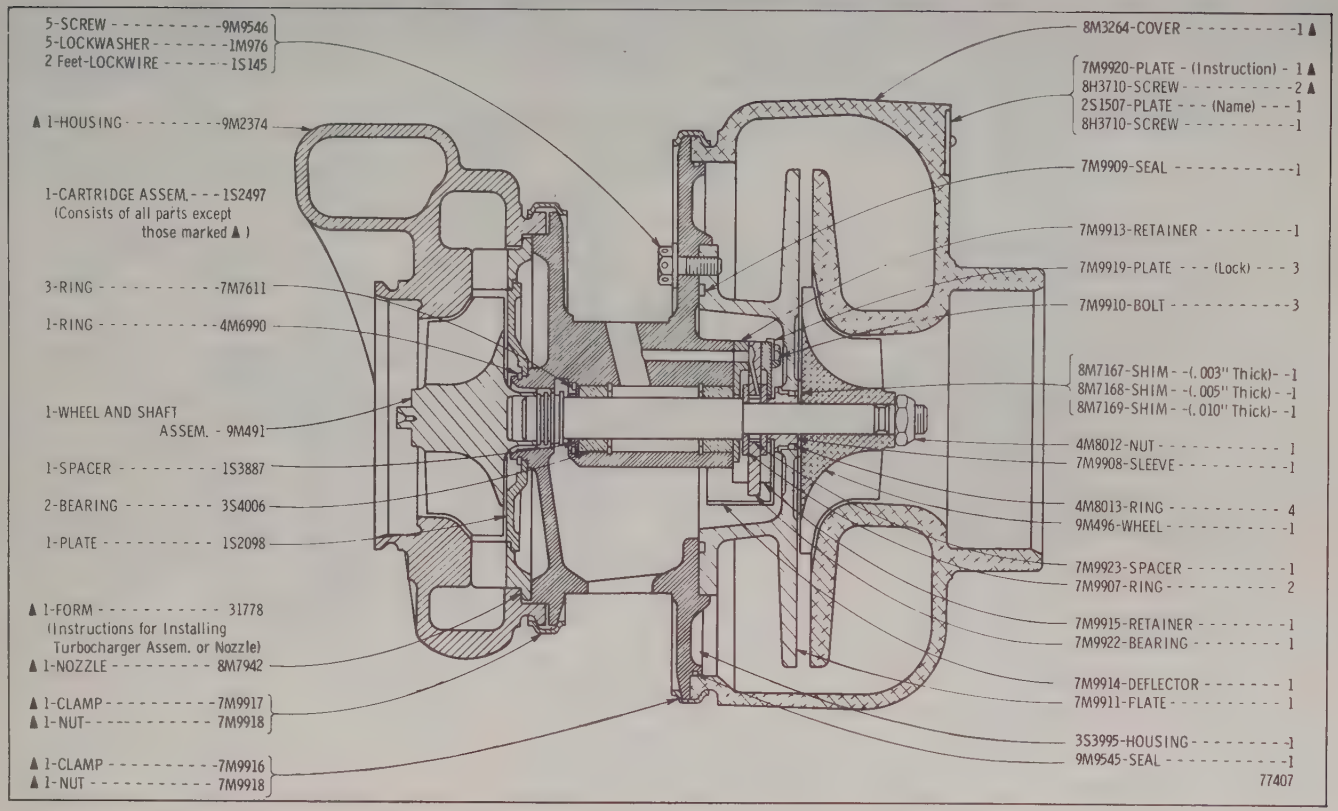

REF NO.	PART NUMBER	DESCRIPTION	QTY.
1	▲9M2374	HOUSING--------(Turbine)--------	1
2	▲7M9917	CLAMP----------	1

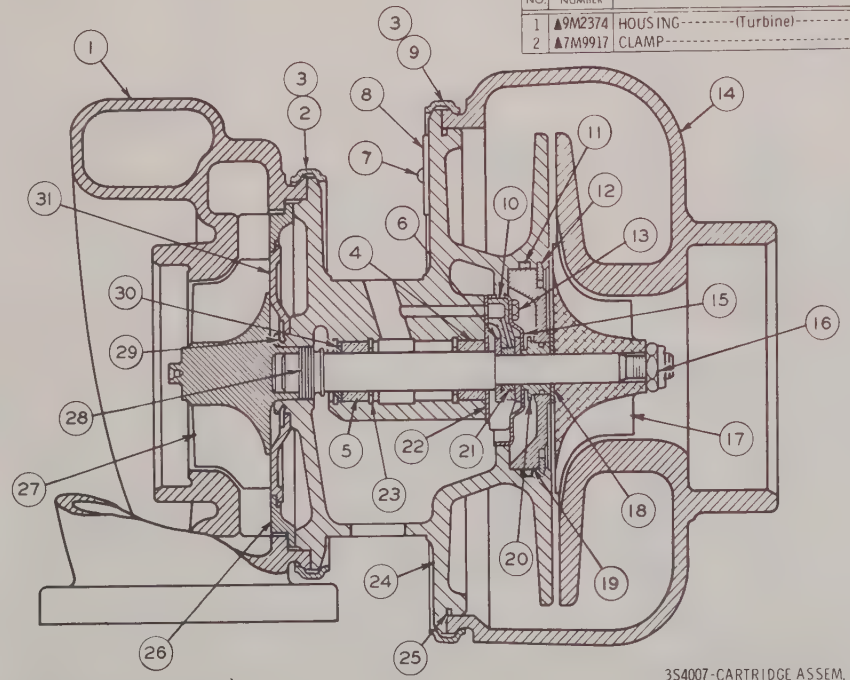

31778-FORM----------1
(Instructions for Installing Turbocharger Assem. or Turbocharger Nozzle)

3S4007-CARTRIDGE ASSEM. -----1
(Consists of all Parts Except Those Marked ▲)

REF NO.	PART NUMBER	DESCRIPTION	QTY.
3	▲7M9918	NUT----------	2
	3S5854	BEARING GROUP----------	1
		Consisting of:	
4	Not Serv.	BEARING-------(Grooved)-------	1
5	Not Serv.	BEARING--------(Plain)--------	1
	36070	FORM------ ----------	1
		(Bearing Group Installation)	
6	7M9907	RING--- ----------	2
7	▲8H3710	SCREW- ----------	1
	8H3710	SCREW-------- ----------	1
8	▲7M9920	PLATE--------- --(Name)----------	1
	2S1507	PLATE------(Name-Cartridge)------	1
9	▲7M9916	CLAMP ----------	1
10	2S1306	BEARING----------	1
11	3S1427	SEAL----------	1
12	2S1307	RING-- ----------	1
13	7M9910	BOLT - ----------	3
	7M9919	PLATE--------- --(Lock)---------	3
14	▲3S3994	COVER--------(Compressor)--------	1
15	2S1308	DEFLECTOR-- ----------	1
16	4M8012	NUT----------	1
17	9M496	WHEEL---------(Compressor)--------	1
18	8M7167	SHIM-- ------(.003" Thick)--------	1
	8M7168	SHIM---------(.005 " Thick)--------	1
	8M7169	SHIM-- ------(.010" Thick)--------	1
19	2S1305	INSERT----------	1
20	7M9908	SLEEVE----------	1
21	7M9923	SPACER------ ----------	1
22	2S1310	SPACER----------	1
23	7M7611	RING----------	3
24	1S5372	HOUSING----------	1
25	9M9545	SEAL----------	1
26	▲8M7942	NOZZLE----------	1
27	9M491	WHEEL AND SHAFT ASSEM. --------	1
28	4M8013	RING----------	4
29	4M6990	RING---------- ----------	1
30	1S3887	SLEEVE----------	1
31	1S2098	PLATE----------	1

79369

3S4441 TURBOCHARGER ASSEMBLY—2 Assemblies Required
Effective with Serial No. 68B675

7M9684 TURBOCHARGER ASSEMBLY—2 Assemblies Required

Effective with Serial No. 68B675

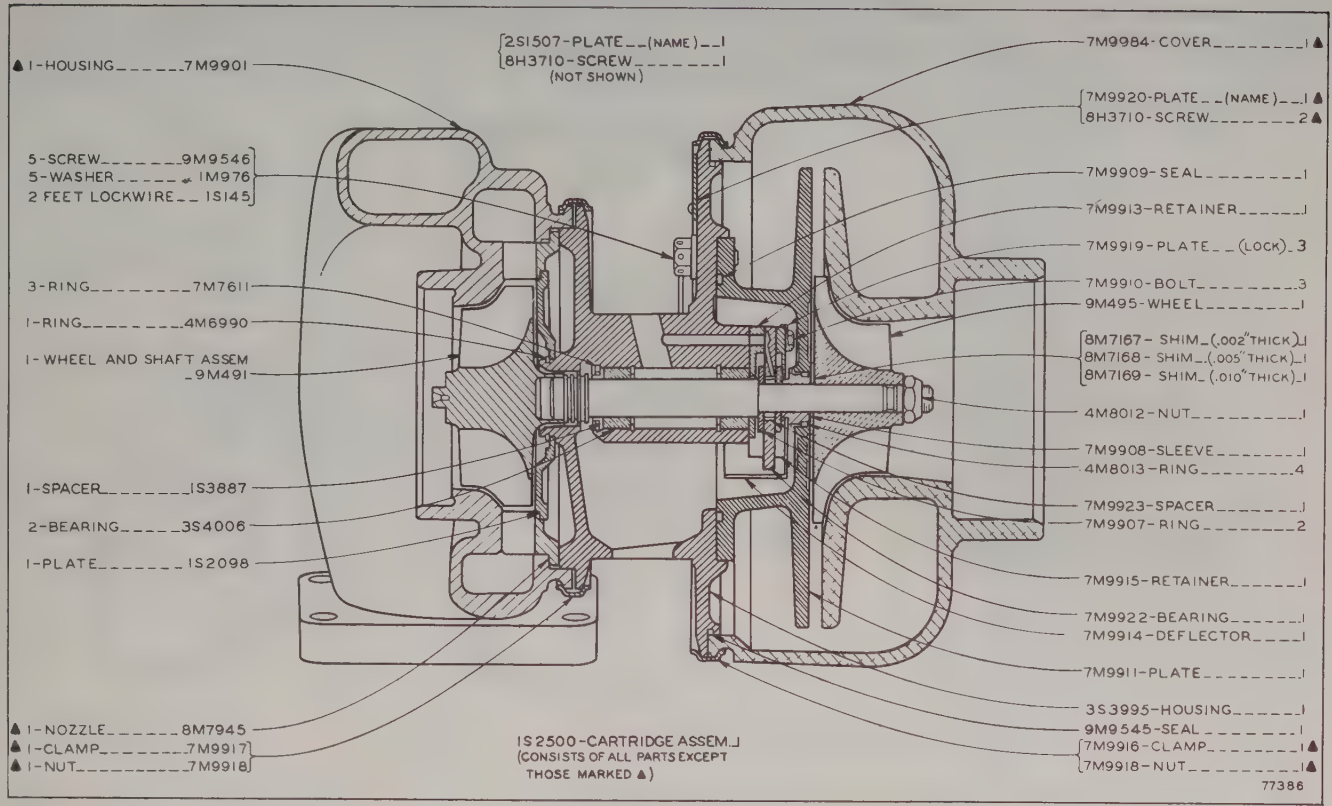

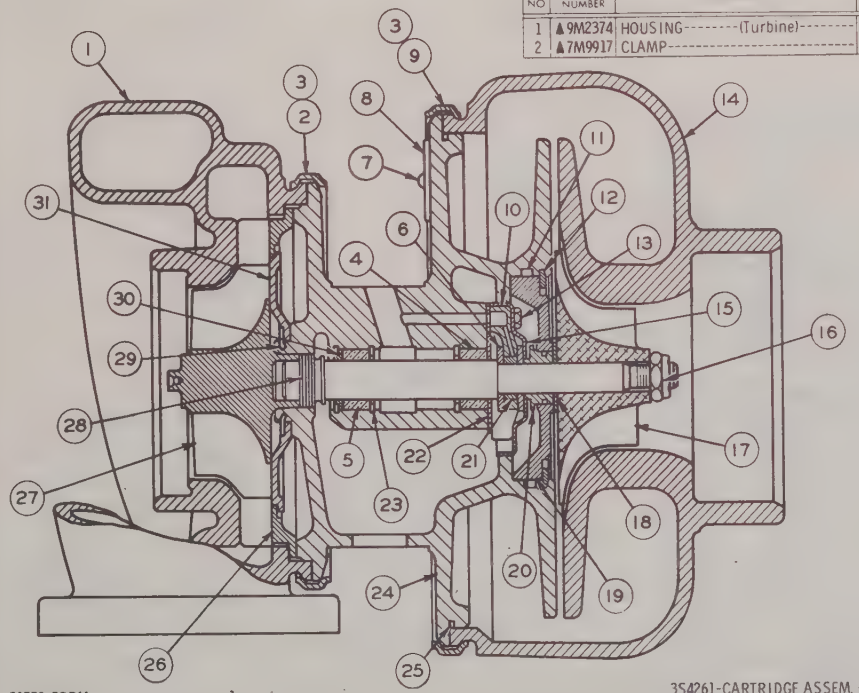

REF NO	PART NUMBER	DESCRIPTION	QTY.
1	▲9M2374	HOUSING--------(Turbine)--------	1
2	▲7M9917	CLAMP----------	1

REF NO	PART NUMBER	DESCRIPTION	QTY
3	▲7M9918	NUT----------	2
	3S5854	BEARING GROUP----------	1
		Consisting of:	
4	Not Serv.	BEARING-------(Grooved)--------	1
5	Not Serv.	BEARING-------(Plain)--------	1
	36070	FORM----------	1
		(Bearing Group Installation)	
6	7M9907	RING----------	2
7	▲8H3710	SCREW----------	2
	8H3710	SCREW----------	1
8	▲7M9920	PLATE----------(Name)----------	1
	2S1507	PLATE------(Name-Cartridge)------	1
9	▲7M9916	CLAMP----------	1
10	2S1306	BEARING----------	1
11	3S1427	SEAL----------	1
12	2S1307	RING----------	1
13	7M9910	BOLT----------	3
	7M9919	PLATE----------(Lock)----------	3
14	▲3S4256	COVER-------(Compressor)--------	1
15	2S1308	DEFLECTOR----------	1
16	4M8012	NUT----------	1
17	9M495	WHEEL----------	1
18	8M7167	SHIM--------(.003" Thick)--------	1
	8M7168	SHIM--------(.005" Thick)--------	1
	8M7169	SHIM--------(.010" Thick)--------	1
19	2S1305	INSERT----------	1
20	7M9908	SLEEVE----------	1
21	7M9923	SPACER----------	1
22	2S1310	SPACER----------	1
23	7M7611	RING----------	3
24	1S5372	HOUSING----------	1
25	9M9545	SEAL----------	1
26	▲8M7945	NOZZLE----------	1
27	9M491	WHEEL AND SHAFT ASSEM.--------	1
28	4M8013	RING----------	4
29	4M6990	RING----------	1
30	1S3887	SLEEVE----------	1
31	1S2098	PLATE----------	1

97516

31778-FORM----------1
(Instructions for Installing Turbocharger Assem. or Turbocharger Nozzle)

3S4261-CARTRIDGE ASSEM. -----1
(Consists of all Parts Except Those Marked ▲)

3S4431 TURBOCHARGER ASSEMBLY—2 Required
Serial No. 68B675—Up
Note: 4N5279 Bearing Group containing 1—Grooved and 1—Plain for .010" oversize is available

3S4420 TURBOCHARGER ASSEMBLY—2 Assemblies Required

Effective with Serial No. 68B675

REF. NO.	PART NUMBER	DESCRIPTION	QTY.
1	▲9M2374	HOUSING--------(Turbine)--------	1
2	▲7M9917	CLAMP----------	1

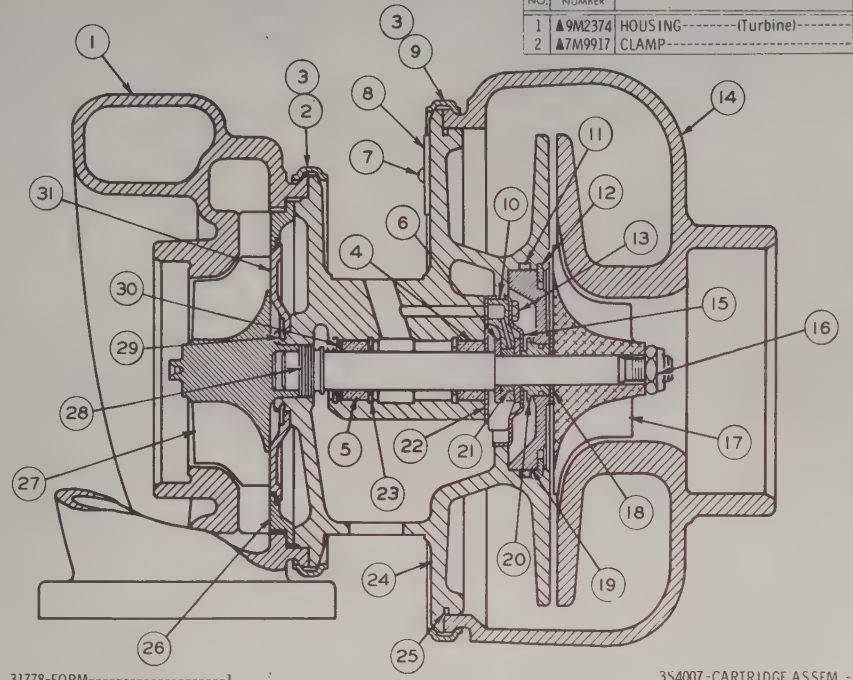

REF NO.	PART NUMBER	DESCRIPTION	QTY
3	▲7M9918	NUT----------	2
	3S5854	BEARING GROUP----------	1
		Consisting of:	
4	Not Serv.	BEARING-------(Grooved)-------	1
5	Not Serv.	BEARING--------(Plain)--------	1
	36070	FORM----------	1
		(Bearing Group Installation)	
6	7M9907	RING----------	2
7	▲8H3710	SCREW----------	1
	8H3710	SCREW----------	1
8	▲7M9920	PLATE----------(Name)--------	1
	2S1507	PLATE------(Name-Cartridge)------	1
9	▲7M9916	CLAMP----------	1
10	2S1306	BEARING----------	1
11	3S1427	SEAL----------	1
12	2S1307	RING----------	1
13	7M9910	BOLT----------	3
	7M9919	PLATE----------(Lock)----------	3
14	▲3S3994	COVER-------(Compressor)-------	1
15	2S1308	DEFLECTOR----------	1
16	4M8012	NUT----------	1
17	9M496	WHEEL--------(Compressor)-------	1
18	8M7167	SHIM--------(.003" Thick)--------	1
	8M7168	SHIM--------(.005 " Thick)--------	1
	8M7169	SHIM--------(.010" Thick)--------	1
19	2S1305	INSERT----------	1
20	7M9908	SLEEVE----------	1
21	7M9923	SPACER----------	1
22	2S1310	SPACER----------	1
23	7M7611	RING----------	3
24	1S5372	HOUSING----------	1
25	9M9545	SEAL----------	1
26	▲8M7940	NOZZLE----------	1
27	9M491	WHEEL AND SHAFT ASSEM. --------	1
28	4M8013	RING----------	4
29	4M6990	RING----------	1
30	1S3887	SLEEVE----------	1
31	1S2098	PLATE----------	1

31778-FORM----------1
(Instructions for Installing Turbocharger Assem. or Turbocharger Nozzle)

3S4007-CARTRIDGE ASSEM. -----1
(Consists of all Parts Except Those Marked ▲)

79370

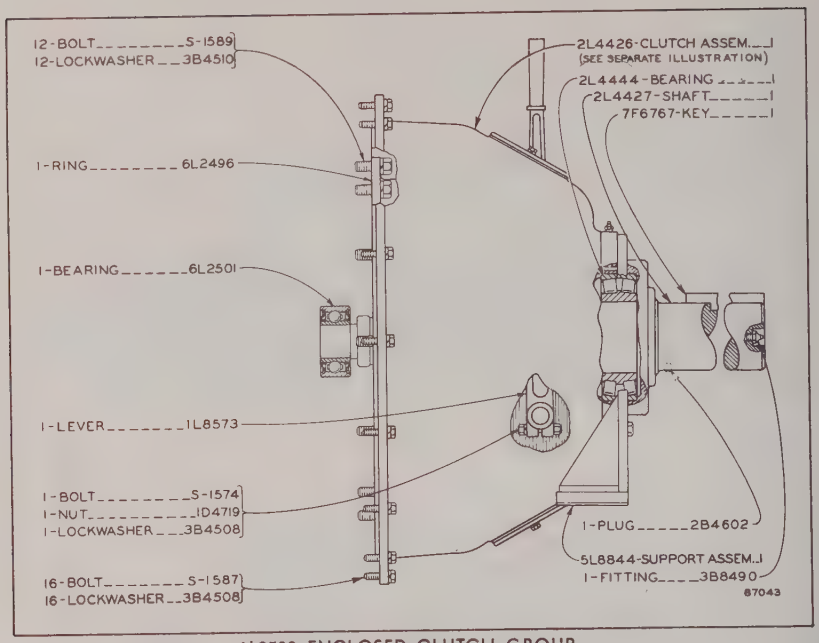

6L2522 ENCLOSED CLUTCH GROUP
Effective with Serial No. 68B675

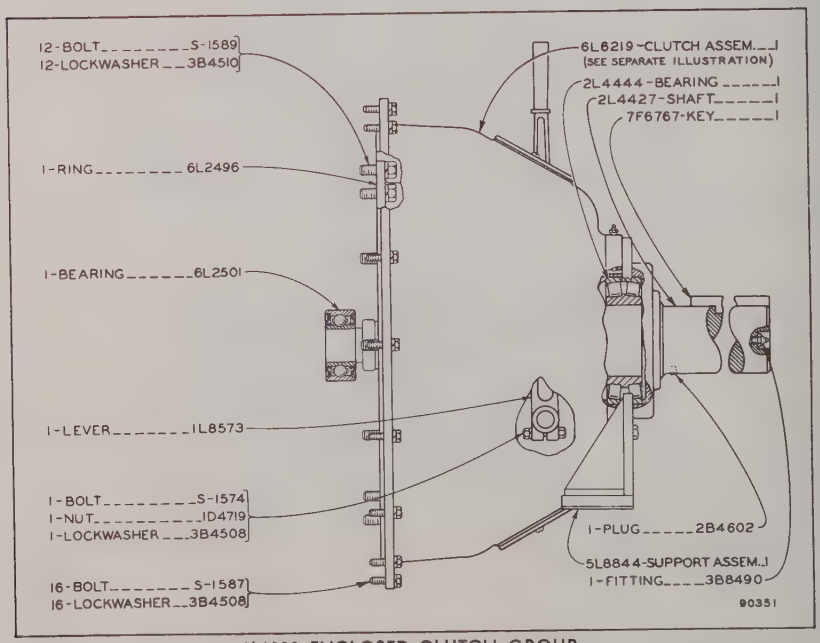

6L6220 ENCLOSED CLUTCH GROUP
Effective with Serial No. 76B1
6L6219 Clutch Assembly parts are shown on Page 180

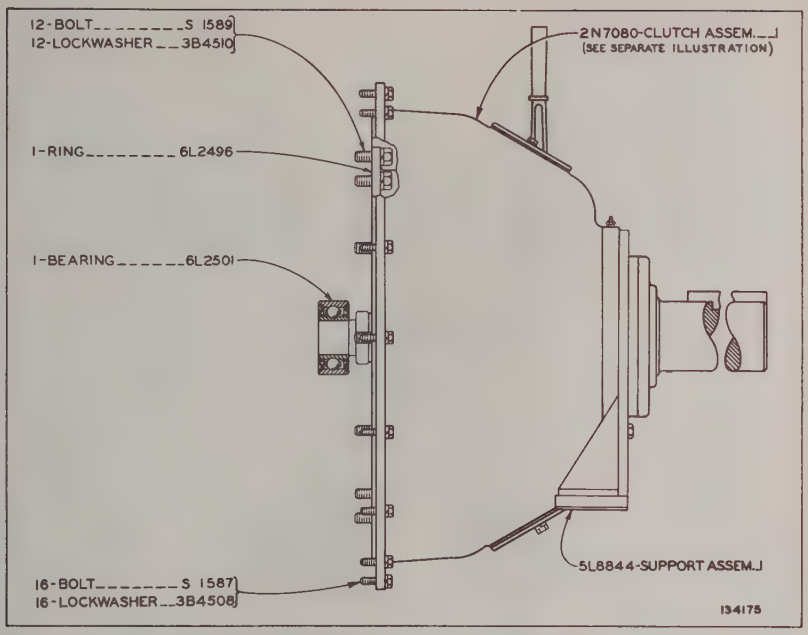

6L6220 ENCLOSED CLUTCH GROUP—Type 2
Effective with Serial No. 76B1. 2N7080 Clutch parts are shown on Page 178B. Provides 1810 H.P. for light duty, 1343 H.P. for normal duty and 875 H.P. for heavy duty

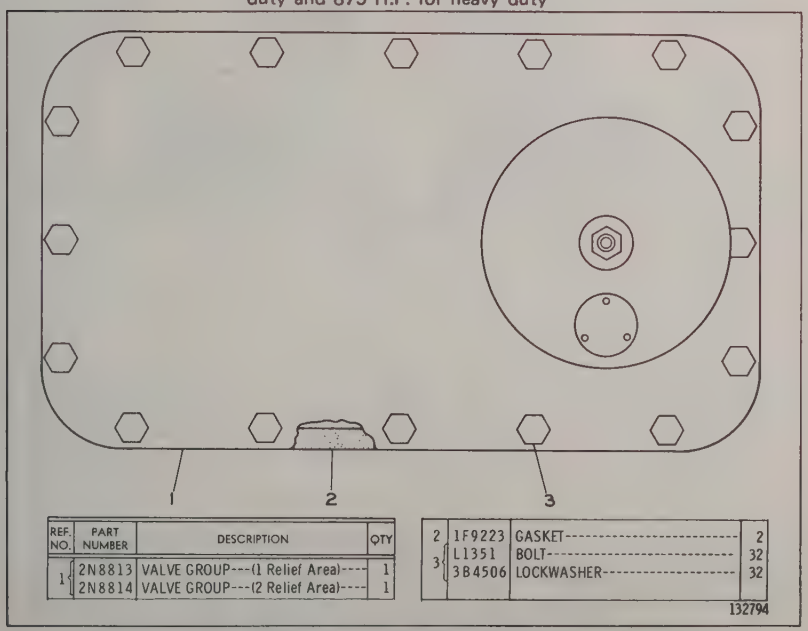

REF. NO.	PART NUMBER	DESCRIPTION	QTY
1	2N8813	VALVE GROUP---(1 Relief Area)----	1
	2N8814	VALVE GROUP---(2 Relief Area)----	1

2	1F9223	GASKET----------	2
3	L1351	BOLT----------	32
	3B4506	LOCKWASHER----------	32

2N8816 CRANKCASE EXPLOSION RELIEF VALVE ARRANGEMENT
Effective with Serial No. 68B675

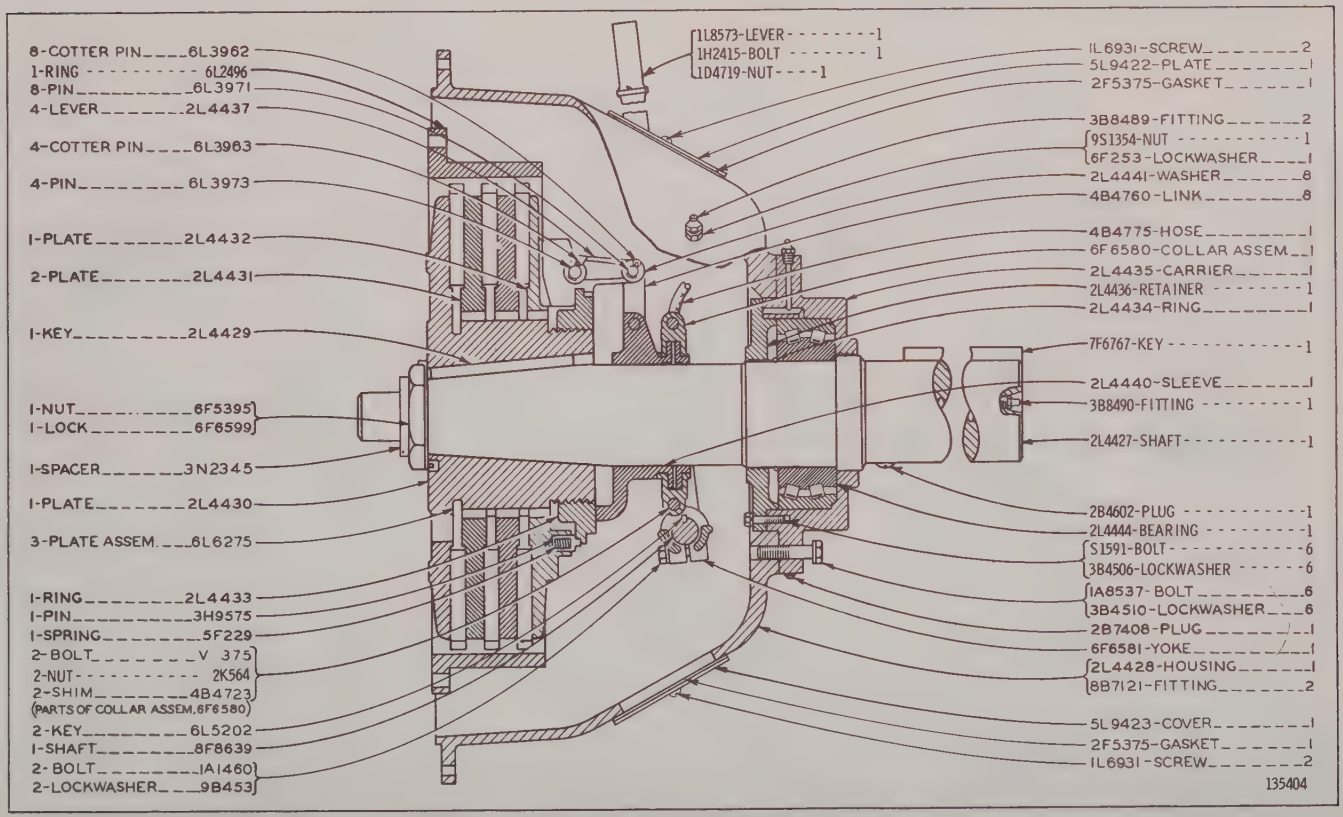

2N7080 CLUTCH ASSEMBLY
Specification No. 33599
Part of 6L6220 Enclosed Clutch Group shown on Page 178A

2L4426 CLUTCH ASSEMBLY

Specification No. 28142

Part of 6L2522 Enclosed Clutch Group

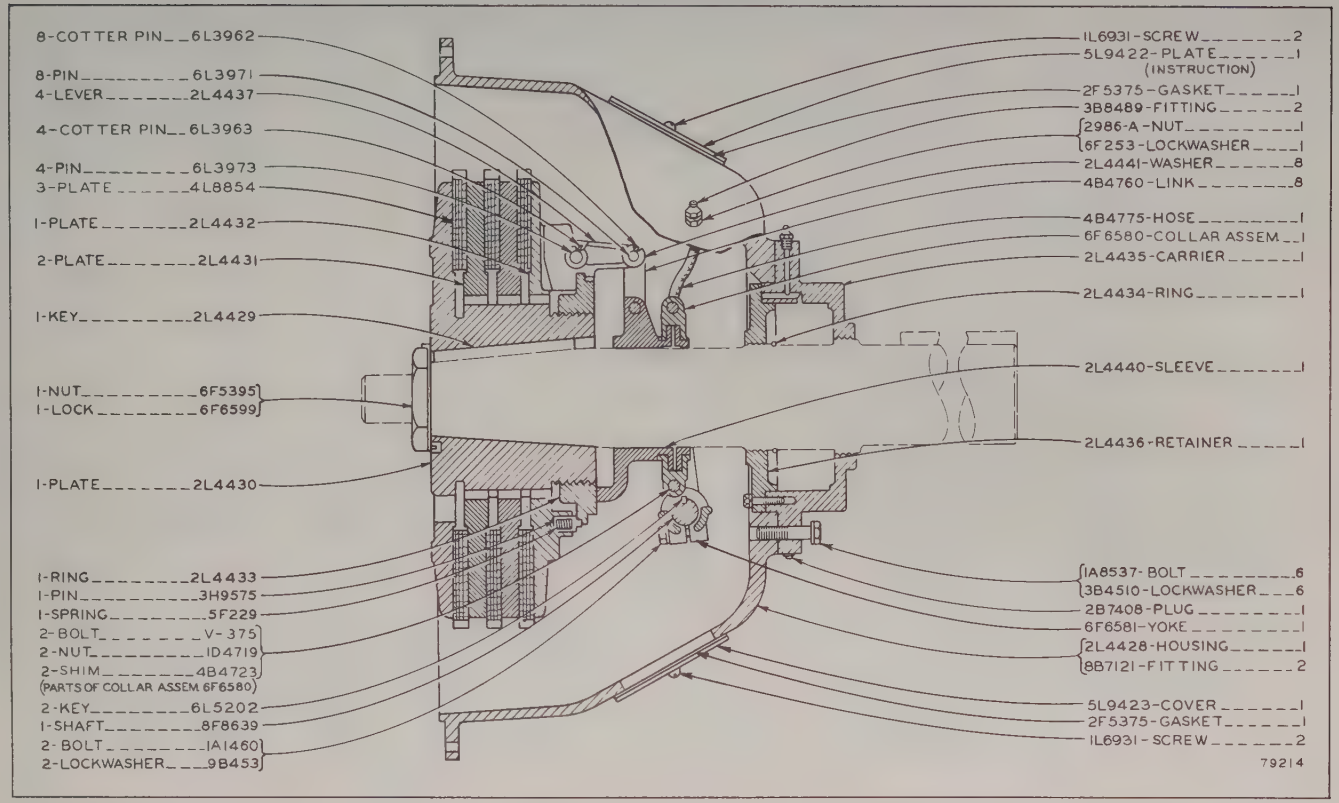

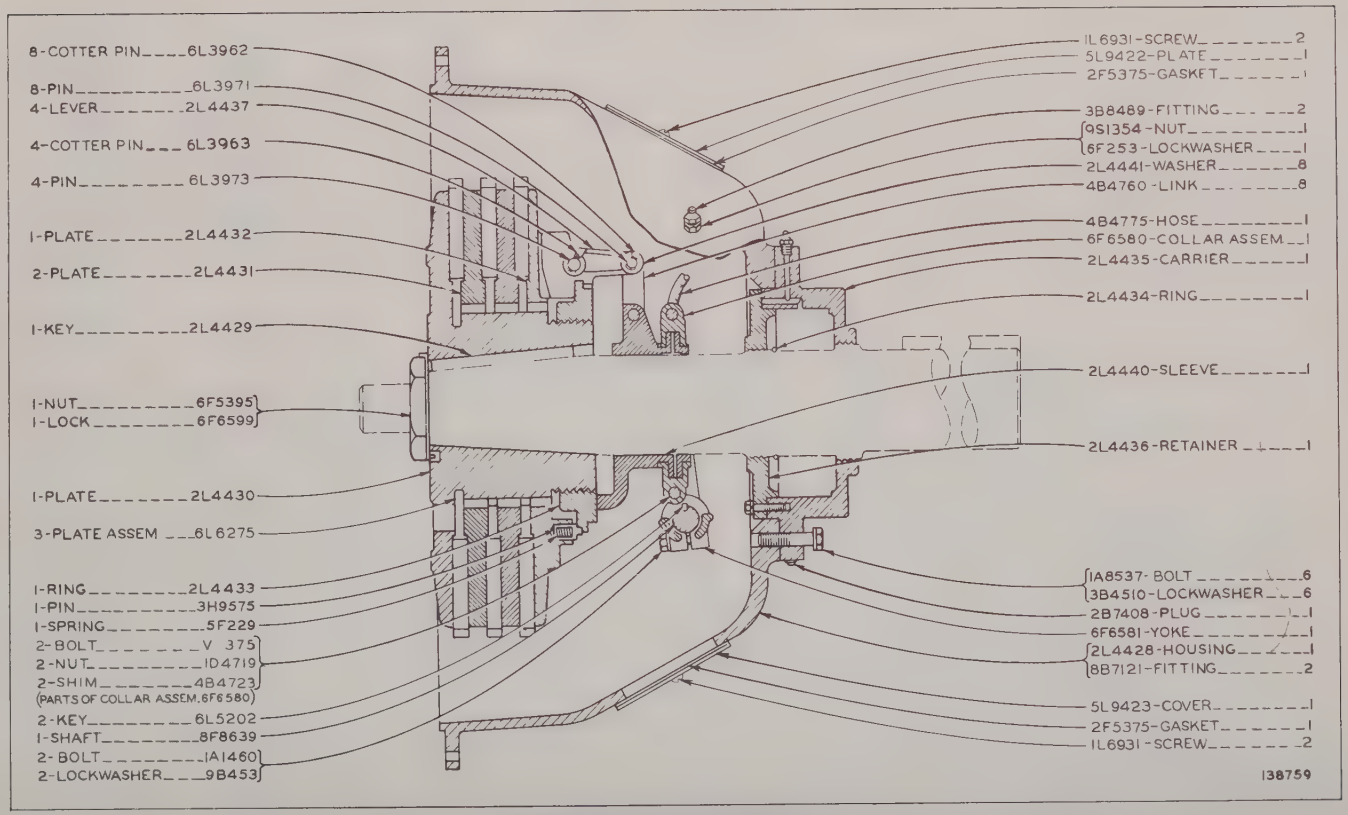

6L6219 CLUTCH ASSEMBLY

Specification No. 30710. Only separate parts serviced. When complete Assembly is required order 2N7080 shown on Page 178B. Part of 6L6220 Enclosed Clutch Group shown on Page 178

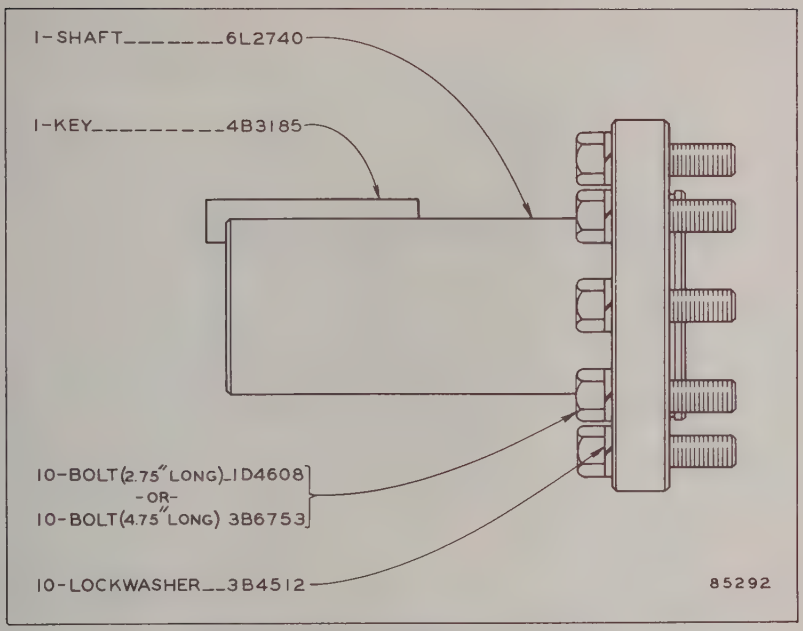

6L2690 STUB SHAFT GROUP—Front Mounted

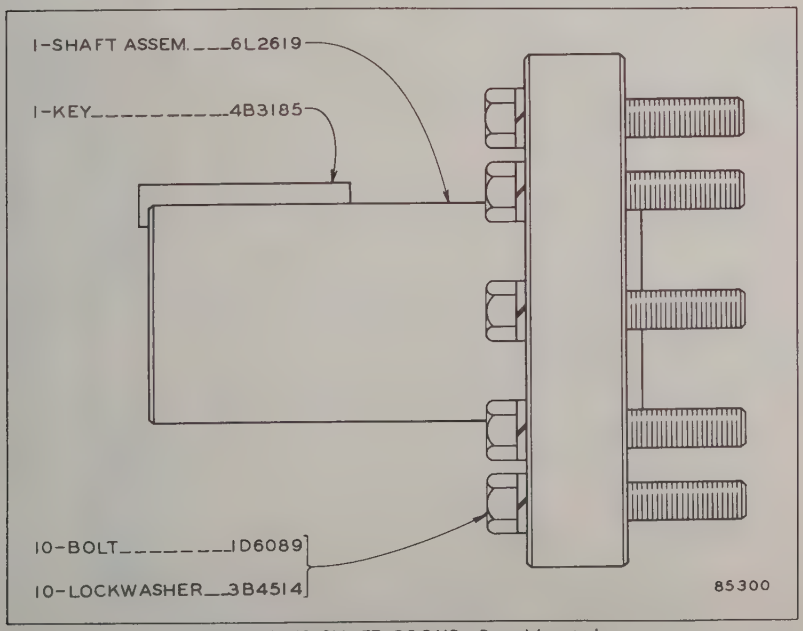

6L2709 STUB SHAFT GROUP—Rear Mounted

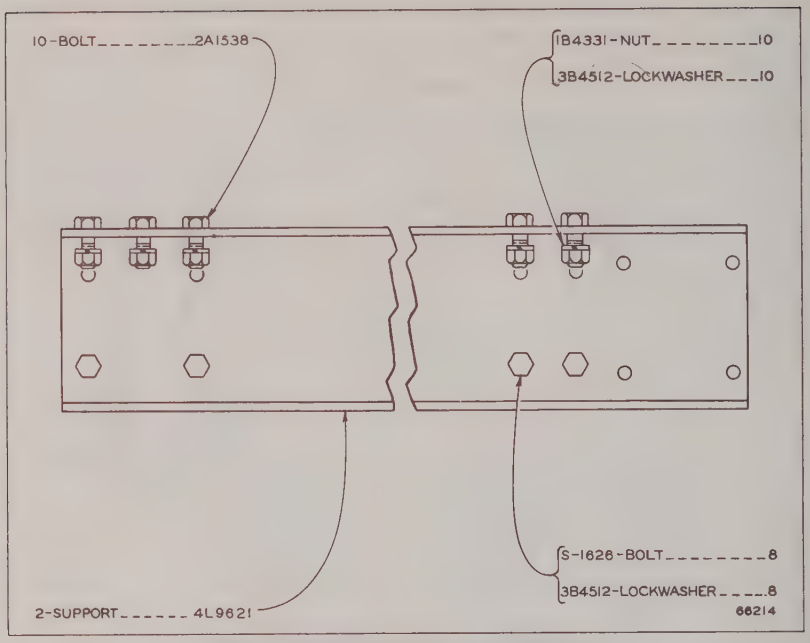

4L9622 ENGINE SUPPORT RAILS GROUP

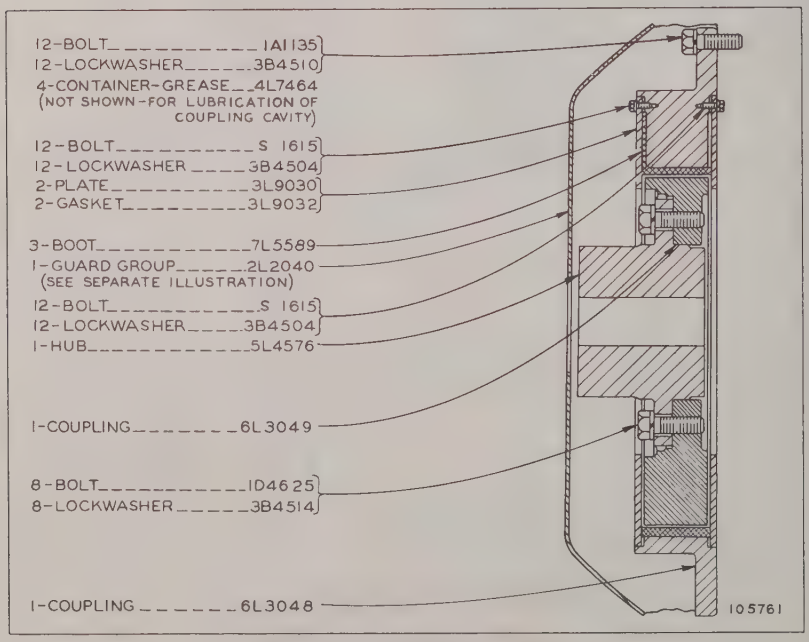

5L3395 FLEXIBLE COUPLING GROUP
Only separate parts serviced

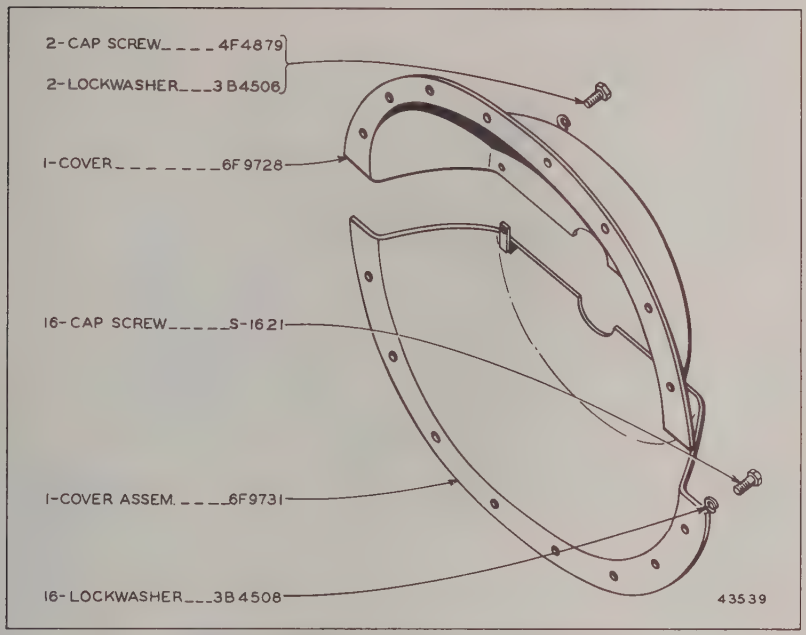

2L2040 GENERATOR COUPLING GUARD GROUP
REPLACED BY 3N5765 SHOWN ON PAGE 183B
Part of 5L3395 Flexible Coupling Group shown on Page 182

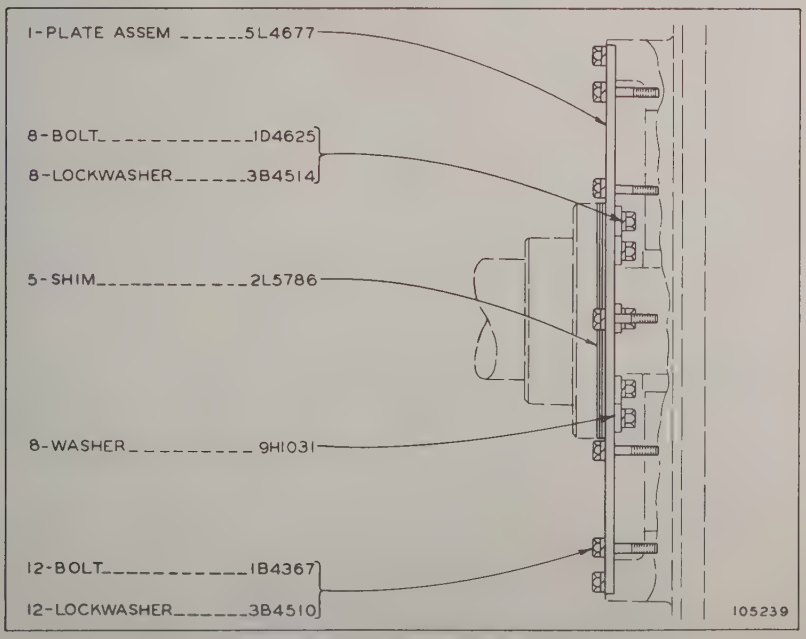

5L2487 GENERATOR COUPLING GROUP
Part of 5L2560 Generator Installation Arrangement shown on Page 184

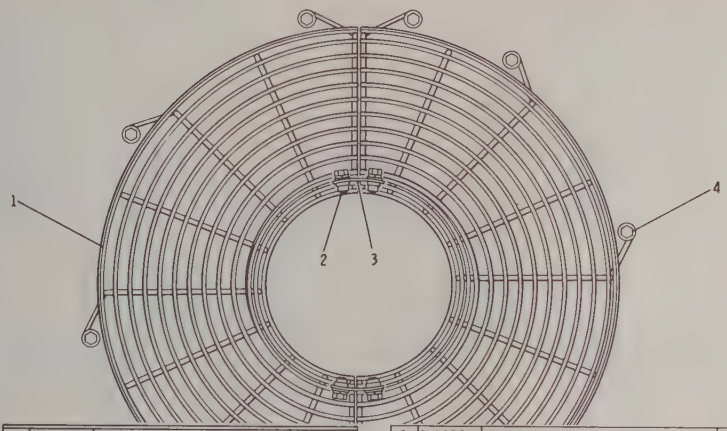

REF. NO.	PART NUMBER	DESCRIPTION	QTY
1	3N5709	GUARD ASSEM.	2
2	S1594	BOLT	4
	2N3385	NUT (clip)	4
	3B4506	LOCKWASHER	4
	4B5271	WASHER	4
3	1V623	PLATE	2
4	S1621	BOLT	10
	3B4508	LOCKWASHER	10
	4B4280	WASHER	10

153626

3N5765 FLYWHEEL COUPLING GUARD GROUP

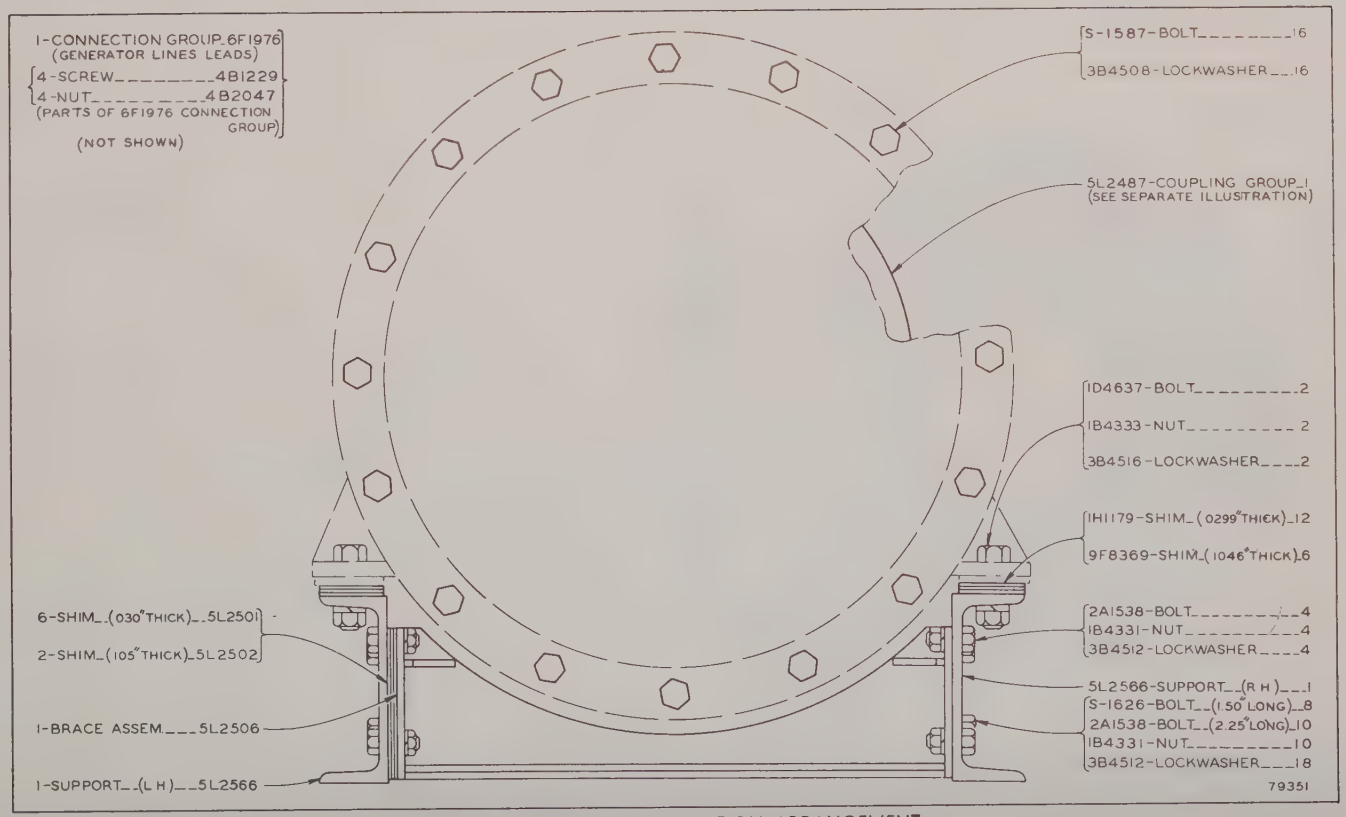

5L2560 GENERATOR INSTALLATION ARRANGEMENT

5L2487 Generator Coupling Group parts are shown on Page 183

5L2560 GENERATOR INSTALLATION ARRANGEMENT—Type 2

7L5479 Coupling parts are shown on Page 184D

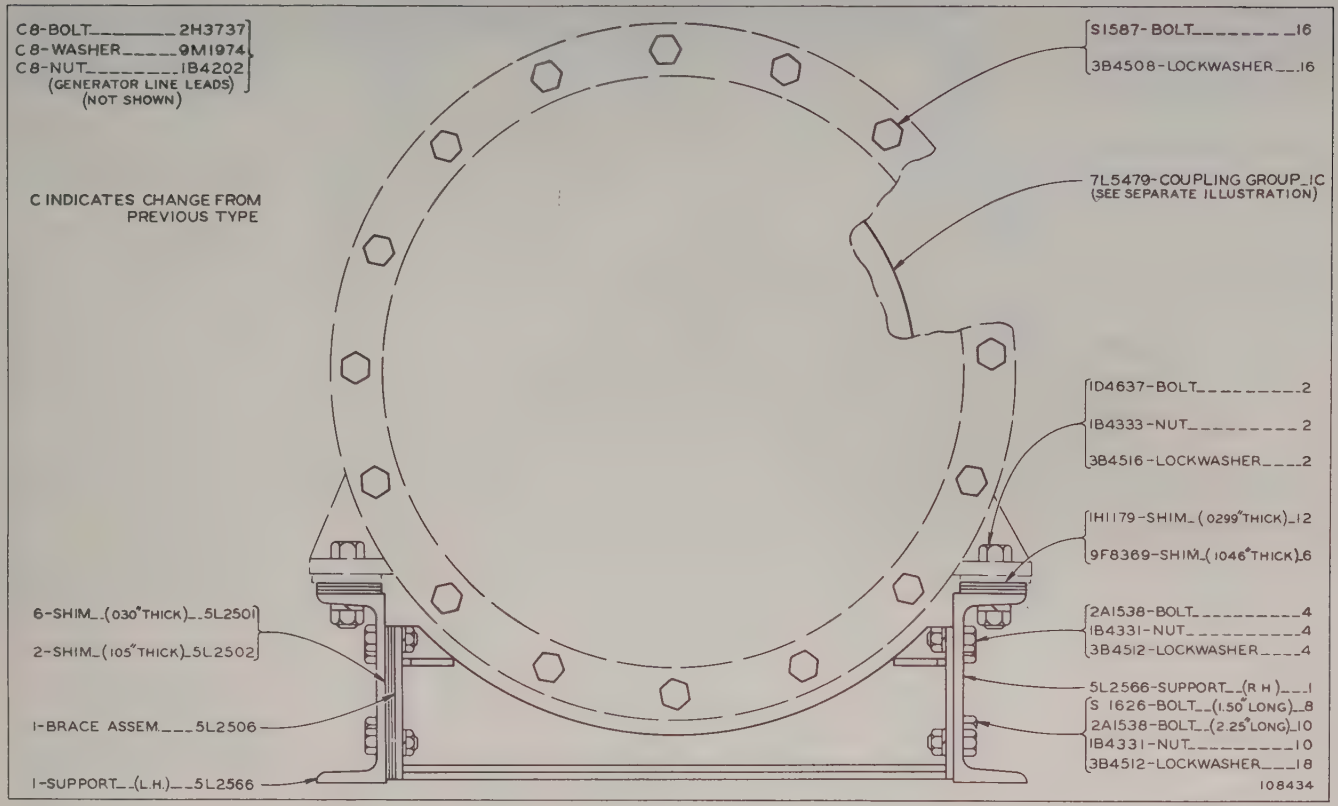

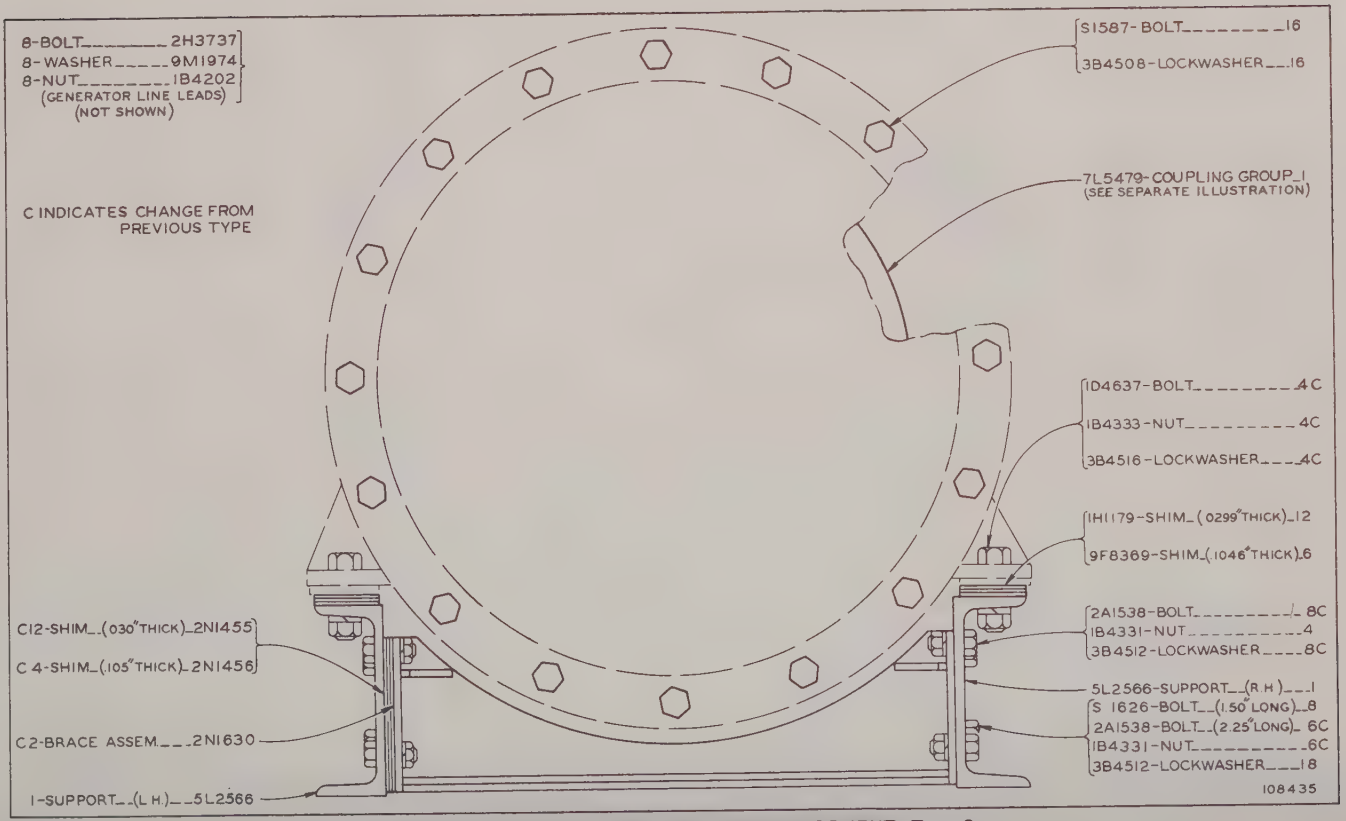

5L2560 GENERATOR INSTALLATION ARRANGEMENT—Type 3
7L5479 Coupling parts are shown on Page 184D

5L2560 GENERATOR INSTALLATION ARRANGEMENT—Type 4

7L5479 Coupling and 2N3912 Support Rails parts are shown on Page 184D

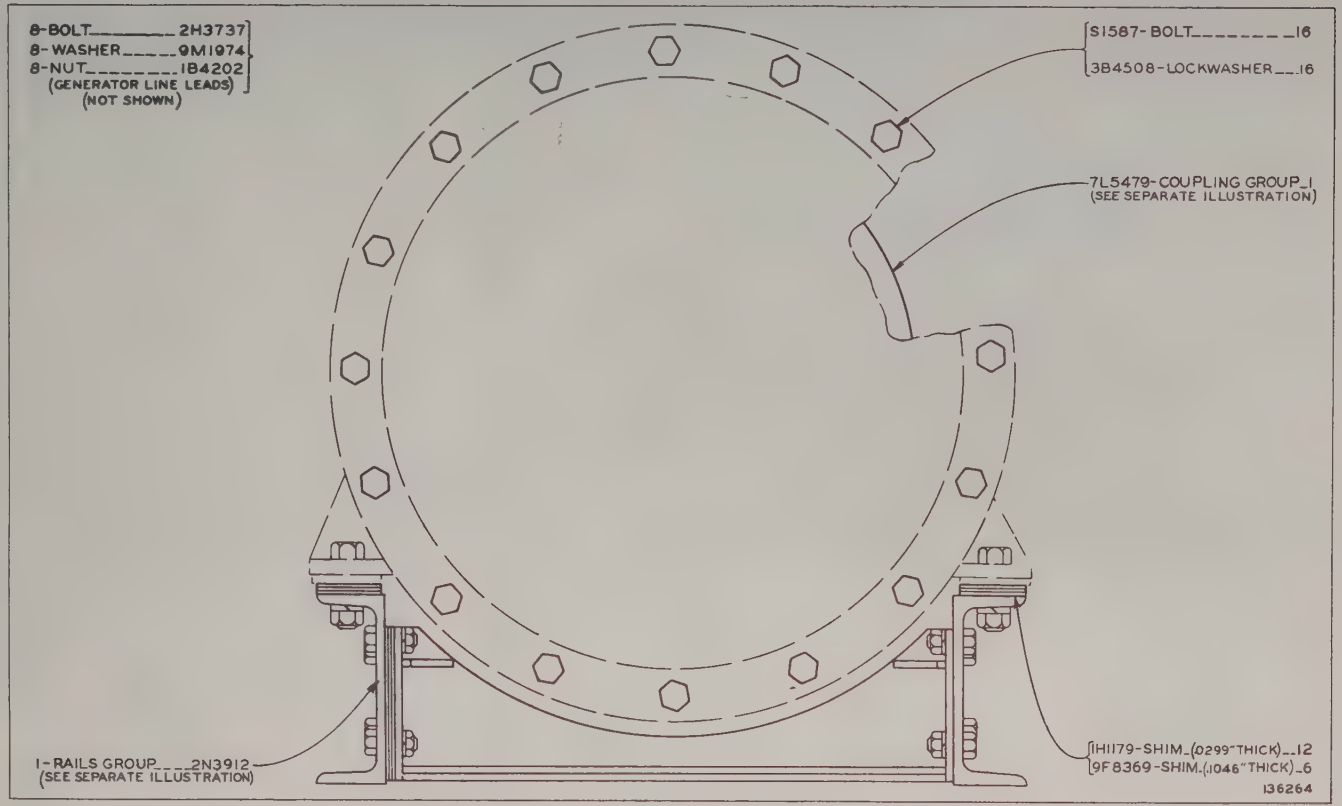

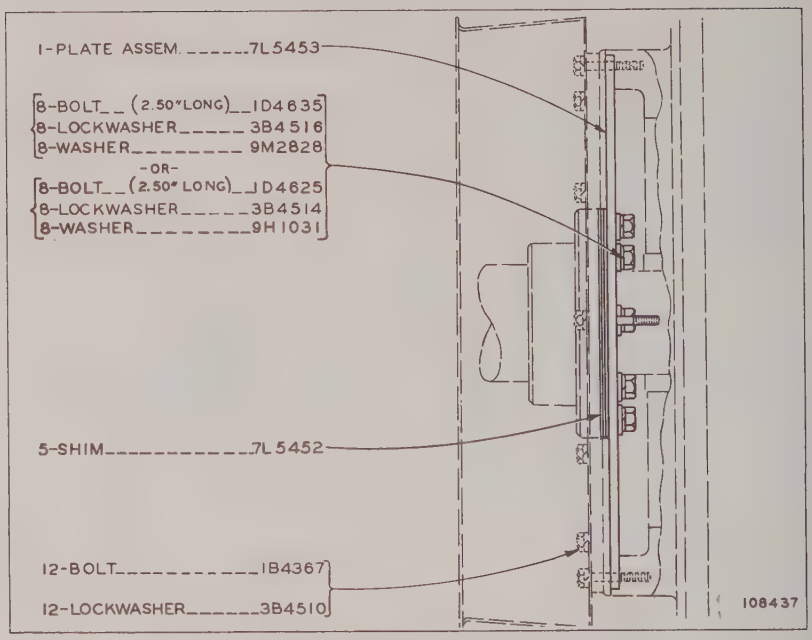

7L5479 GENERATOR DRIVE COUPLING GROUP
Part of 5L2560 Generator Installation Arrangement
shown on Pages 184A, 184B and 184C

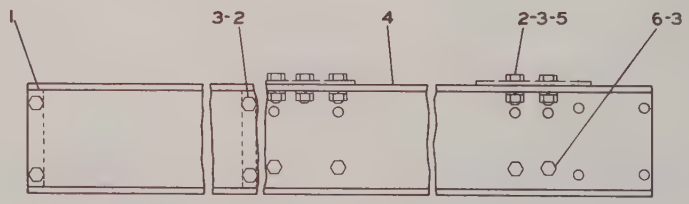

REF. NO.	PART NUMBER	DESCRIPTION	QTY
1	2N1630	BRACE ASSEM.	2
	2N1455	SHIM--------(.030" Thick)-------	12
	2N1456	SHIM--------(.105" Thick)-------	4
2	2A1538	BOLT	18
3	3B4512	LOCKWASHER	26
4	5L2566	SUPPORT	2
5	1B4331	NUT	10
6	S1626	BOLT	8

136265

2N3912 ENGINE AND GENERATOR SUPPORT RAILS GROUP
Also part of 5L2560 Generator Installation
Arrangement shown on Page 184C

REPLACEMENT PARTS FOR GENERATORS

Only those generators which are sold and serviced exclusively by "Caterpillar" Dealers are illustrated on the following pages.

Externally-regulated "Caterpillar" Diesel Electric Sets are equipped with generators made by other manufacturers. Parts for these generators are NOT serviced by Caterpillar Tractor Co. Parts lists and parts should be ordered from the manufacturer whose name is shown on the Generator Name Plate, always giving the generator rating and serial number shown.

PIECES DE RECHANGE POUR GENERATRICES

Dans les pages suivantes, nous ne décrivons que les génératrices constante dont la vente et la réparation est assurée par les concessionnaires Caterpillar.

Les Groupes électrogènes Caterpillar à régulation externe sont équipés de génératrices fabriquées par d'autres constructeurs. Les pièces pour ces génératrices ne sont pas fournies par Caterpillar Tractor Co. Il convient donc de s'adresser au constructeur dont le nom figure sur la plaque de la génératrice pour toutes les listes de pièces et pour les commandes de pièces, en indiquant la puissance et le numéro de série de la génératrice.

REPUESTOS PARA GENERADORES

En las páginas siguientes solamente se ilustran los generadores que son vendidos y reparados exclusivamente por los Distribuidores Caterpillar.

Los Grupos Electrógenos "Caterpillar" de regulación externa están equipados con generadores de otros fabricantes. Caterpillar Tractor Co. no suministra repuestos para estos generadores. Las listas de repuestos y los repuestos mismos deberán pedirse al fabricante cuyo nombre aparece en la placa de identificación del generador, indicando siempre la capacidad de éste y su número de serie indicado.

PECAS DE SUBSTITUICAO PARA GERADORES

Estão ilustrados nas páginas seguintes sòmente os geradores vendidos e assistidos exclusivamente pelos revendedores Caterpillar.

As peças de substituição para os geradores dos Grupos Eletrógenos Caterpillar regulados externamente são fabricadas por outras firmas e não são fornecidas pela Caterpillar Tractor Co. Para obter qualquer delas, bem como os catálogos de peças, dirija-se à firma cujo nome aparece na chapa de identificação do gerador, acrescentando no pedido as especificações e o número de série do gerador.

ERSATZTEILE FÜR GENERATOREN

Nur diejenigen Generatoren welche ausschliesslich von CATERPILLAR Händlern verkauft und gewartet werden, sind auf den folgenden Seiten dargestellt.

Caterpillar Dieselstromaggregate mit Fremdregelung sind mit Generatoren ausgerüstet, die von anderen Herstellern erzeugt werden. Ersatzteile für solche Generatoren werden NICHT auf Grund von Caterpillar Ersatzteillisten geliefert, sondern müssen jeweils bei dem auf dem Firmenschild angegebenen Hersteller des Generators unter Angabe der Leistung und Seriennummer desselben bestellt werden.

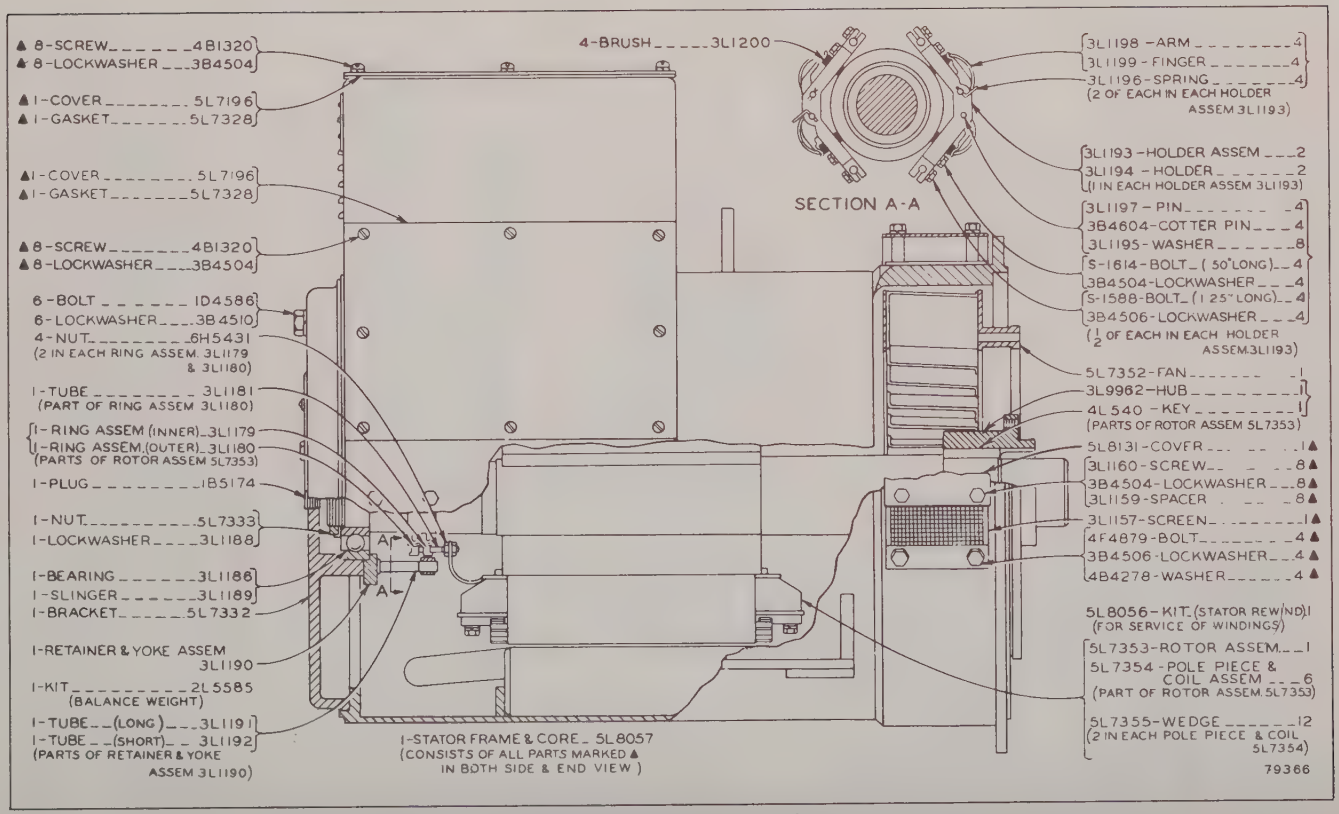

5L3963 GENERATOR—3 Phase—Side View

Generator Serial No. 350SH1 to 350SH499 inclusive. 240-480 Volt, 60 Cycle at 1200 R.P.M. or 200-400 Volt, 50 Cycle at 1000 R.P.M.

5L3963 GENERATOR—3 Phase—End View

Generator Serial No. 350SH1 to 350SH499 inclusive. 240-480 Volt, 60 Cycle at 1200 R.P.M. or 200-400 Volt, 50 Cycle at 1000 R.P.M.

5L8059 Static Exciter and Regulator Assembly parts are shown on Pages 192 through 195

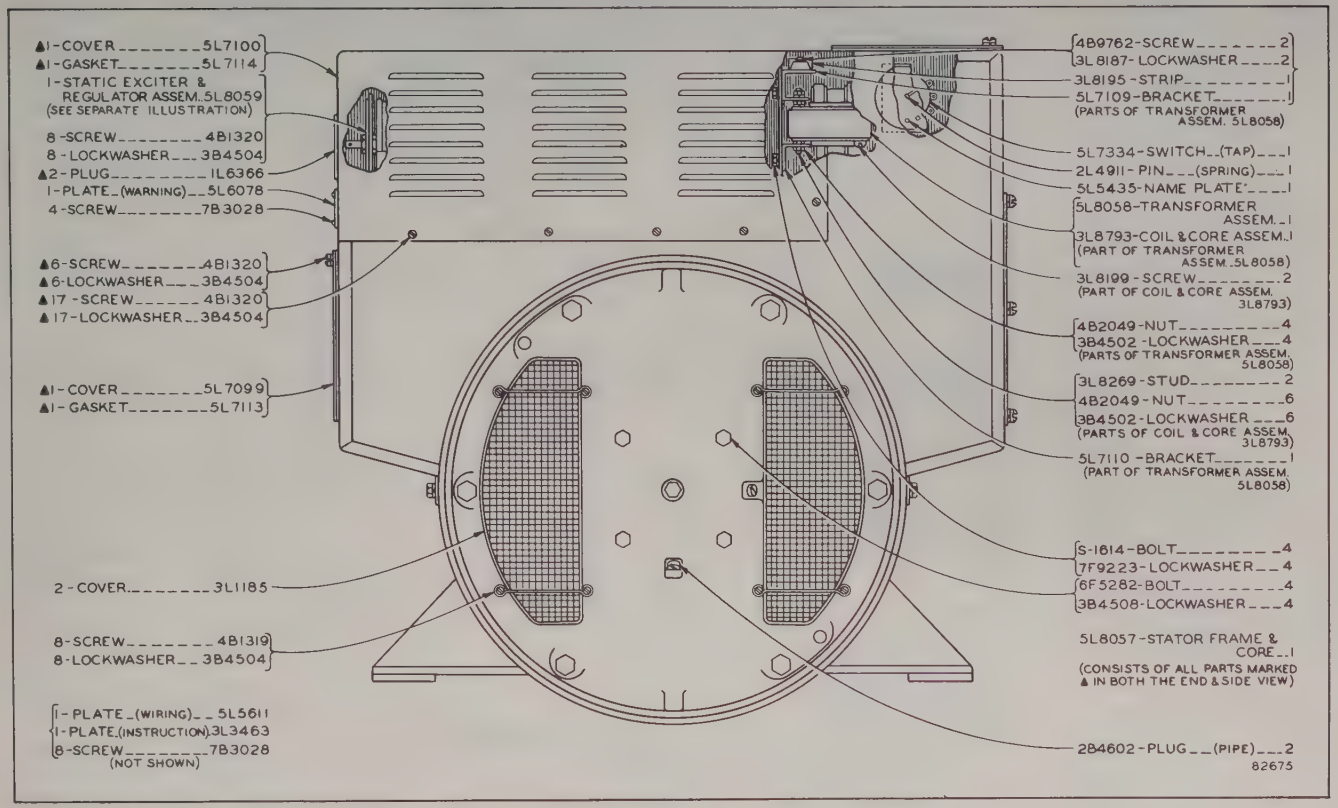

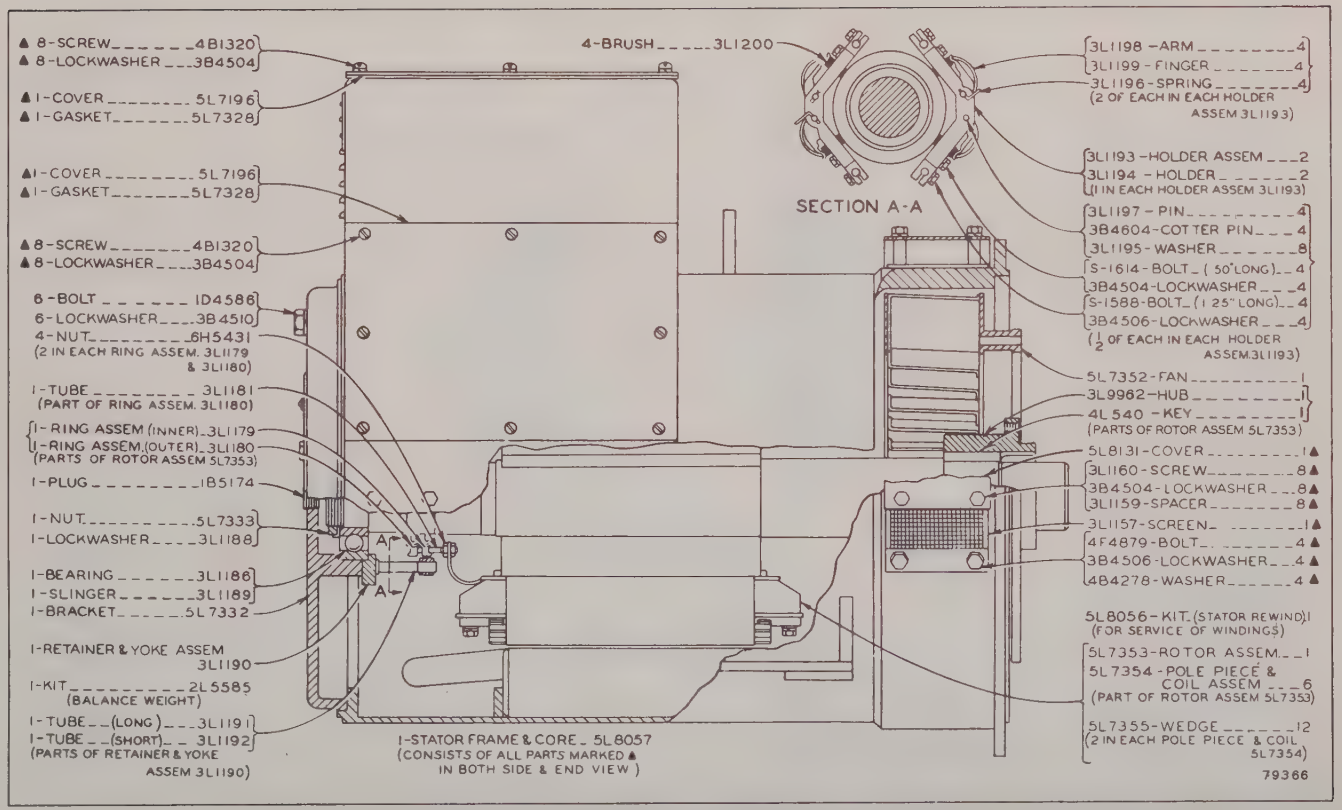

5L3963 GENERATOR—3 Phase—Side View

Effective with Generator Serial No. 350SH500. 240-480 Volt, 60 Cycle at 1200 R.P.M. or 200-400 Volt, 50 Cycle at 1000 R.P.M.

5L3963 GENERATOR—3 Phase—End View

Effective with Generator Serial No. 350SH500. 240-480 Volt. 60 Cycle at 1200 R.P.M. or 200-400 Volt. 50 Cycle at 1000 R.P.M.

6L6118 Static Exciter and Regulator Assembly parts are shown on Pages 196 and 197

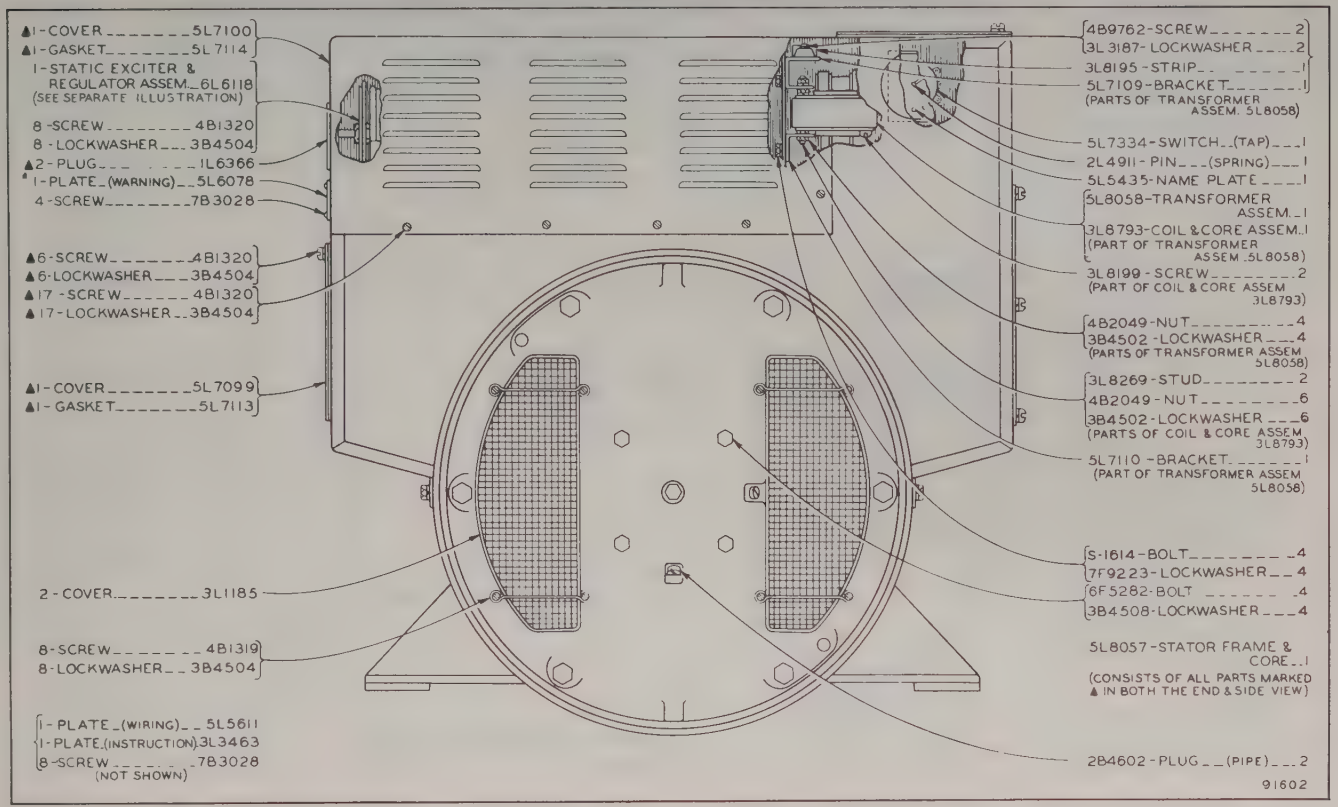

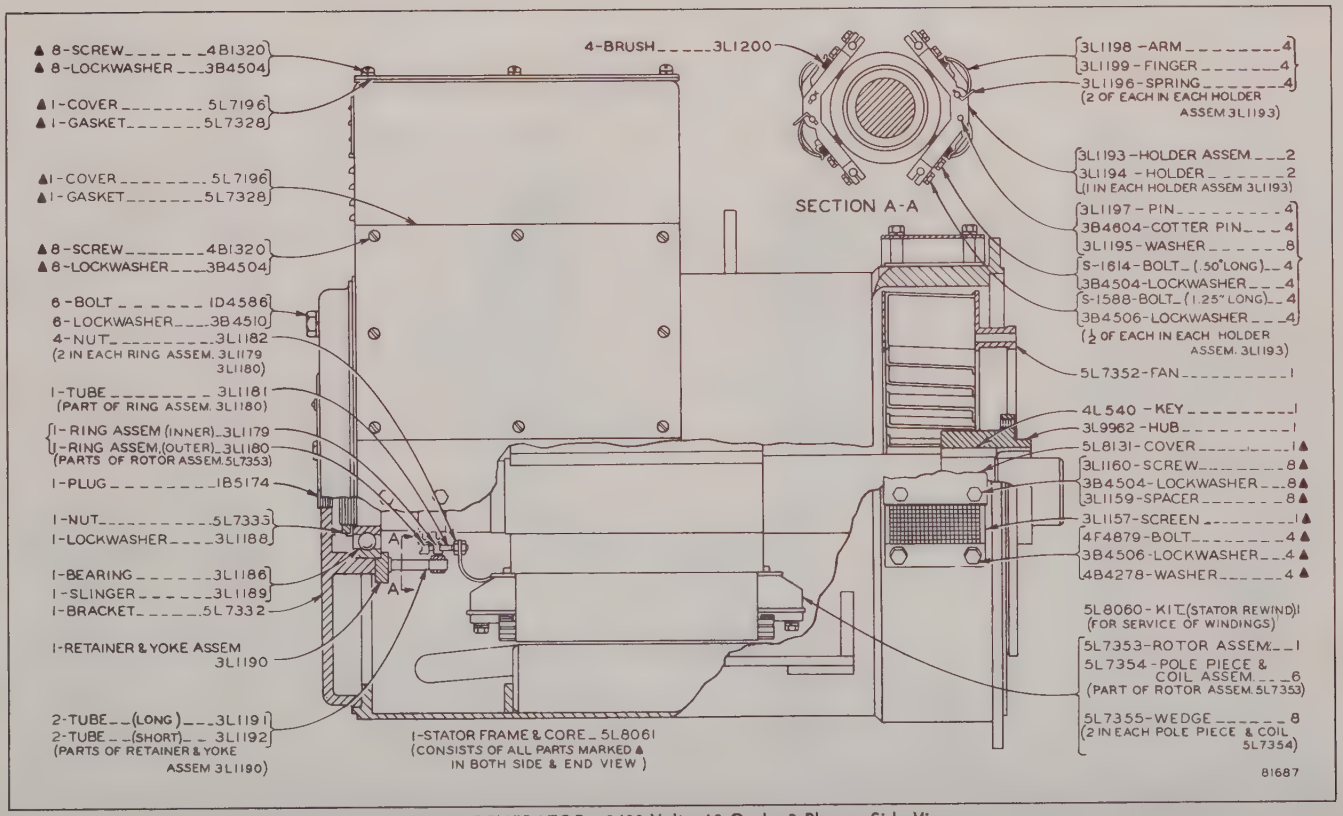

5L3964 GENERATOR—2400 Volt—60 Cycle, 3 Phase—Side View
Effective with Generator Serial No. 350SN1

5L3964 GENERATOR—2400 Volt—60 Cycle, 3 Phase—End View

Effective with Generator Serial No. 350SN1

5L8059 Static Exciter and Regulator Assembly parts are shown on Pages 192 through 195

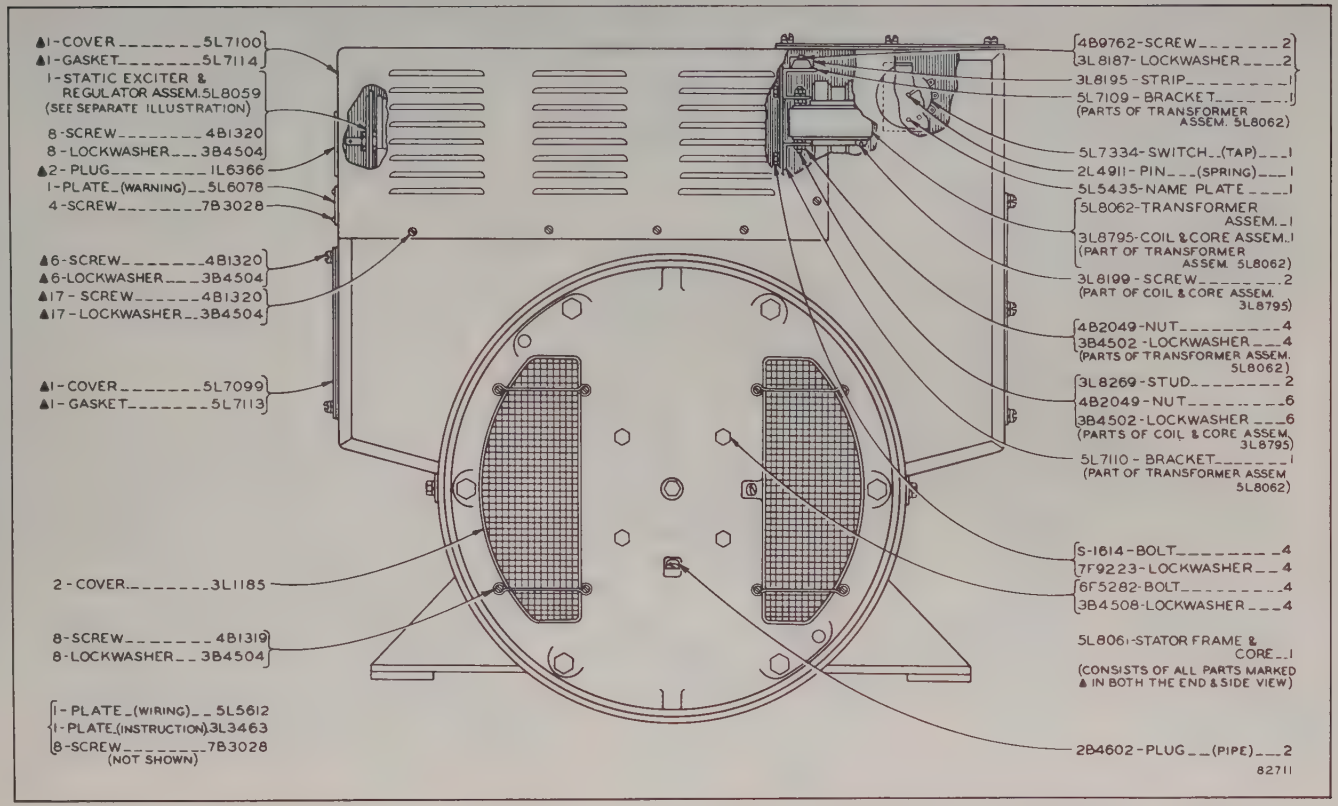

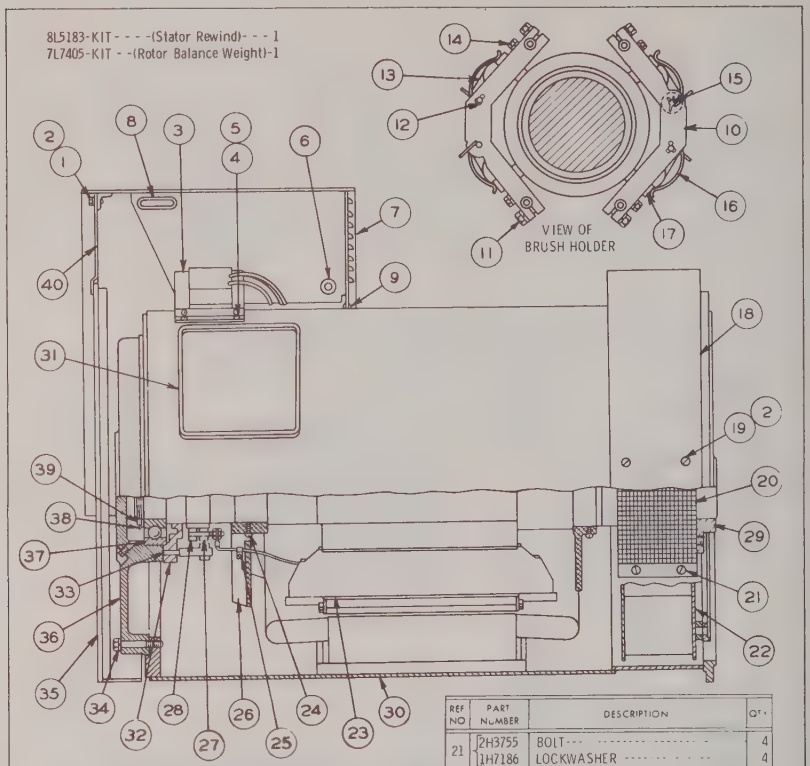

REF NO	PART NUMBER	DESCRIPTION	QTY
1	2D6249	SCREW	6
2	7F9223	LOCKWASHER	12
3	7L7394	TRANSFORMER ASSEM.	1
4	9F9327	SCREW	4
5	9F5599	LOCKWASHER	4
6	8L3948	GROMMET	1
7	8L4085	BOX ASSEM.	1
	8L4086	GASKET SET-----(3 Gaskets)	1
8	7L7388	CHANNEL	1
9	8L4087	CHANNEL	1
		(Parts of 8L4085 Box Assem.)	
10	3L1193	HOLDER ASSEM.	2
	3L1194	HOLDER	2
11	S-1588	BOLT	4
	3B4506	LOCKWASHER	4
12	3B4604	COTTER PIN	4
13	3L1199	FINGER	4
14	S-1614	BOLT	4
	3B4504	LOCKWASHER	4
15	8L4083	PIN AND ARM ASSEM.	4
	3L1195	WASHER	8
16	3L1196	SPRING	4
		(One half each in 3L1193 Holder Assem.)	
17	3L1200	BRUSH	4
18	8L4082	COVER	1
19	8L4093	SCREW	6
	6B9703	SPACER	6
20	8L4081	SCREEN	1

REF NO	PART NUMBER	DESCRIPTION	QTY
21	2H3755	BOLT	4
	1H7186	LOCKWASHER	4
22	8L4084	FAN ASSEM.	1
23	8L5182	ROTOR ASSEM.	1
24	4B1259	SCREW	2
	6L7008	CLAMP	2
25	3H3627	SCREW	2
	9B7233	LOCKWASHER	2
26	8L4077	FAN	1
27	3L1179	RING ASSEM.-------(Inner)---	1
	6H5431	NUT	2
		(Part of 3L1179 Ring Assem.)	
	3L1180	RING ASSEM.------(Outer)----	1
28	3L1181	TUBE	1
	6H5431	NUT	2
		(Parts of 3L1180 Ring Assem.)	
29	8L5044	HUB	1
		(Parts of 8L5182 Rotor Assem.)	
30	8L5181	STATOR ASSEM.	1
31	8L4074	CHANNEL	1
		(Part of 8L5181 Stator Assem.)	
32	3L1190	RETAINER AND YOKE ASSEM.	1
	3L1191	TUBE---------(Long)----------	2
33	3L1192	TUBE---------(Short)---------	2
		(Parts of 3L1190 Retainer and Yoke Assem.)	
34	1D4586	BOLT	6
	3B4510	LOCKWASHER	6
35	8L4089	COVER ASSEM.	1
36	8L4080	BRACKET	1
37	3L1186	BEARING	1
38	3L1188	LOCK	1
39	5L7333	NUT	1
40	8L4090	PANEL	1

121409

7L33 GENERATOR—3 Phase—Side View
Generator Serial No. 350TH1 to 350TH1499 inclusive
230-460 Volt, 60 hertz at 1200 R.P.M. or 200-400 Volt,
50 hertz at 1000 R.P.M.

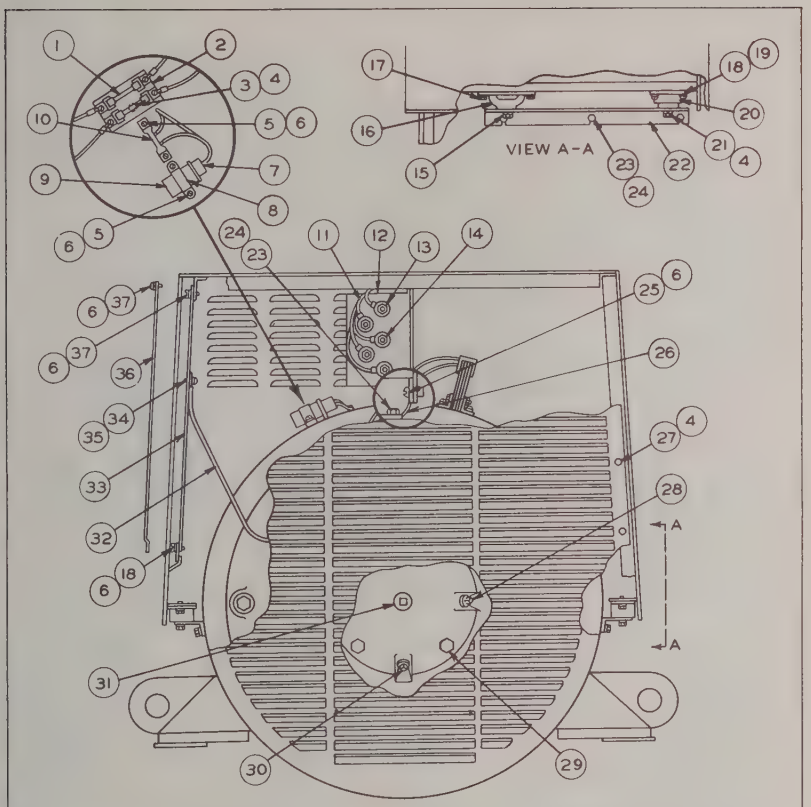

REF NO	PART NUMBER	DESCRIPTION	QTY
1	7L6745	FUSE	2
2	7L7398	BLOCK	1
3	4B1258	SCREW	2
4	7F9223	LOCKWASHER	12
5	2H8533	SCREW	4
6	9F5599	LOCKWASHER	24
7	7L7392	BOOT	1
8	7L7402	STRAP	1
9	7L7400	CAPACITOR	1
10	7L7397	RESISTOR ASSEM.	1
11	8L4865	WIRING HARNESS	1
12	7L6827	NOISE SUPPRESSION ASSEM.	1
13	1B4330	NUT	6
	3B4504	LOCKWASHER	6
14	1D4717	NUT	4
	3B4506	LOCKWASHER	4
	(Parts of 7L6827 Noise Suppression Assem.)		
15	6L6659	BOLT	2
	9F5601	LOCKWASHER	2
16	8L3905	SHOCKMOUNT	2
17	4F4879	BOLT	4
	8F3590	LOCKWASHER	4
18	9F9327	SCREW	12
19	8F1434	LOCKWASHER	8

REF NO	PART NUMBER	DESCRIPTION	QTY
20	7L227	SHOCKMOUNT----(Right Hand)----	1
	7L228	SHOCKMOUNT-----(Left Hand)-----	1
21	S-1614	BOLT	2
22	8L4094	BRACKET-------(Right Hand)------	1
	8L4075	BRACKET--------(Left Hand)-----	1
23	2H3755	BOLT	7
24	1H7186	LOCKWASHER	7
25	6L7104	SCREW	8
26	7L4206	STRAP	1
27	2D6249	SCREW	8
28	2B7408	PLUG	1
29	2B2006	BOLT	4
	3B4508	LOCKWASHER	4
30	2B7409	PLUG	1
31	1B5174	PLUG	1
32	8L4091	CABLE ASSEM.	1
33	8L3904	EXCITER AND REGULATOR ASSEM. (See Separate Illustration)	1
	6L6421	LABEL----------(Warning)--------	1
34	4B1220	SCREW	1
35	9B7233	LOCKWASHER	1
36	8L4088	COVER	1
	6L6523	LABEL-------(Instruction)-------	1
	7L6738	WIRING DIAGRAM	1
37	3K8190	SCREW	8

121410

7L33 GENERATOR—3 Phase—End View
Generator Serial No. 350TH1 to 350TH1499 inclusive. 230-460 Volt, 60 hertz at 1200 R.P.M. or 200-400 Volt, 50 hertz at 1000 R.P.M.
8L3904 Exciter and Regulator parts are shown on Pages 191E and 191F

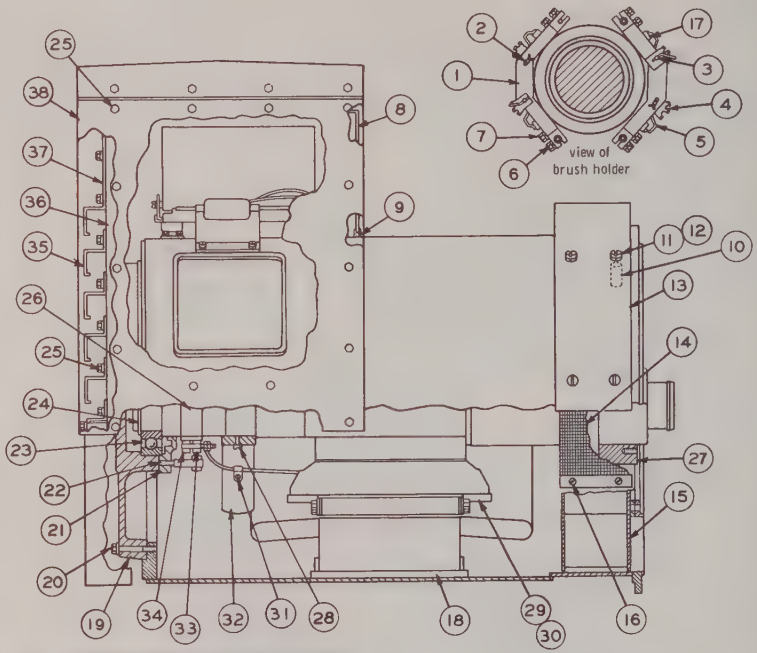

REF NO	PART NUMBER	DESCRIPTION	QTY
1	3L1193	HOLDER ASSEM.	2
	3L1194	HOLDER	2
2	3B4604	COTTER PIN	4
3	8L4083	PIN AND ARM ASSEM.	4
	3L1195	WASHER	8
4	3L1199	FINGER	4
5	3L1196	SPRING	4
6	S1588	BOLT	4
	3B4506	LOCKWASHER	4
7	S1614	BOLT	4
	3B4504	LOCKWASHER	4
	(One-half each in 3L1193 Holder Assem.)		
8	1N5377	PANEL----------(Front)----------	1
9	1N5372	CHANNEL	1
10	6B9703	SPACER	6
11	8L4093	SCREW	6
12	7F9223	LOCKWASHER	6
13	8L4082	COVER	1
14	8L4081	SCREEN	1
15	8L4084	FAN ASSEM.	1
16	2H3755	BOLT	4
	1H7186	LOCKWASHER	4
17	3L1200	BRUSH	4
18	1N7127	STATOR ASSEM.	1
	8L4074	CHANNEL	1
	(Part of 1N7127 Stator Assem.)		
19	8L4080	BRACKET	1
20	1D4586	BOLT	6
	3B4510	LOCKWASHER	6
21	3L1190	RETAINER AND YOKE ASSEM.	1
22	3L1192	TUBE----------(Short)----------	1
	3L1191	TUBE----------(Long)----------	1
	(Parts of 3L1190 Retainer & Yoke Assem.)		

REF. NO.	PART NUMBER	DESCRIPTION	QTY
23	3L1186	BEARING	1
24	1N5410	RING	1
25	S509	BOLT	62
	8F3590	LOCKWASHER	62
26	1N7128	ROTOR ASSEM.	1
27	8L5044	HUB	1
28	4B1259	SCREW	2
29	1N8085	POLE ASSEM.	6
30	5L7331	WEDGE	12
31	6L7008	CLAMP	2
	3H3627	SCREW	2
	9B7233	LOCKWASHER	2
32	8L4077	FAN	1
33	3L1179	RING ASSEM. -----(Inner)-----	1
	3L1182	NUT	2
	(Part of 3L1179 Ring Assem.)		
	3L1180	RING ASSEM. -----(Outer)-----	1
	(Parts of 1N7128 Rotor Assem.)		
34	3L1182	NUT	2
	3L1181	TUBE	1
	(Parts of 3L1180 Ring Assem.)		
35	1N5380	LOUVER	4
36	1N5373	FRAME ASSEM. ----(Right Hand)---	1
	1N5374	FRAME ASSEM. -----(Left Hand)----	1
37	1N5381	PANEL----------(Meter)----------	1
38	1N5379	PANEL----------(Side)----------	2

123808

7L93 GENERATOR—3 Phase—Side View
Effective with Generator Serial No. 350TH1500
230-460 Volt, 60 hertz at 1200 R.P.M. or 200-400 Volt,
50 hertz at 1000 R.P.M.

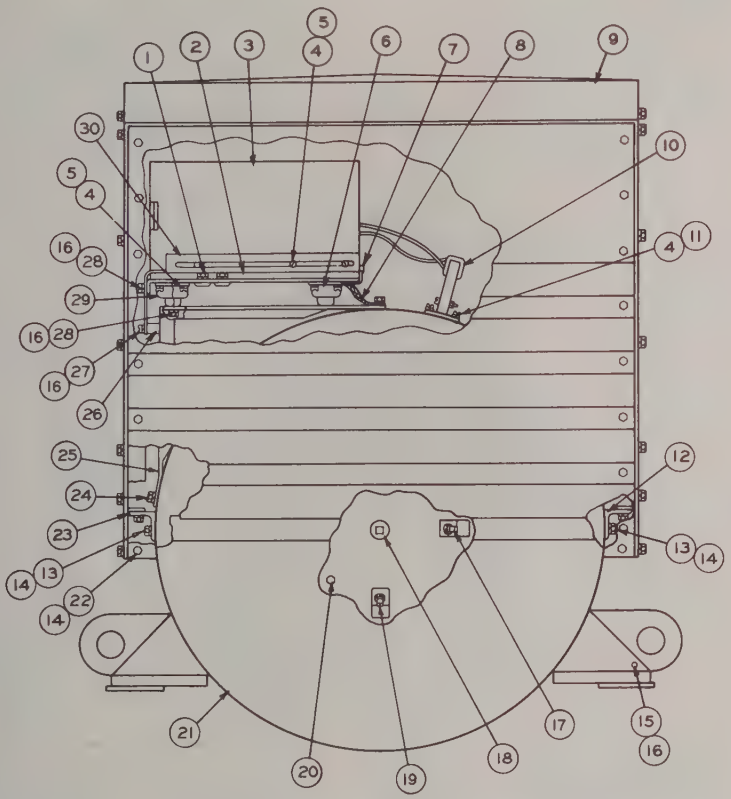

REF NO	PART NUMBER	DESCRIPTION	QTY
1	S1613	BOLT	4
	1H3244	LOCKWASHER	4
2	8L9821	SUPPORT ASSEM.	1
3	1N5375	EXCITER & REGULATOR ASSEM. (See Separate Illustration)	1
4	9F9327	SCREW	24
5	8F1434	LOCKWASHER	20
6	8L5477	SHOCK MOUNT	3
7	8L8602	CHANNEL	1
8	8L5476	STRAP	1
9	1N5376	COVER	1
10	7L7394	DROOP TRANSFORMER ASSEM.	1
11	9F5599	LOCKWASHER	4
12	1N5383	BRACKET	1
13	S509	BOLT	14
14	8F5390	LOCKWASHER	16
15	7B2742	BOLT	1
	1B4330	NUT	1
16	7F9223	LOCKWASHER	9
17	2B7408	PLUG	1
18	1B5174	PLUG	1

REF. NO.	PART NUMBER	DESCRIPTION	QTY
19	2B7409	PLUG	1
20	2B2006	BOLT	4
	3B4508	LOCKWASHER	4
21	1N5378	COVER ASSEM.	1
22	L1143	BOLT	2
23	1N5364	BRACKET	1
24	2H3755	BOLT	6
	1H7186	LOCKWASHER	6
25	1N5384	BRACKET	2
26	8L9826	SPACER	2
27	4B1259	SCREW	2
28	S1614	BOLT	6
29	7L893	SHOCK MOUNT	1
30	8L9823	GUIDE	2
	8L5656	WIRING DIAGRAM	1
	6L6523	LABEL--------(Instruction)--------	1
	8L5183	KIT--------(Stator Rewind)--------	1
	7L7405	KIT----(Rotor Balance Weight)------	1

123809

7L93 GENERATOR—3 Phase—End View
Effective with Generator Serial No. 350TH1500
230-460 Volt, 60 hertz at 1200 R.P.M. or 200-400 Volt, 50 hertz at 1000 R.P.M. 1N5375 Exciter and Regulator parts are shown on Pages 191G and 191H

8L5296-KIT - - - -(Stator Rewind)- - - 1
7L7405-KIT - -(Rotor Balance Weight)-1

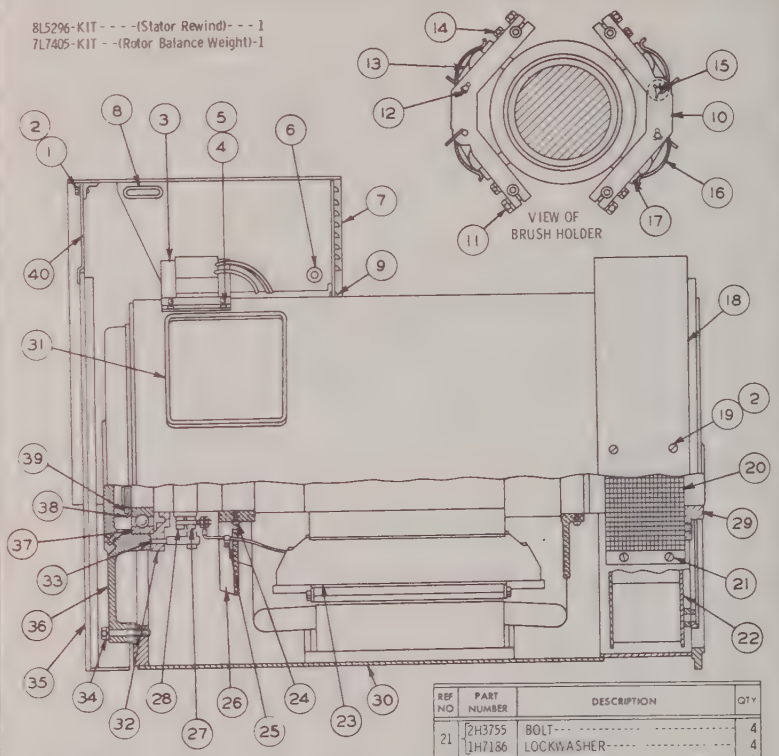

REF NO	PART NUMBER	DESCRIPTION	QTY
1	2D6249	SCREW	6
2	7F9223	LOCKWASHER	12
3	7L7394	TRANSFORMER ASSEM.	1
4	9F9327	SCREW	4
5	9F5599	LOCKWASHER	4
6	8L3948	GROMMET	1
7	8L4085	BOX ASSEM.	1
	8L4086	GASKET SET-----(3 Gaskets)-----	1
8	7L7388	CHANNEL	1
9	8L4087	CHANNEL	1
		(Parts of 8L4085 Box Assem.)	
10	3L1193	HOLDER ASSEM.	2
	3L1194	HOLDER	2
11	S-1588	BOLT	4
	3B4506	LOCKWASHER	4
12	3B4604	COTTER PIN	4
13	3L1199	FINGER	4
14	S-1614	BOLT	4
	3B4504	LOCKWASHER	4
15	8L4083	PIN AND ARM ASSEM.	4
16	3L1195	WASHER	8
	3L1196	SPRING	4
		(One half each in 3L1193 Holder Assem.)	
17	3L1200	BRUSH	4
18	8L4082	COVER	1
19	8L4093	SCREW	6
	6B9703	SPACER	6
20	8L4081	SCREEN	1

REF NO	PART NUMBER	DESCRIPTION	QTY
21	2H3755	BOLT	4
	1H7186	LOCKWASHER	4
22	8L4084	FAN ASSEM.	1
23	8L5182	ROTOR ASSEM.	1
24	4B1259	SCREW	2
	6L7008	CLAMP	2
25	3H3627	SCREW	2
	9B7233	LOCKWASHER	2
26	8L4077	FAN	1
27	3L1179	RING ASSEM. -------(Inner)----	1
	6H5431	NUT	2
		(Part of 3L1179 Ring Assem.)	
	3L1180	RING ASSEM. ------(Outer)-----	1
28	3L1181	TUBE	1
	6H5431	NUT	2
		(Parts of 3L1180 Ring Assem.)	
29	8L5044	HUB	1
		(Parts of 8L5182 Rotor Assem.)	
30	8L5295	STATOR ASSEM.	1
31	8L4074	CHANNEL	1
		(Part of 8L5295 Stator Assem.)	
32	3L1190	RETAINER AND YOKE ASSEM.	1
	3L1191	TUBE---------(Long)----------	2
33	3L1192	TUBE---------(Short)---------	2
		(Parts of 3L1190 Retainer and Yoke Assem.)	
34	1D4586	BOLT	6
	3B4510	LOCKWASHER	6
35	8L4089	COVER ASSEM.	1
36	8L4080	BRACKET	1
37	3L1186	BEARING	1
38	3L1188	LOCK	1
39	5L7333	NUT	1
40	8L4090	PANEL	1

121411

7L34 GENERATOR—287-575 Volt—60 hertz, 3 Phase—Side View
Generator Serial No. 350TG1 to 350TG1499 inclusive

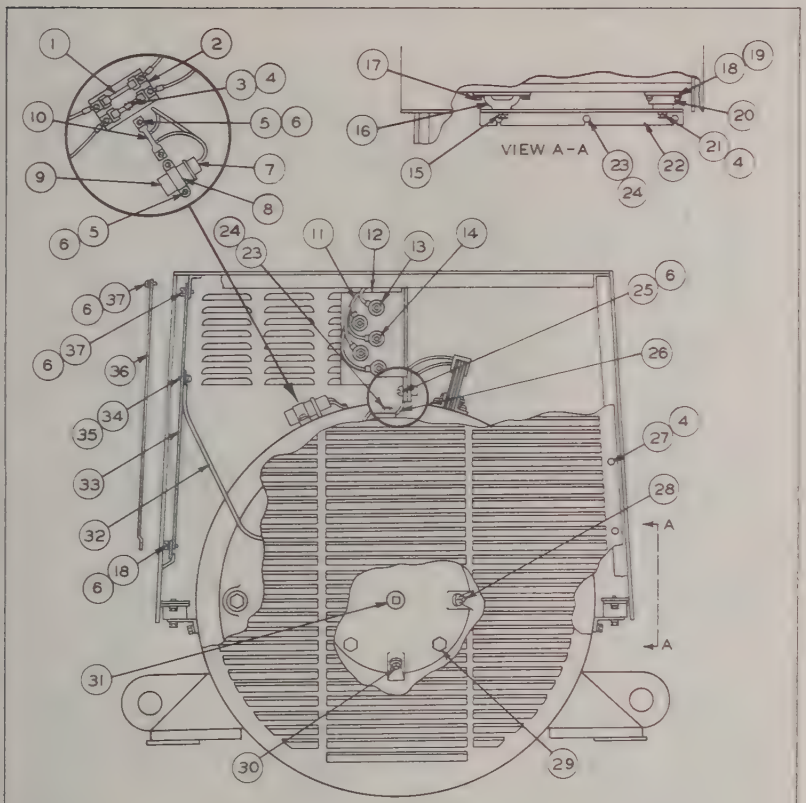

REF NO	PART NUMBER	DESCRIPTION	QTY
1	7L6745	FUSE	2
2	7L7398	BLOCK	1
3	4B1258	SCREW	2
4	7F9223	LOCKWASHER	12
5	2H8533	SCREW	4
6	9F5599	LOCKWASHER	24
7	7L7392	BOOT	1
8	7L7402	STRAP	1
9	7L7400	CAPACITOR	1
10	7L7397	RESISTOR ASSEM.	1
11	8L4865	WIRING HARNESS	1
12	7L6827	NOISE SUPPRESSION ASSEM.	1
13	184330	NUT	6
	184504	LOCKWASHER	6
14	104717	NUT	4
	184506	LOCKWASHER	4
	(Parts of 7L6827 Noise Suppression Assem.)		
15	6L6659	BOLT	2
	9F5601	LOCKWASHER	2
16	8L3905	SHOCKMOUNT	2
17	4F4879	BOLT	4
	8F3590	LOCKWASHER	4
18	9F9327	SCREW	12
19	8F1434	LOCKWASHER	8

REF NO	PART NUMBER	DESCRIPTION	QTY
20	7L7227	SHOCKMOUNT-----(Right Hand)----	1
	7L7228	SHOCKMOUNT-----(Left Hand)-----	1
21	S-1614	BOLT	2
22	8L4094	BRACKET-----(Right Hand)-----	1
	8L4075	BRACKET-----(Left Hand)-----	1
23	2H3755	BOLT	7
24	1H7186	LOCKWASHER	7
25	6L7104	SCREW	8
26	7L4206	STRAP	1
27	2D6249	SCREW	8
28	2B7408	PLUG	1
29	B82006	BOLT	4
	184508	LOCKWASHER	4
30	2B7409	PLUG	1
31	1B5174	PLUG	1
32	8L4091	CABLE ASSEM.	1
33	8L3904	EXCITER AND REGULATOR ASSEM. (See Separate Illustration)	1
	6L6421	LABEL-----(Warning)-----	1
34	4B1220	SCREW	1
35	9B7233	LOCKWASHER	1
36	8L4088	COVER	1
	6L6523	LABEL-----(Instruction)-----	1
	7L6738	WIRING DIAGRAM	1
37	3K5190	SCREW	8

120412

7L34 GENERATOR—287-575 Volt—60 hertz, 3 Phase—End View
Generator Serial No. 350TG1 to 350TG1499 inclusive
8L3904 Exciter and Regulator parts are shown on Pages 191E & 191F

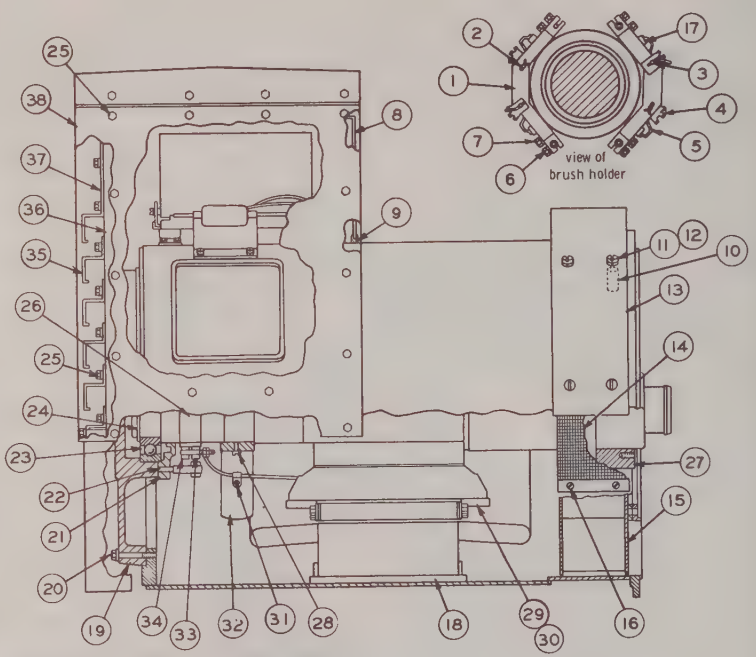

REF NO	PART NUMBER	DESCRIPTION	QTY
1	3L1193	HOLDER ASSEM.	2
	3L1194	HOLDER	2
2	3B4604	COTTER PIN	4
3	8L4083	PIN AND ARM ASSEM.	4
	3L1195	WASHER	8
4	3L1199	FINGER	4
5	3L1196	SPRING	4
6	S1588	BOLT	4
	3B4506	LOCKWASHER	4
7	S1614	BOLT	4
	3B4504	LOCKWASHER	4
	(One-half each in 3L1193 Holder Assem.)		
8	1N5377	PANEL----------(Front)----------	1
9	1N5372	CHANNEL	1
10	6B9703	SPACER	6
11	8L4093	SCREW	6
12	7F9223	LOCKWASHER	6
13	8L4082	COVER	1
14	8L4081	SCREEN	1
15	8L4084	FAN ASSEM.	1
16	2H3755	BOLT	4
	1H7186	LOCKWASHER	4
17	3L1200	BRUSH	4
18	1N7130	STATOR ASSEM.	1
	8L4074	CHANNEL	1
	(Part of 1N7130 Stator Assem.)		
19	8L4080	BRACKET	1
20	1D4586	BOLT	6
	3B4510	LOCKWASHER	6
21	3L1190	RETAINER AND YOKE ASSEM.	1
22	3L1192	TUBE----------(Short)----------	1
	3L1191	TUBE----------(Long)----------	1
	(Parts of 3L1190 Retainer & Yoke Assem.)		

REF. NO.	PART NUMBER	DESCRIPTION	QTY
23	3L1186	BEARING	1
24	1N5410	RING	1
25	S509	BOLT	62
	8F3590	LOCKWASHER	62
26	1N7128	ROTOR ASSEM.	1
27	8L5044	HUB	1
28	4B1259	SCREW	2
29	1N8085	POLE ASSEM.	6
30	5L7331	WEDGE	12
31	6L7008	CLAMP	2
	3H3627	SCREW	2
	9B7233	LOCKWASHER	2
32	8L4077	FAN	1
33	3L1179	RING ASSEM. -----(Inner)-----	1
	3L1182	NUT	2
	(Part of 3L1179 Ring Assem.)		
34	3L1180	RING ASSEM. -----(Outer)-----	1
	(Parts of 1N7128 Rotor Assem.)		
	3L1182	NUT	2
	3L1181	TUBE	1
	(Parts of 3L1180 Ring Assem.)		
35	1N5380	LOUVER	4
36	1N5373	FRAME ASSEM. -----(Right Hand)---	1
	1N5374	FRAME ASSEM. -----(Left Hand)----	1
37	1N5381	PANEL----------(Meter)----------	1
38	1N5379	PANEL----------(Side)----------	2

105294

7L94 GENERATOR—3 Phase—Side View
Effective with Generator Serial No. 350TG1500. 287-575 Volt,
60 hertz at 1200 R.P.M. or 230-460 Volt, 50 hertz at 1000 R.P.M.

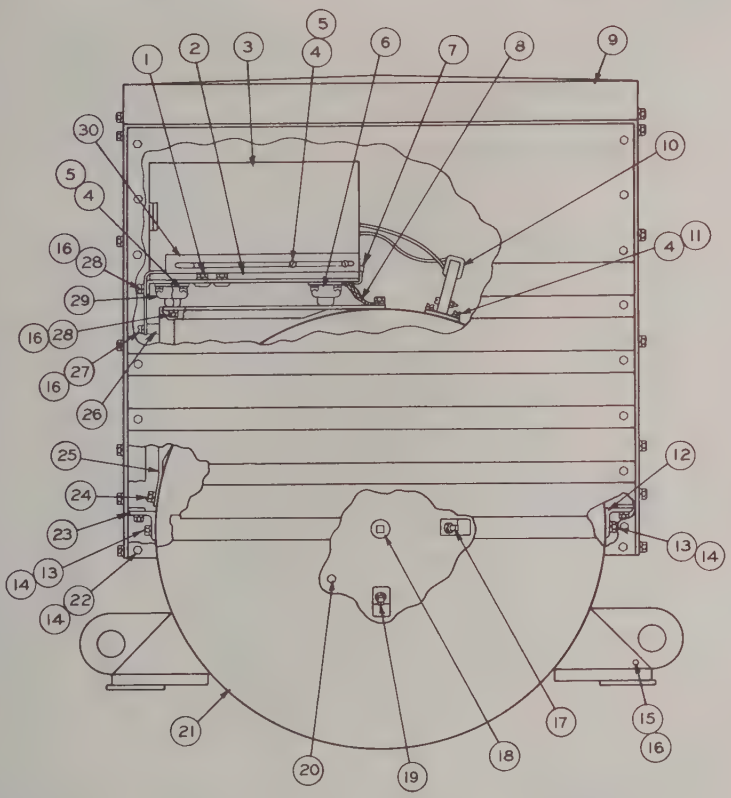

REF NO	PART NUMBER	DESCRIPTION	QTY
1	S1613	BOLT	4
	1H3244	LOCKWASHER	4
2	8L9821	SUPPORT ASSEM.	1
3	1N5375	EXCITER & REGULATOR ASSEM. (See Separate Illustration)	1
4	9F9327	SCREW	24
5	8F1434	LOCKWASHER	20
6	8L5477	SHOCK MOUNT	3
7	8L8602	CHANNEL	1
8	8L5476	STRAP	1
9	1N5376	COVER	1
10	7L7394	DROOP TRANSFORMER ASSEM.	1
11	9F5599	LOCKWASHER	4
12	1N5383	BRACKET	1
13	S509	BOLT	14
14	8F5390	LOCKWASHER	16
15	7B2742	BOLT	1
	1B4330	NUT	1
16	7F9223	LOCKWASHER	9
17	2B7408	PLUG	1
18	1B5174	PLUG	1

REF. NO.	PART NUMBER	DESCRIPTION	QTY
19	2B7409	PLUG	1
20	2B2006	BOLT	4
	3B4508	LOCKWASHER	4
21	1N5378	COVER ASSEM.	1
22	L1143	BOLT	2
23	1N5364	BRACKET	1
24	2H3755	BOLT	6
	1H7186	LOCKWASHER	6
25	1N5384	BRACKET	2
26	8L9826	SPACER	2
27	4B1259	SCREW	2
28	S1614	BOLT	6
29	7L893	SHOCK MOUNT	1
30	8L9823	GUIDE	2
	8L5656	WIRING DIAGRAM	1
	6L6523	LABEL--------(Instruction)--------	1
	8L5296	KIT--------(Stator Rewind)--------	1
	7L7405	KIT----(Rotor Balance Weight)-----	1

105295

7L94 GENERATOR—3 Phase—End View
Effective with Generator Serial No. 350TG1500. 287-575 Volt, 60 hertz at 1200 R.P.M. or 230-460 Volt, 50 hertz at 1000 R.P.M.
1N5375 Exciter & Regulator parts are shown on Pages 191G & 191H

8L9638-KIT - - - -(Stator Rewind)- - - 1
7L7405-KIT - -(Rotor Balance Weight)-1

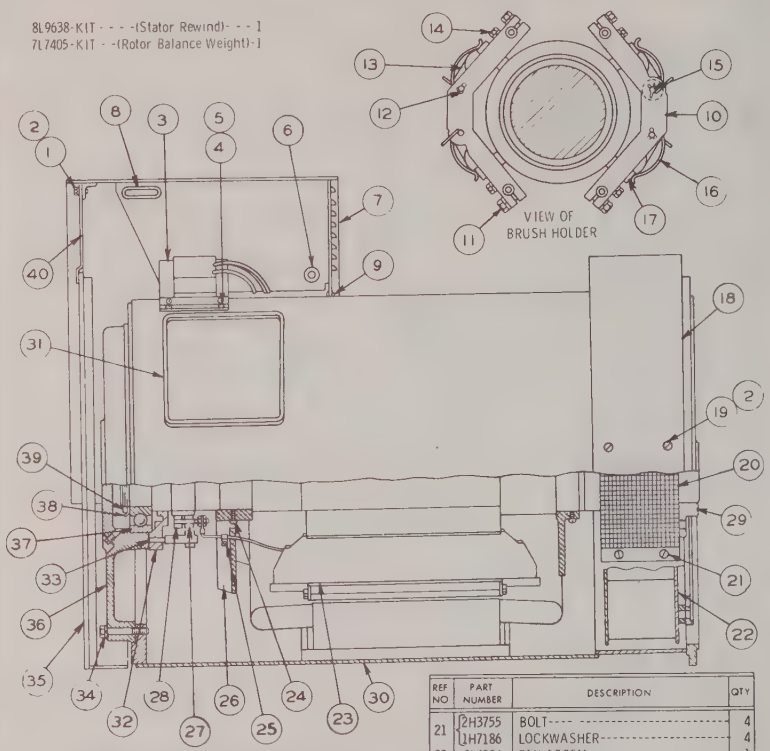

REF NO	PART NUMBER	DESCRIPTION	QTY
1	2D6249	SCREW	6
2	7F9223	LOCKWASHER	12
3	6L7009	TRANSFORMER ASSEM.	1
4	9F9327	SCREW	4
5	9F5599	LOCKWASHER	4
6	8L3948	GROMMET	1
7	8L4085	BOX ASSEM.	1
	8L4086	GASKET SET-(3 Gaskets)	1
8	7L7388	CHANNEL	1
9	8L4087	CHANNEL	1
		(Parts of 8L4085 Box Assem.)	
10	3L1193	HOLDER ASSEM.	2
	3L1194	HOLDER	2
11	S1588	BOLT	4
	3B4506	LOCKWASHER	4
12	3B4604	COTTER PIN	4
13	3L1199	FINGER	4
14	S1614	BOLT	4
	3B4504	LOCKWASHER	4
15	8L4083	PIN AND ARM ASSEM.	4
	3L1195	WASHER	8
16	3L1196	SPRING	4
		(One-half each in 3L1193 Holder Assem.)	
17	3L1200	BRUSH	4
18	8L4082	COVER	1
19	8L4093	SCREW	6
	6B9703	SPACER	6
20	8L4081	SCREEN	1

REF NO	PART NUMBER	DESCRIPTION	QTY
21	2H3755	BOLT	4
	1H7186	LOCKWASHER	4
22	8L4084	FAN ASSEM.	1
23	8L5182	ROTOR ASSEM.	1
24	4B1259	SCREW	2
	6L7008	CLAMP	2
25	3H3627	SCREW	2
	9B7233	LOCKWASHER	2
26	8L4077	FAN	1
27	3L1179	RING ASSEM. -(Inner)	1
	6H5431	NUT	2
		(Part of 3L1179 Ring Assem.)	
	3L1180	RING ASSEM. -(Outer)	1
28	3L1181	TUBE	1
	6H5431	NUT	2
		(Parts of 3L1180 Ring Assem.)	
29	8L5044	HUB	1
		(Parts of 8L5182 Rotor Assem.)	
30	8L9639	STATOR ASSEM.	1
31	8L4074	CHANNEL	1
		(Part of 8L9639 Stator Assem.)	
32	3L1190	RETAINER AND YOKE ASSEM.	1
	3L1191	TUBE-(Long)	2
33	3L1192	TUBE-(Short)	2
		(Parts of 3L1190 Retainer and Yoke Assem.)	
34	1D4586	BOLT	6
	3B4510	LOCKWASHER	6
35	8L4089	COVER ASSEM.	1
36	8L4080	BRACKET	1
37	3L1186	BEARING	1
38	3L1188	LOCK	1
39	5L7333	NUT	1
40	8L4090	PANEL	1

123285

7L35 GENERATOR—2400 Volt—60 hertz, 3 Phase—Side View
Generator Serial No. 350TN1 to 350TN1499 inclusive

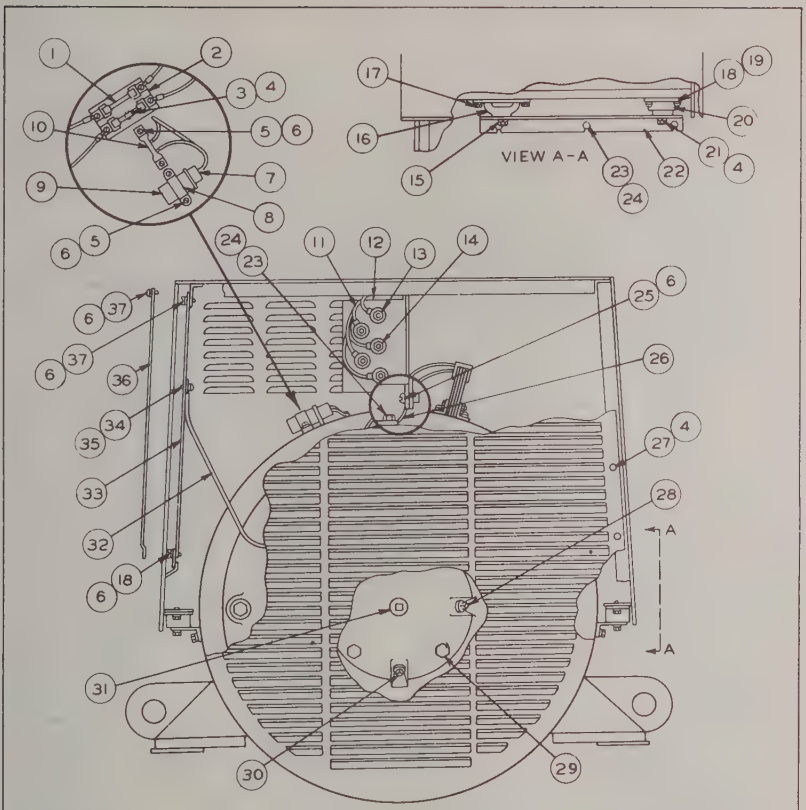

REF NO	PART NUMBER	DESCRIPTION	QTY
1	7L6745	FUSE	2
2	7L7398	BLOCK	1
3	4B1258	SCREW	2
4	7F9223	LOCKWASHER	12
5	2H8533	SCREW	4
6	9F5599	LOCKWASHER	24
7	7L7392	BOOT	1
8	7L7402	STRAP	1
9	7L7400	CAPACITOR	1
10	7L7397	RESISTOR ASSEM.	1
11	8L4865	WIRING HARNESS	1
12	7L6827	NOISE SUPPRESSION ASSEM.	1
13	1B4330	NUT	6
	3B4504	LOCKWASHER	6
14	1D4717	NUT	4
	3B4506	LOCKWASHER	4
	(Parts of 7L6827 Noise Suppression Assem.)		
15	6L6659	BOLT	2
	9F5601	LOCKWASHER	2
16	8L3905	SHOCKMOUNT	2
17	4F4879	BOLT	4
	8F3590	LOCKWASHER	4
18	9F9327	SCREW	12
19	8F1434	LOCKWASHER	8

REF NO	PART NUMBER	DESCRIPTION	QTY
20	7L1227	SHOCKMOUNT----(Right Hand)----	1
	7L1228	SHOCKMOUNT----(Left Hand)----	1
21	S1614	BOLT	2
22	8L4094	BRACKET-------(Right Hand)------	1
	8L4075	BRACKET--------(Left Hand)------	1
23	2H3755	BOLT	7
24	1H7186	LOCKWASHER	7
25	6L7104	SCREW	8
26	7L4206	STRAP	1
27	2D6249	SCREW	8
28	2B7408	PLUG	1
29	2B2006	BOLT	4
	3B4508	LOCKWASHER	4
30	2B7409	PLUG	1
31	1B5174	PLUG	1
32	8L4091	CABLE ASSEM.	1
33	8L8950	EXCITER & REGULATOR ASSEM. (See Separate Illustration)	1
	6L6421	LABEL----------(Warning)---------	1
34	4B1220	SCREW	1
35	9B7233	LOCKWASHER	1
36	8L4088	COVER	1
	6L6523	LABEL--------(Instruction)-------	1
	8L5801	WIRING DIAGRAM	1
37	3K8190	SCREW	8

123286

7L35 GENERATOR—2400 Volt—60 hertz, 3 Phase—End View
Generator Serial No. 350TN1 to 350TN1499 inclusive
8L8950 Exciter and Regulator parts are shown on Page 197B

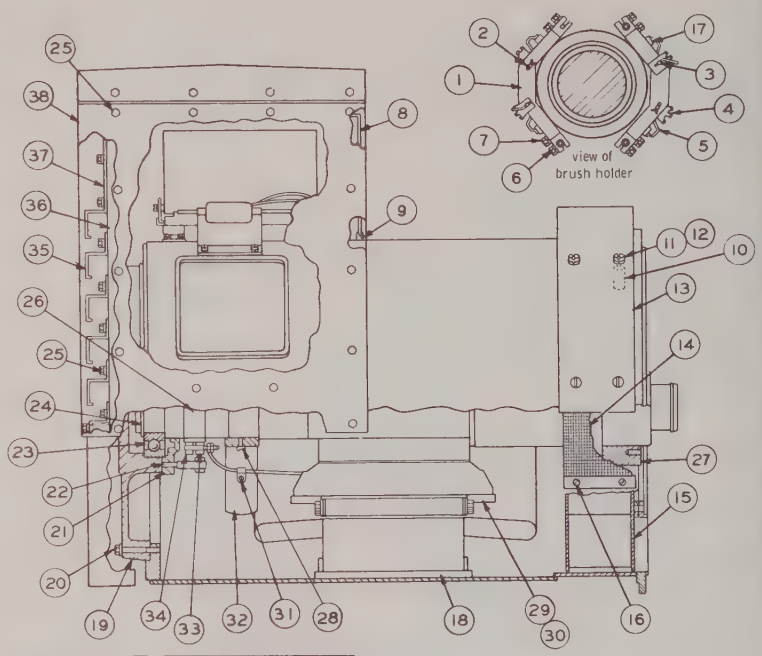

REF. NO.	PART NUMBER	DESCRIPTION	QTY
1	3L1193	HOLDER ASSEM.	2
	3L1194	HOLDER	2
2	3B4604	COTTER PIN	4
3	8L4083	PIN AND ARM ASSEM.	4
	3L1195	WASHER	8
4	3L1199	FINGER	4
5	3L1196	SPRING	4
6	S1588	BOLT	4
	3B4506	LOCKWASHER	4
7	S1614	BOLT	4
	3B4504	LOCKWASHER	4
	(One-half each in 3L1193 Holder Assem.)		
8	1N5377	PANEL---(Front)	1
9	1N5372	CHANNEL	1
10	6B9703	SPACER	6
11	8L4093	SCREW	6
12	7F9223	LOCKWASHER	6
13	8L4082	COVER	1
14	8L4081	SCREEN	1
15	8L4084	FAN ASSEM.	1
16	2H3755	BOLT	4
	1H7186	LOCKWASHER	4
17	3L1200	BRUSH	4
18	1N7131	STATOR ASSEM.	1
	8L4074	CHANNEL	1
	(Part of 1N7131 Stator Assem.)		
19	8L4080	BRACKET	1
20	1D4586	BOLT	6
	3B4510	LOCKWASHER	6
21	3L1190	RETAINER AND YOKE ASSEM.	1
22	3L1192	TUBE---(Short)	1
	3L1191	TUBE---(Long)	1
	(Parts of 3L1190 Retainer & Yoke Assem.)		

REF. NO.	PART NUMBER	DESCRIPTION	QTY
23	3L1186	BEARING	1
24	1N5410	RING	1
25	S509	BOLT	62
	8F3590	LOCKWASHER	62
26	1N7128	ROTOR ASSEM.	1
27	8L5044	HUB	1
28	4B1259	SCREW	2
29	1N8085	POLE ASSEM.	6
30	5L7331	WEDGE	12
31	6L7008	CLAMP	2
	3H3627	SCREW	2
	9B7233	LOCKWASHER	2
32	8L4077	FAN	1
33	3L1179	RING ASSEM.---(Inner)	1
	3L1182	NUT	2
	(Part of 3L1179 Ring Assem.)		
34	3L1180	RING ASSEM.---(Outer)	1
	(Parts of 1N7128 Rotor Assem.)		
	3L1182	NUT	2
	3L1181	TUBE	1
	(Parts of 3L1180 Ring Assem.)		
35	1N5380	LOUVER	4
36	1N5373	FRAME ASSEM.---(Right Hand)	1
	1N5374	FRAME ASSEM.---(Left Hand)	1
37	1N5381	PANEL---(Meter)	1
38	1N5379	PANEL---(Side)	2

123810

7L95 GENERATOR—2400 Volt—60 hertz, 3 Phase—Side View
Effective with Generator Serial No. 350TN1500

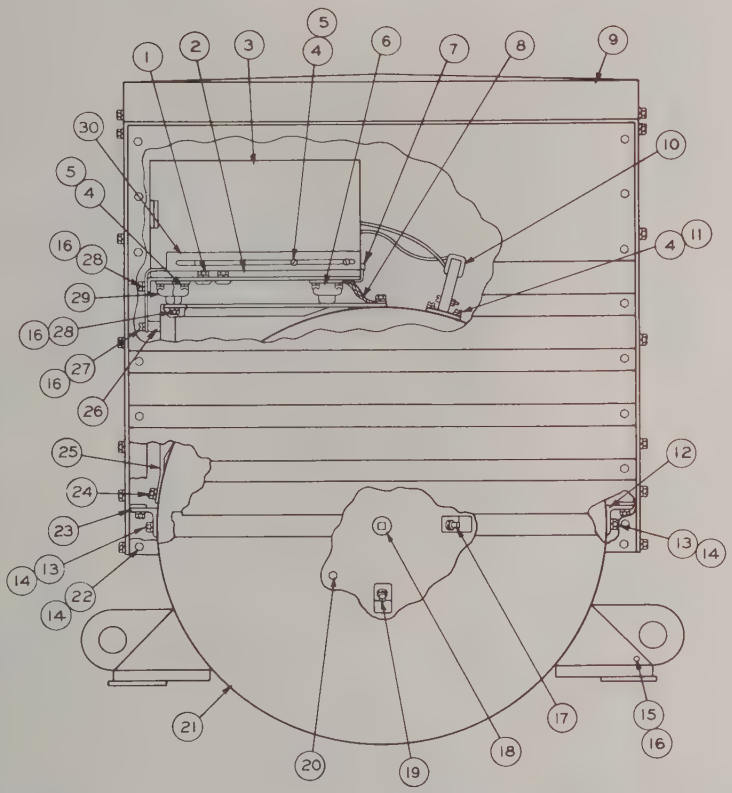

REF NO.	PART NUMBER	DESCRIPTION	QTY
1	S1613	BOLT	4
	1H3244	LOCKWASHER	4
2	8L9821	SUPPORT ASSEM.	1
3	1N5500	EXCITER & REGULATOR ASSEM. (See Separate Illustration)	1
4	9F9327	SCREW	24
5	8F1434	LOCKWASHER	20
6	8L5477	SHOCK MOUNT	3
7	8L8602	CHANNEL	1
8	8L5476	STRAP	1
9	1N5376	COVER	1
10	6L7009	DROOP TRANSFORMER ASSEM.	1
11	9F5599	LOCKWASHER	4
12	1N5383	BRACKET	1
13	S509	BOLT	14
14	8F5390	LOCKWASHER	16
15	7B2742	BOLT	1
	1B4330	NUT	1
16	7F9223	LOCKWASHER	9
17	2B7408	PLUG	1
18	1B5174	PLUG	1

REF NO.	PART NUMBER	DESCRIPTION	QTY
19	2B7409	PLUG	1
20	2B2006	BOLT	4
	3B4508	LOCKWASHER	4
21	1N5378	COVER ASSEM.	1
22	L1143	BOLT	2
23	1N5364	BRACKET	1
24	2H3755	BOLT	6
	1H7186	LOCKWASHER	6
25	1N5384	BRACKET	2
26	8L9826	SPACER	2
27	4B1259	SCREW	2
28	S1614	BOLT	6
29	7L893	SHOCK MOUNT	1
30	8L9823	GUIDE	2
	8L9846	WIRING DIAGRAM	1
	6L6523	LABEL--------(Instruction)--------	1
	8L9638	KIT--------(Stator Rewind)--------	1
	7L7405	KIT----(Rotor Balance Weight)-----	1

123811

7L95 GENERATOR—2400 Volt—60 hertz, 3 Phase—End View
Effective with Generator Serial No. 350TN1500
1N5500 Exciter & Regulator parts are shown on Pages 197C & 197D

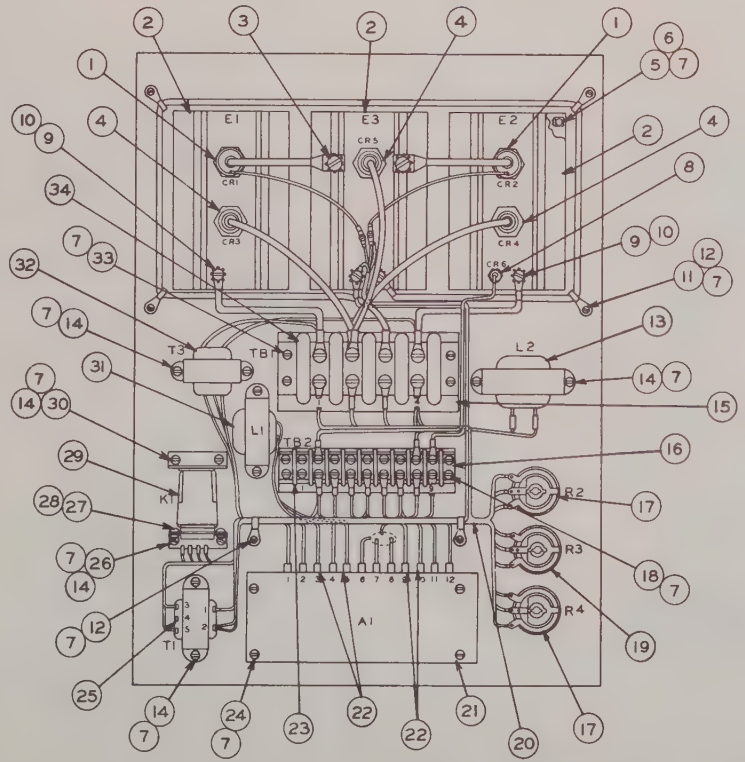

REF NO	PART NUMBER	DESCRIPTION	QTY
1	6L9670	RECTIFIER	2
2	8L5043	HEAT SINK	3
	1S7443	SCREW	2
3	6L7161	NUT	2
	7F9223	LOCKWASHER	2
4	6L3590	RECTIFIER	3
5	6L7077	SCREW	12
6	7L336	NUT	12
7	9B7233	LOCKWASHER	42
8	7L8032	RECTIFIER	1
9	4B1237	SCREW	4
10	8F1434	LOCKWASHER	4
11	6L7008	CLAMP	4
12	4B1221	SCREW	6
13	6L6622	REACTOR	1
14	4B1220	SCREW	12
15	8L5042	STRIP	1
16	7L330	STRIP	1
17	6L7003	POTENTIOMETER	2
18	3H3627	SCREW	4
19	6L8401	POTENTIOMETER	1
20	8L5083	HARNESS	1
21	8L4276	REGULATOR ASSEM.	1
22	8L5040	TERMINAL	4
23	2F2832	TERMINAL BLOCK	1
24	8M8626	SCREW	4
25	6L6623	TRANSFORMER	1
26	8L5055	BRACKET	1
27	2F7306	SCREW	2
28	3L8187	LOCKWASHER	2
29	7L2767	RELAY	1
30	7L331	BRACKET	1
31	7L7812	CHOKE FILTER	1
32	8L4269	TRANSFORMER	1
33	3K8106	SCREW	4
34	8L5041	TERMINAL STRIP	1

121244

8L3904 EXCITER AND REGULATOR ASSEMBLY—Type 1
Part of 7L33 and 7L34 Generators shown on Pages 191B and 191C-1

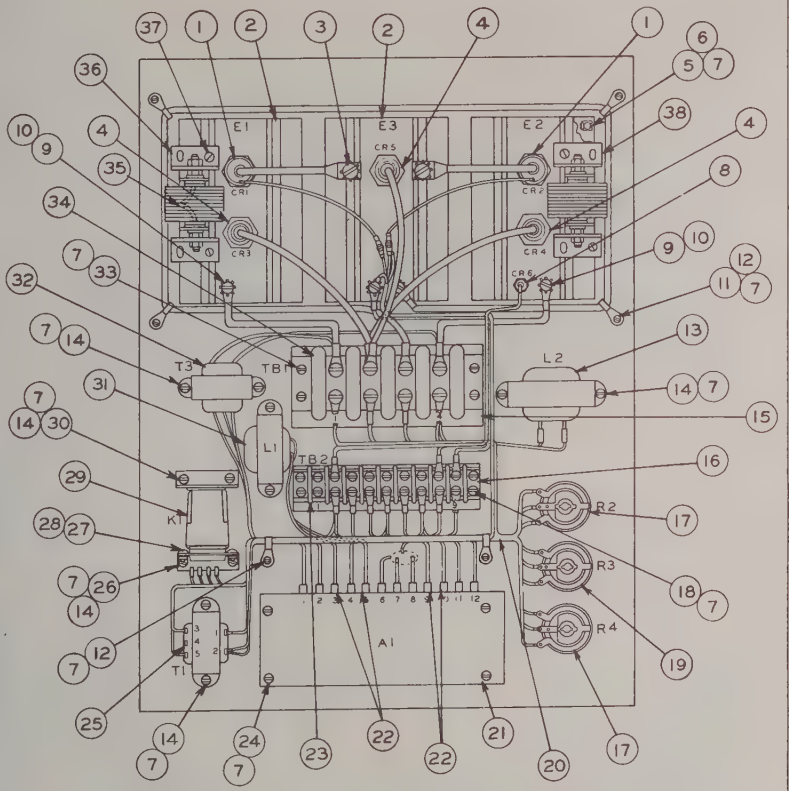

REF NO	PART NUMBER	DESCRIPTION	QTY
1	6L9670	RECTIFIER	2
2	8L5043	HEAT SINK	3
3	1S7443	SCREW	2
	6L7161	NUT	2
	7F9223	LOCKWASHER	2
4	6L3590	RECTIFIER	3
5	6L7077	SCREW	12
6	7L336	NUT	12
7	9B7233	LOCKWASHER	42
8	7L8032	RECTIFIER	1
9	4B1237	SCREW	4
10	8F1434	LOCKWASHER	4
11	6L7008	CLAMP	4
12	4B1221	SCREW	6
13	6L6622	REACTOR	1
14	4B1220	SCREW	12
15	8L5042	STRIP	1
16	7L330	STRIP	1
17	6L7003	POTENTIOMETER	2
18	3H3627	SCREW	4
19	6L8401	POTENTIOMETER	1
20	8L5083	HARNESS	1
21	8L4276	REGULATOR ASSEM.	1
22	8L5040	TERMINAL	4
23	2F2832	TERMINAL BLOCK	1
24	8M8626	SCREW	4
25	6L6623	TRANSFORMER	1
26	8L5055	BRACKET	1
27	2F7306	SCREW	2
28	3L8187	LOCKWASHER	2
29	7L2767	RELAY	1
30	7L331	BRACKET	1
31	7L7812	CHOKE FILTER	1
32	8L4269	TRANSFORMER	1
33	3K8106	SCREW	4
34	8L5041	TERMINAL STRIP	1
(C) 35	8L5456	LEAD ASSEM.	1
(C) 35	8L4873	VOLTAGE SUPPRESSOR--(Phase)	1
	7S1201	SCREW	4
(C) 37	4B2043	NUT	4
	9F5599	LOCKWASHER	4
(C) 38	8L4863	VOLTAGE SUPPRESSOR--(Field)	1

123284

(C) INDICATES CHANGE FROM PREVIOUS TYPE

8L3904 EXCITER AND REGULATOR ASSEMBLY—Type 2
Part of 7L33 and 7L34 Generators shown on Pages 191B and 191C-1

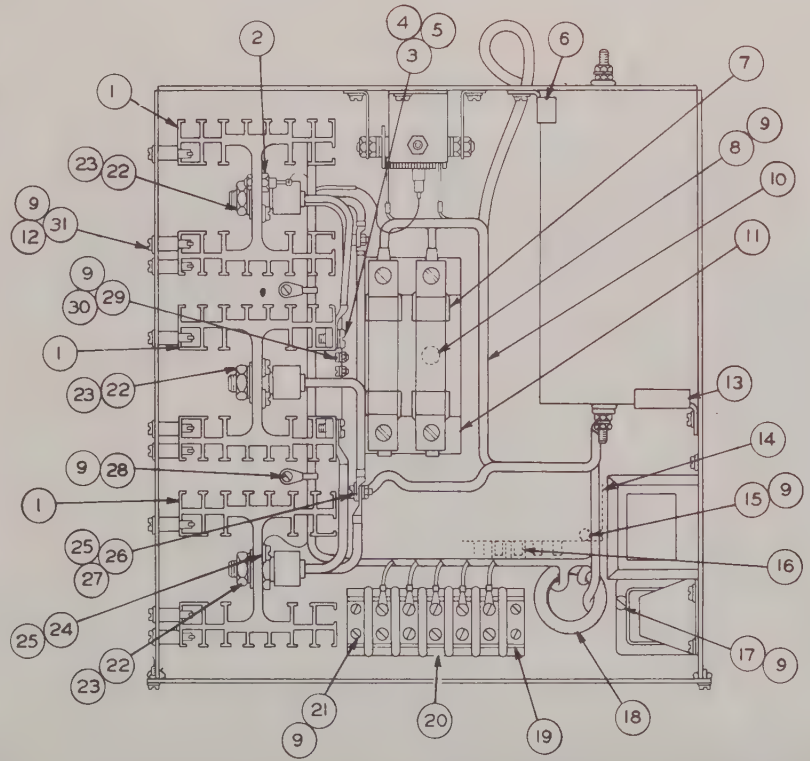

REF. NO.	PART NUMBER	DESCRIPTION	QTY
1	8L5043	HEAT SINK	3
2	7L8032	RECTIFIER	1
3	1S7443	SCREW	2
4	6L7161	NUT	2
5	7F9223	LOCKWASHER	2
6	8L5830	BRACKET	1
7	7L6745	FUSE	2
8	3D9799	SCREW	2
9	9B7233	LOCKWASHER	28
10	1N5569	HARNESS	1
11	7L7398	BLOCK	1
12	8L5827	NUT	12
13	8L5829	BRACKET	1
14	8L4276	REGULATOR ASSEM.	1
15	8M8626	SCREW	4
16	8L5040	TERMINAL	2
17	4B1220	SCREW	2
18	8L5478	GROMMET	2
19	2L1717	STRIP----(Barrier Terminal)	1
20	1N7253	STRIP----(Terminal Marker)	1
21	5M6668	SCREW	4
22	6L3590	RECTIFIER--------(Power)--------	3
23	6L9660	RECTIFIER--------(Silicon)-------	2
24	4B1237	SCREW	4
25	8F1434	LOCKWASHER	5
26	1H4336	SCREW	1
27	8L5822	NUT	1
28	4B1221	SCREW	2
29	7S1201	SCREW	2
30	4B2043	NUT	2
31	8L5828	SCREW	12

1N5375 EXCITER AND REGULATOR ASSEMBLY—Part 1
Part of 7L93 and 7L94 Generators shown on Pages 191B-2 and 191D

1N5375 EXCITER AND REGULATOR ASSEMBLY—Part 2

Part of 7L93 and 7L94 Generators shown on Pages 191B-2 and 191D

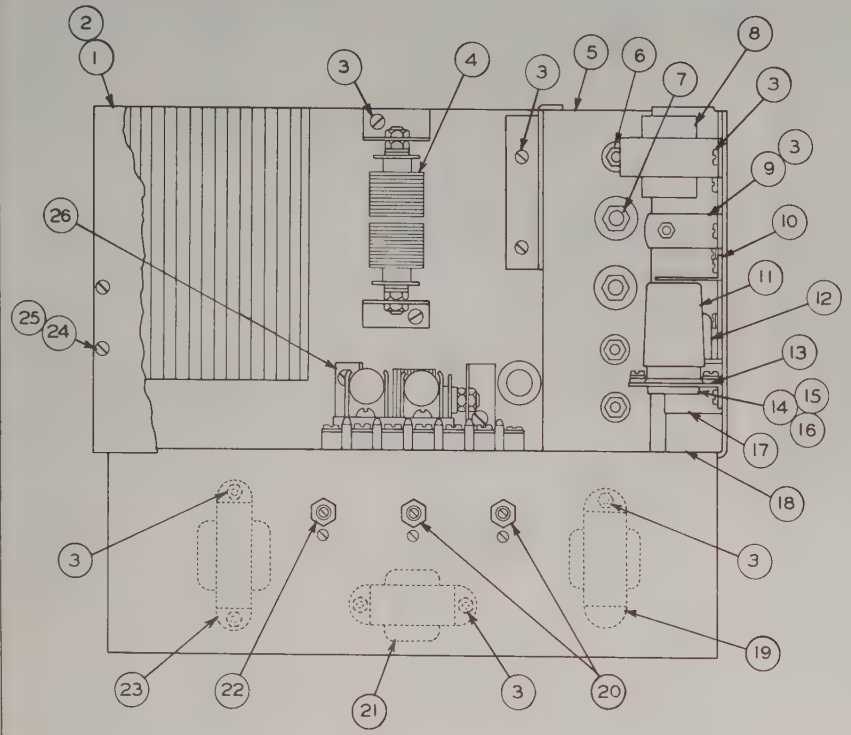

REF. NO.	PART NUMBER	DESCRIPTION	QTY
1	1N5036	GUARD ASSEM.	1
2	6L6421	LABEL (Part of 1N5036 Guard Assem.)	1
3	4B1220	SCREW	26
	9B7233	LOCKWASHER	26
4	8L4873	VOLTAGE SUPPRESSOR	1
5	1N5567	NOISE SUPPRESSION ASSEM.	1
6	1B4330	NUT	6
	3B4504	LOCKWASHER	6
7	1D4717	NUT	4
	3B4506	LOCKWASHER (Parts of 1N5567 Assem.)	4
8	6L6622	REACTOR	1
9	7L7397	RESISTOR ASSEM.	1
10	7L331	BRACKET	1
11	8L5823	RELAY	1
12	7L7392	BOOT	1
13	8L5824	BRACKET	1
14	8L5826	SOCKET ASSEM.	1
15	7L2770	RECTIFIER (Part of 8L5826 Socket Assem.)	1
16	7L2770	RECTIFIER	1
17	7L7402	STRAP	1
18	7L7400	CAPACITOR	1
19	6L6623	TRANSFORMER	1
20	6L7003	POTENTIOMETER-----(Gain)-----	2
21	8L4269	TRANSFORMER	1
22	6L8401	POTENTIOMETER-----(Droop)-----	1
23	7L7812	CHOKE----------(Filter)----------	1
24	5S7348	SCREW	4
	8L5853	NUT----------(Clip)----------	2
25	3L8187	LOCKWASHER	4
26	8L4863	VOLTAGE SUPPRESSOR	1

124031

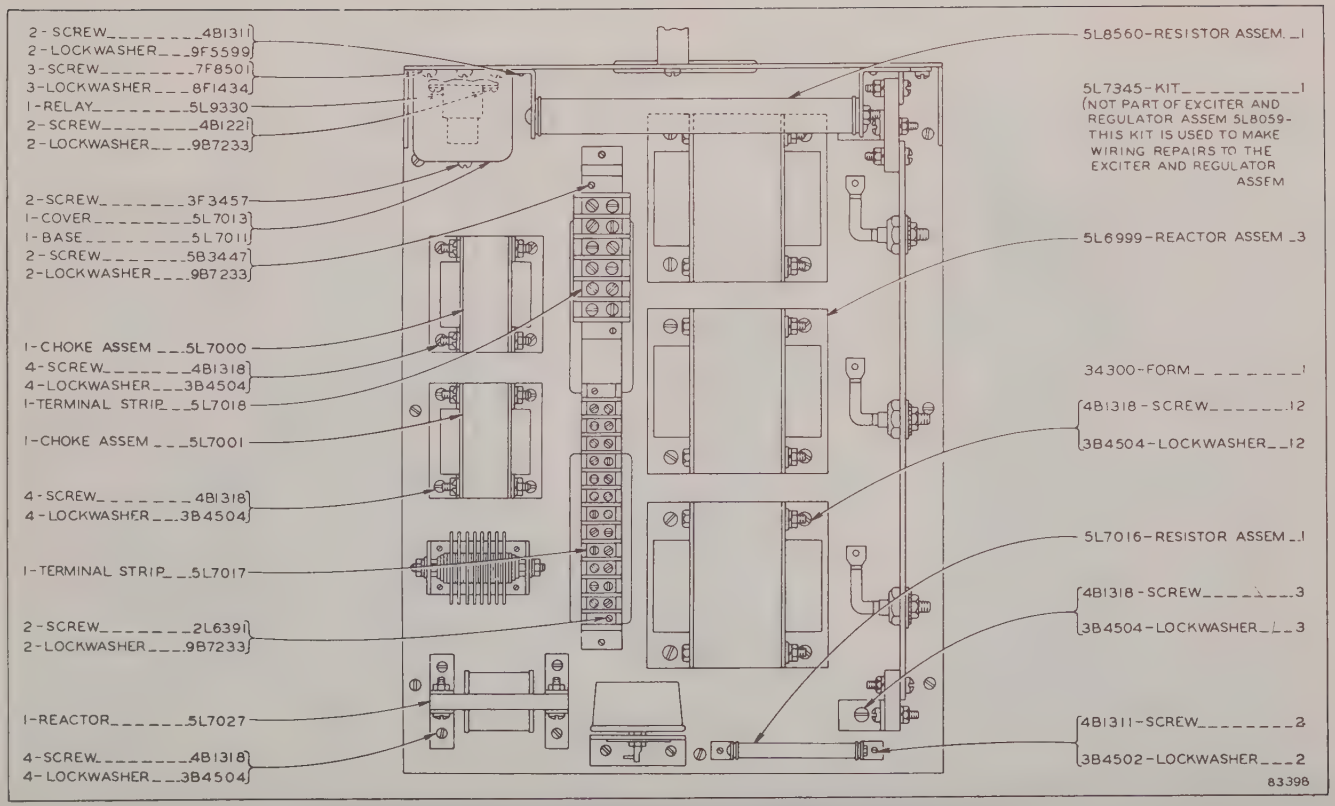

5L8059 STATIC EXCITER AND REGULATOR ASSEMBLY—Top View—Part One
Generator Serial No. 350SH1 to 350SH83 and 350SN1 to 350SN2 inclusive
Part of 5L3963 and 5L3964 Generators shown on Pages 187 and 191

5L8059 STATIC EXCITER AND REGULATOR ASSEMBLY—Top View—Part Two

Generator Serial No. 350SH1 to 350SH83 and 350SN1 to 350SN2 inclusive
Part of 5L3963 and 5L3964 Generators shown on Pages 187 and 191

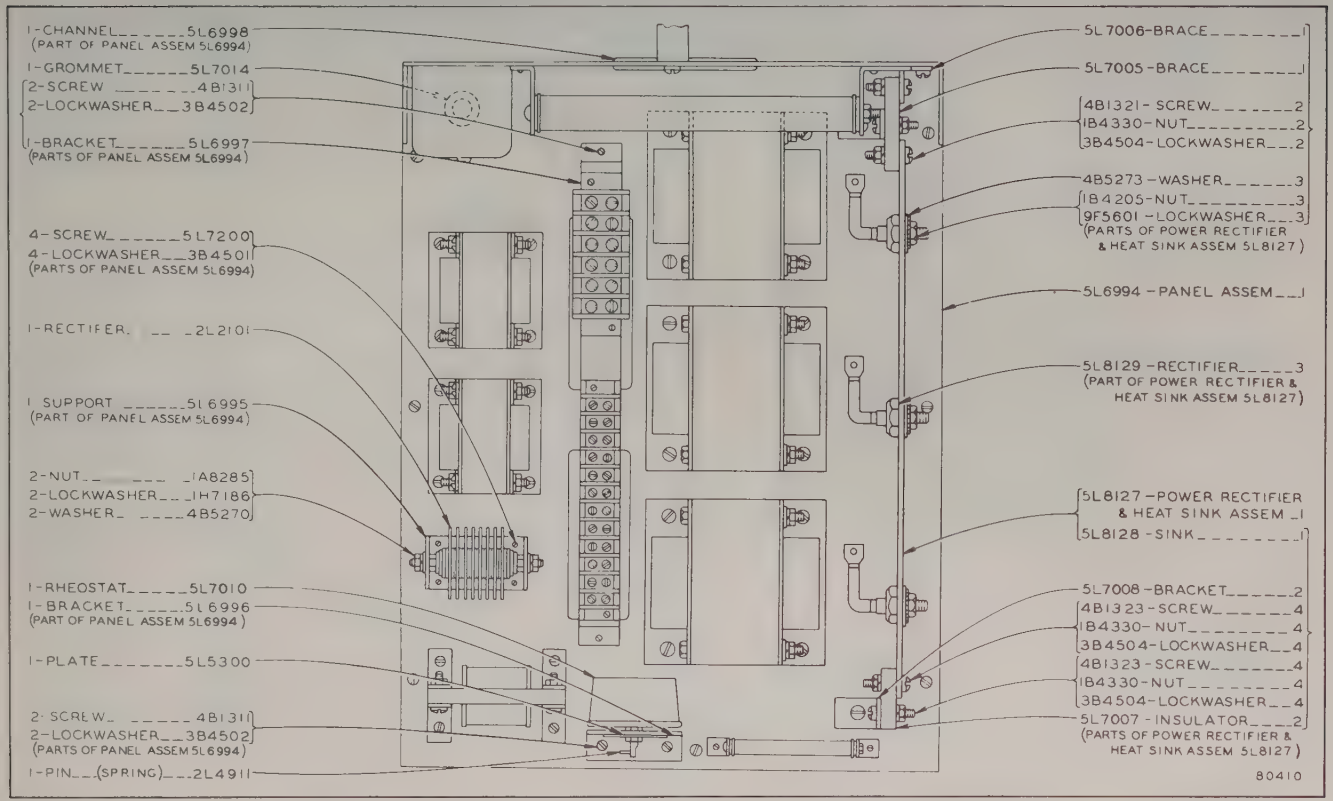

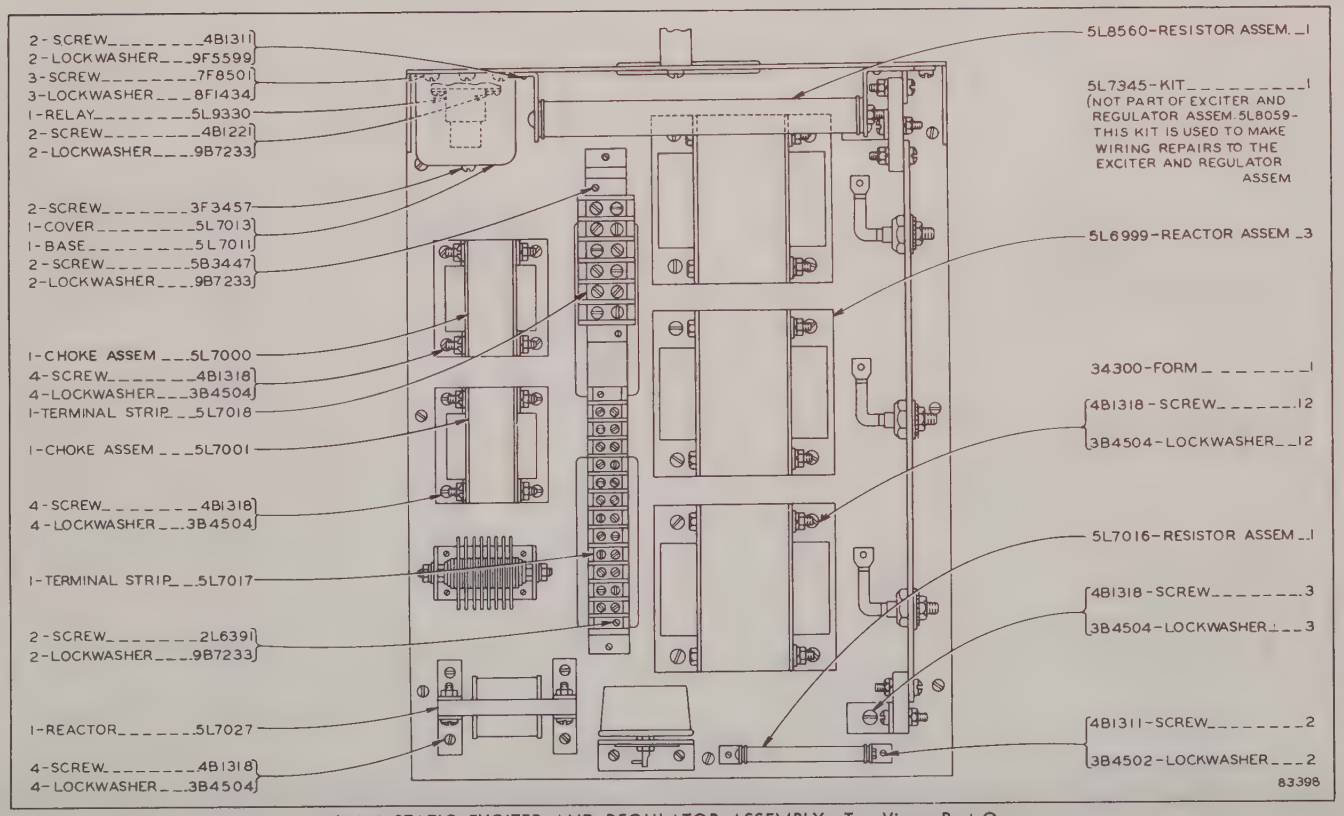

5L8059 STATIC EXCITER AND REGULATOR ASSEMBLY—Top View—Part One
Generator Serial No. 350SH84 to 350SH499 inclusive and 350SN3—Up
Part of 5L3963 and 5L3964 Generators shown on Pages 187 and 191

5L8059 STATIC EXCITER AND REGULATOR ASSEMBLY—Top View—Part Two

Generator Serial No. 350SH84 to 350SH499 inclusive and 350SN3—Up
Part of 5L3963 and 5L3964 Generators shown on Pages 187 and 191

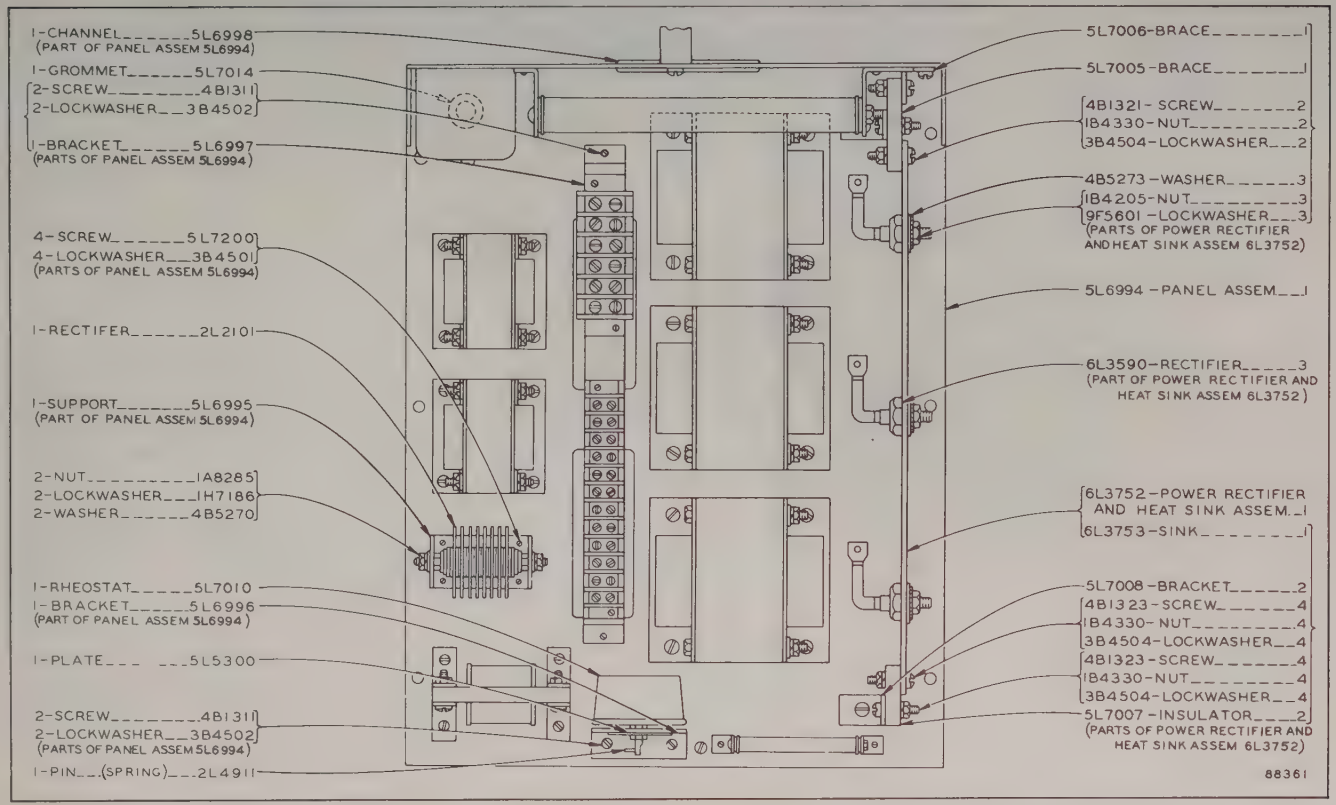

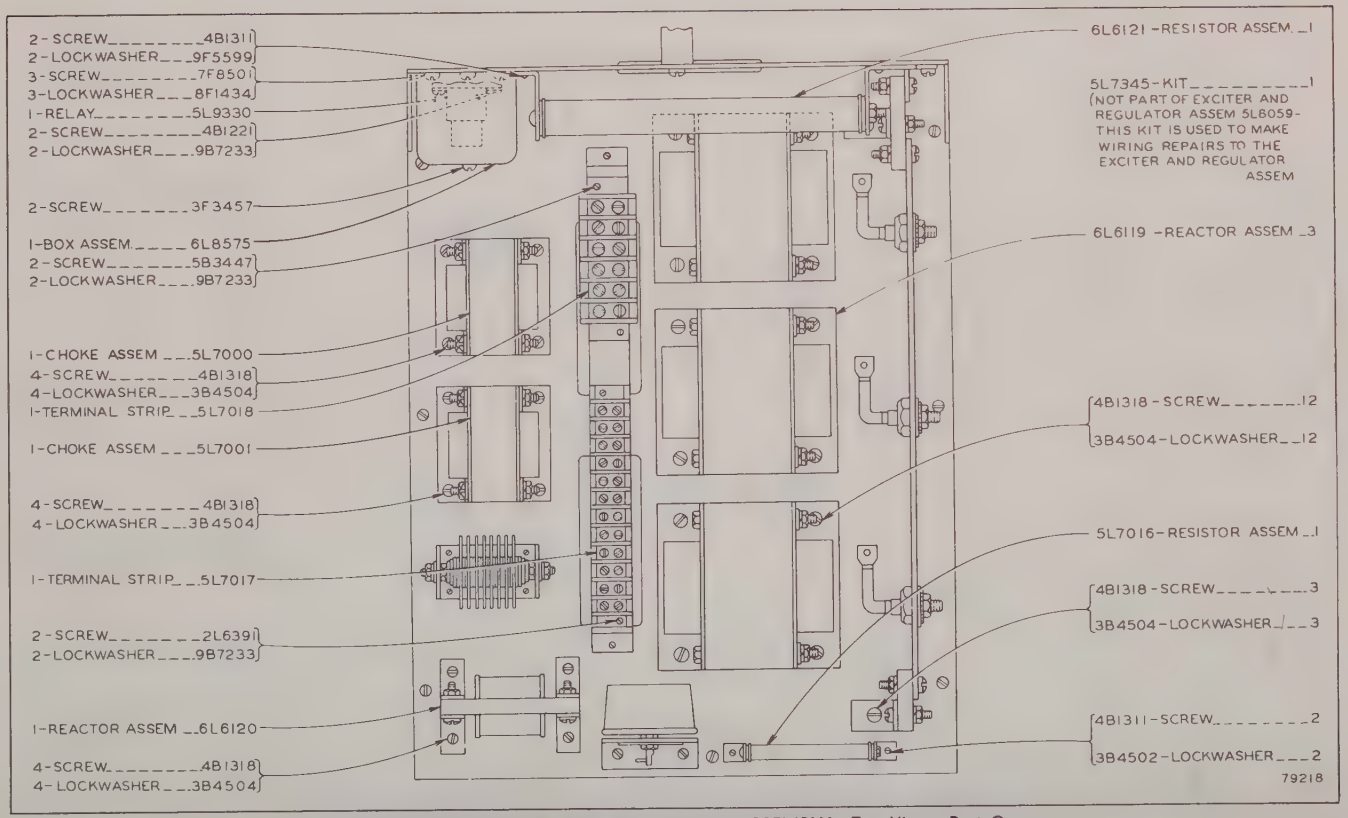

6L6118 STATIC EXCITER AND REGULATOR ASSEMBLY—Top View—Part One
Effective with Serial No. 350SH500
Part of 5L3963 Generator shown on Page 189

6L6118 STATIC EXCITER AND REGULATOR ASSEMBLY—Top View—Part Two

Effective with Serial No. 350SH500

Part of 5L3963 Generator shown on Page 189

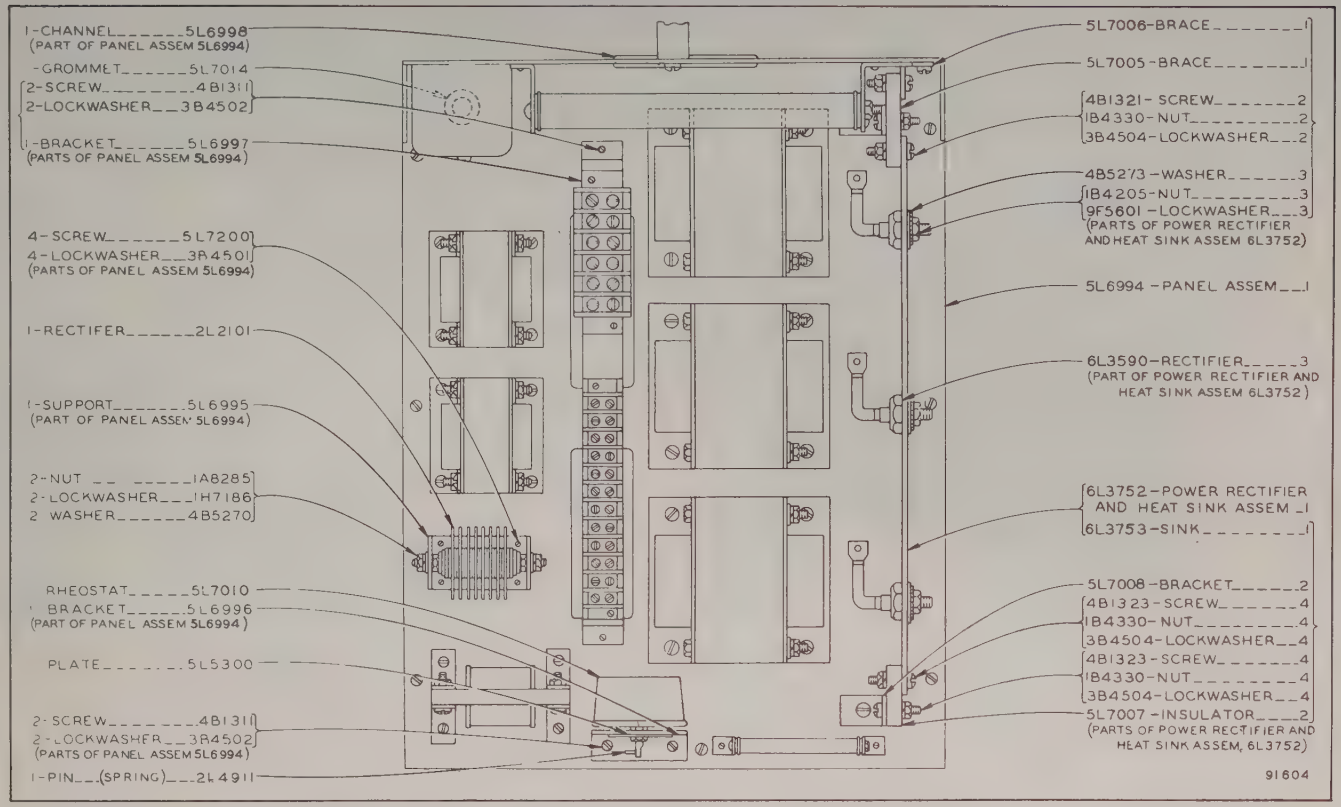

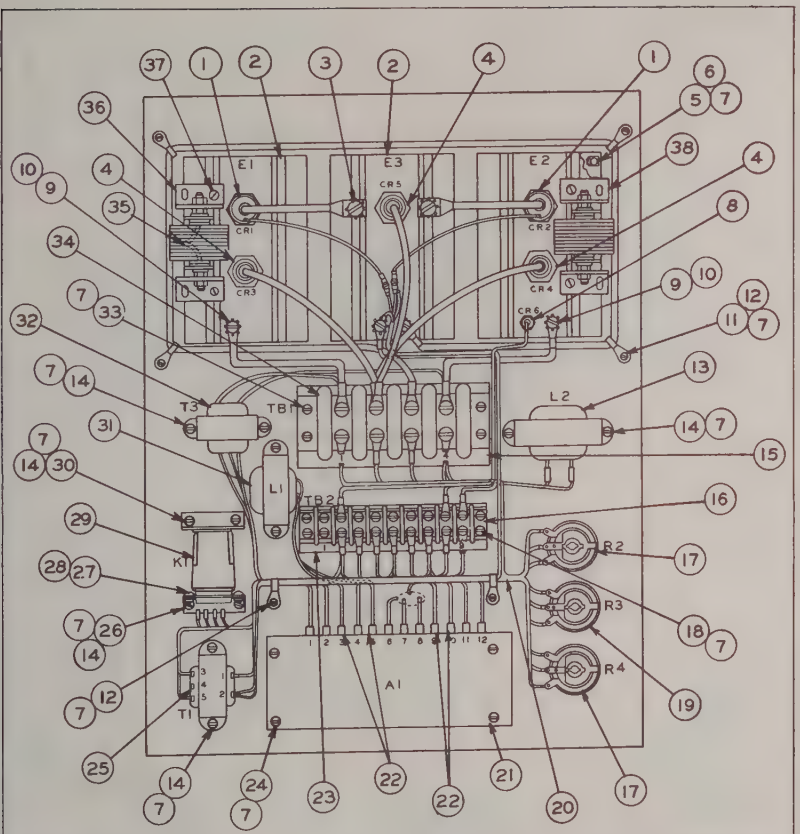

REF NO	PART NUMBER	DESCRIPTION	QTY
1	6L9670	RECTIFIER	2
2	8L5043	HEAT SINK	3
3	1S7443	SCREW	2
	6L7161	NUT	2
	7F9223	LOCKWASHER	2
4	6L3590	RECTIFIER	3
5	6L7077	SCREW	12
6	7L336	NUT	12
7	9B7233	LOCKWASHER	42
8	7L8032	RECTIFIER	1
9	4B1237	SCREW	4
10	8F1434	LOCKWASHER	4
11	6L7008	CLAMP	4
12	4B1221	SCREW	6
13	6L6622	REACTOR	1
14	4B1220	SCREW	12
15	8L5042	STRIP	1
16	2F2832	TERMINAL BLOCK	1
17	6L7003	POTENTIOMETER	2
18	3H3627	SCREW	4
19	6L7004	POTENTIOMETER	1

REF NO	PART NUMBER	DESCRIPTION	QTY
20	8L5083	HARNESS	1
21	8L5460	REGULATOR ASSEM.	1
22	8L5040	TERMINAL	4
23	7L330	STRIP	1
24	8M8626	SCREW	4
25	6L6623	TRANSFORMER	1
26	8L5055	BRACKET	1
27	2F7306	SCREW	2
28	3L8187	LOCKWASHER	2
29	7L2767	RELAY	1
30	7L331	BRACKET	1
31	7L7812	CHOKE (Filter)	1
32	8L4269	TRANSFORMER	1
33	3K8106	SCREW	4
34	8L5041	TERMINAL STRIP	1
35	8L5456	LEAD ASSEM.	1
36	8L4873	VOLTAGE SUPPRESSOR--(Phase)	1
37	7S1201	SCREW	4
	4B2043	NUT	4
	9F5599	LOCKWASHER	4
38	8L4863	VOLTAGE SUPPRESSOR--(Field)	1

105201

8L8950 EXCITER AND REGULATOR ASSEMBLY
Part of 7L35 Generator shown on Page 191D-2

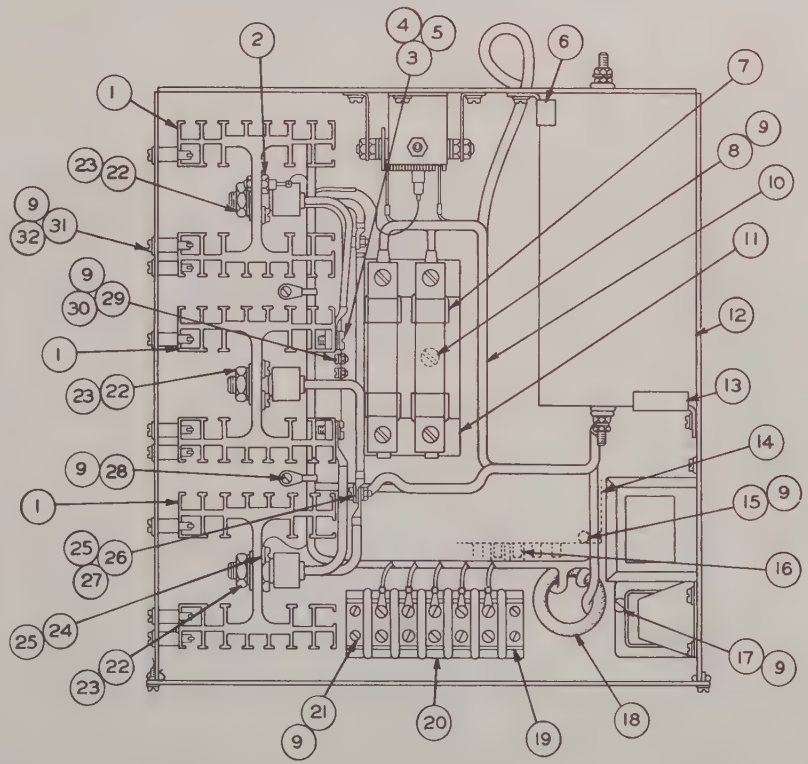

REF NO	PART NUMBER	DESCRIPTION	QTY
1	8L5043	HEAT SINK	3
2	7L8032	RECTIFIER	1
3	1S7443	SCREW	2
4	6L7161	NUT	2
5	7F9223	LOCKWASHER	2
6	8L5830	BRACKET	1
7	7L6745	FUSE	2
8	3D9799	SCREW	2
9	9B7233	LOCKWASHER	28
10	1N5569	HARNESS	1
11	7L7398	BLOCK	1
12	1N5567	NOISE SUPPRESSION ASSEM.	1
13	8L5829	BRACKET	1
14	8L5460	REGULATOR ASSEM.	1
15	8M8626	SCREW	4
16	8L5040	TERMINAL	2
17	4B1220	SCREW	2
18	8L5478	GROMMET	2
19	2L1717	STRIP-----(Barrier Terminal)-----	1
20	1N7253	STRIP-----(Terminal Marker)-----	1
21	5M6668	SCREW	4
22	6L3590	RECTIFIER--------(Power)--------	3
23	6L9660	RECTIFIER--------(Silicon)-------	2
24	4B1237	SCREW	4
25	8F1434	LOCKWASHER	5
26	1H4336	SCREW	1
27	8L5832	NUT	1
28	4B1221	SCREW	2
29	7S1201	SCREW	2
30	4B2043	NUT	2
31	8L5828	SCREW	12
32	8L5827	NUT	12

1N5500 EXCITER AND REGULATOR ASSEMBLY—Part 1
Part of 7L95 Generator shown on Page 191D-4

1N5500 EXCITER AND REGULATOR ASSEMBLY—Part 2

Part of 7L95 Generator shown on Page 191D-4

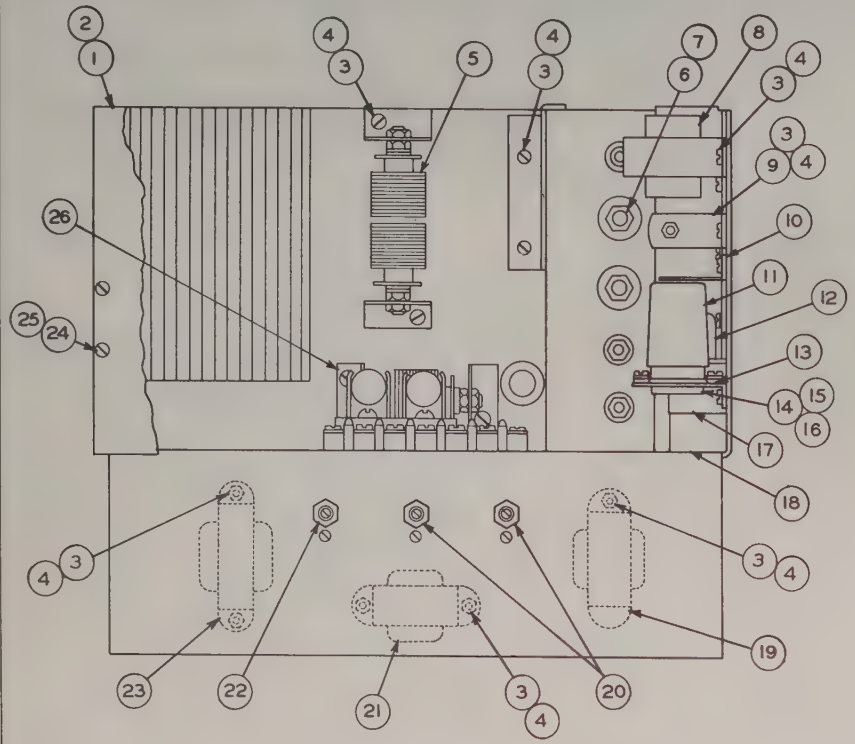

REF NO.	PART NUMBER	DESCRIPTION	QTY.
1	1N5036	GUARD ASSEM.	1
2	6L6421	LABEL (Part of 1N5036 Guard Assem.)	1
3	4B1220	SCREW	26
4	9B7233	LOCKWASHER	26
5	8L4873	VOLTAGE SUPPRESSOR	1
6	1D4717	NUT	4
7	3B4506	LOCKWASHER	4
8	6L6622	REACTOR	1
9	7L7397	RESISTOR ASSEM.	1
10	7L331	BRACKET	1
11	8L5823	RELAY	1
12	7L7392	BOOT	1
13	8L5824	BRACKET	1
14	8L5826	SOCKET ASSEM.	1
15	7L2770	RECTIFIER (Part of 8L5826 Socket Assem.)	1
16	7L2770	RECTIFIER	1
17	7L7402	STRAP	1
18	7L7400	CAPACITOR	1
19	6L6623	TRANSFORMER	1
20	6L7003	POTENTIOMETER—(Gain)	2
21	8L4269	TRANSFORMER	1
22	6L7004	POTENTIOMETER—(Droop)	1
23	7L7812	CHOKE—(Filter)	1
24	5S7348	SCREW	4
	8L5853	NUT—(Clip)	2
25	3L8187	LOCKWASHER	4
26	8L4863	VOLTAGE SUPPRESSOR	1

103977

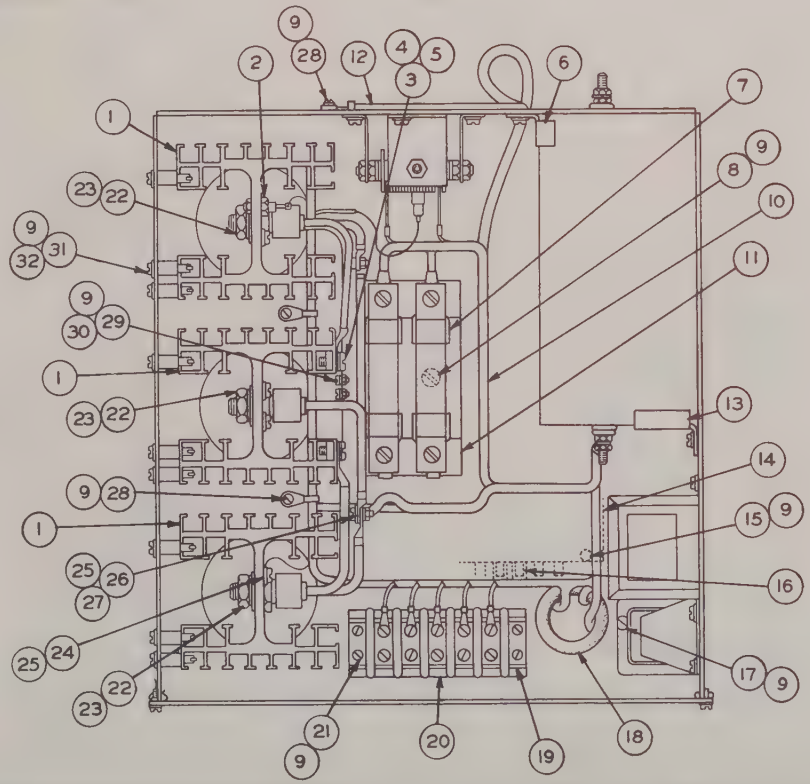

C INDICATES CHANGE FROM PREVIOUS TYPE

	REF. NO.	PART NUMBER	DESCRIPTION	QTY
	1	8L5043	HEAT SINK	3
	2	7L8032	RECTIFIER	1
	3	1S7443	SCREW	2
	4	6L7161	NUT	2
	5	7F9223	LOCKWASHER	2
	6	8L5830	BRACKET	1
	7	7L6745	FUSE	2
	8	3D9799	SCREW	2
C	9	9B7233	LOCKWASHER	30
	10	1N5569	HARNESS	1
	11	7L7398	BLOCK	1
C	12	6L7008	CABLE	2
	13	8L5829	BRACKET	1
	14	8L5460	REGULATOR ASSEM.	1
	15	8M8626	SCREW	4
	16	8L5040	TERMINAL	2
	17	4B1220	SCREW	2
C	18	8L5478	GROMMET	1
	19	2L1717	STRIP-----(Barrier Terminal)-----	1
	20	1N7253	STRIP-----(Terminal Marker)-----	1
	21	5M6668	SCREW	4
	22	6L3590	RECTIFIER--------(Power)--------	3
	23	6L9660	RECTIFIER--------(Silicon)-------	2
	24	4B1237	SCREW	4
	25	8F1434	LOCKWASHER	5
	26	1H4336	SCREW	1
	27	8L5832	NUT	1
C	28	4B1221	SCREW	4
	29	7S1201	SCREW	2
	30	4B2043	NUT	2
	31	8L5828	SCREW	12
	32	8L5827	NUT	12

127250

1N5500 EXCITER AND REGULATOR ASSEMBLY—Part 1—Type 2
Part of 7L95 Generator shown on Page 191D-4

1N5500 EXCITER AND REGULATOR ASSEMBLY—Part 2—Type 2

Part of 7L95 Generator shown on Page 191D-4

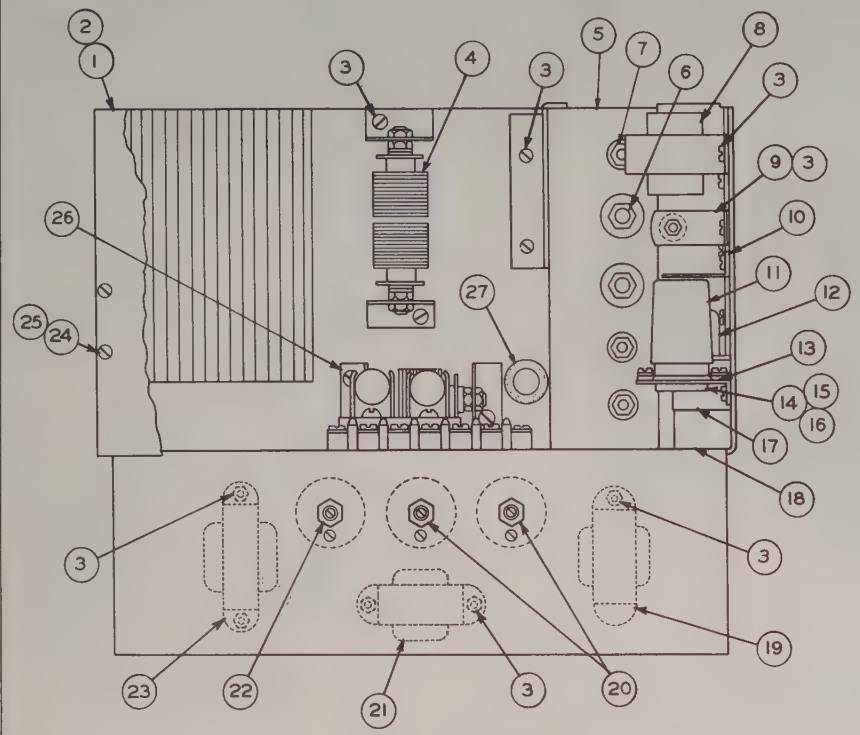

C INDICATES CHANGE FROM PREVIOUS TYPE

	REF. NO.	PART NUMBER	DESCRIPTION	QTY
	1	1N5036	GUARD ASSEM.	1
	2	6L6421	LABEL-------(Warning)-------- (Part of 1N5036 Assem.)	1
	3	4B1220	SCREW	26
		9B7233	LOCKWASHER	26
	4	8L4873	VOLTAGE SUPPRESSOR	1
	5	1N5567	NOISE SUPRESSION ASSEM.	1
C	6	1D4717	NUT	4
C		3B4506	LOCKWASHER	4
C	7	1B4330	NUT	6
C		3B4504	LOCKWASHER (Parts of 1N5567 Assem.)	6
	8	6L6622	REACTOR	1
C	9	1N9308	RESISTOR ASSEM.	1
	10	7L331	BRACKET	1
	11	8L5823	RELAY	1
	12	7L7392	BOOT	1
	13	8L5824	BRACKET	1
	14	8L5826	SOCKET ASSEM.	1
	15	7L2770	RECTIFIER (Part of 8L5826 Assem.)	1
	16	7L2770	RECTIFIER	1
	17	7L7402	STRAP	1
	18	7L7400	CAPACITOR	1
	19	6L6623	TRANSFORMER	1
	20	6L7003	POTENTIOMETER------(Gain)------	2
	21	8L4269	TRANSFORMER	1
	22	6L7004	POTENTIOMETER------(Droop)------	1
	23	7L7812	CHOKE--------(Filter)----------	1
	24	5S7348	SCREW	4
		8L5853	NUT----------(Clip)----------	2
	25	3L8187	LOCKWASHER	4
	26	8L4863	VOLTAGE SUPPRESSOR	1
C	27	1N9147	GROMMET	1

127251

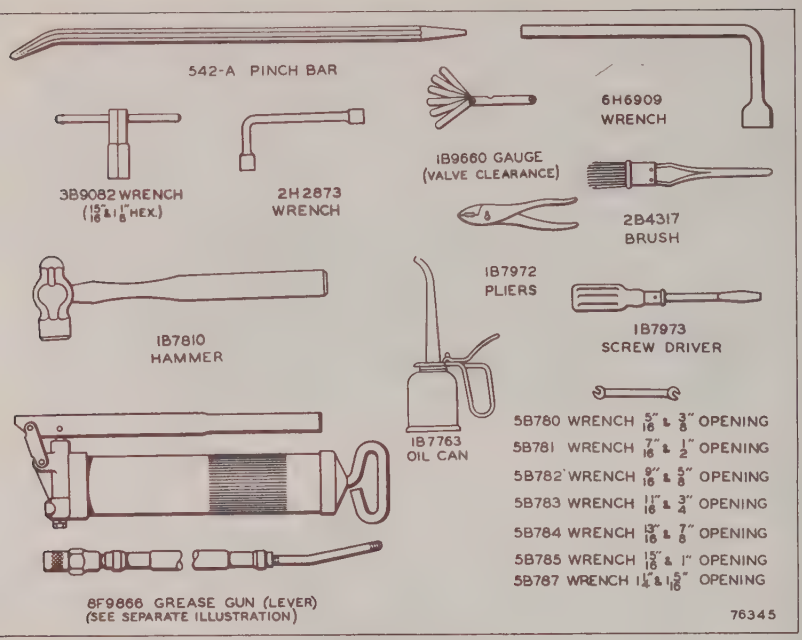

4L1560 TOOL GROUP
AN ATTACHMENT
Only separate parts serviced. When complete Group is required order 9S7977

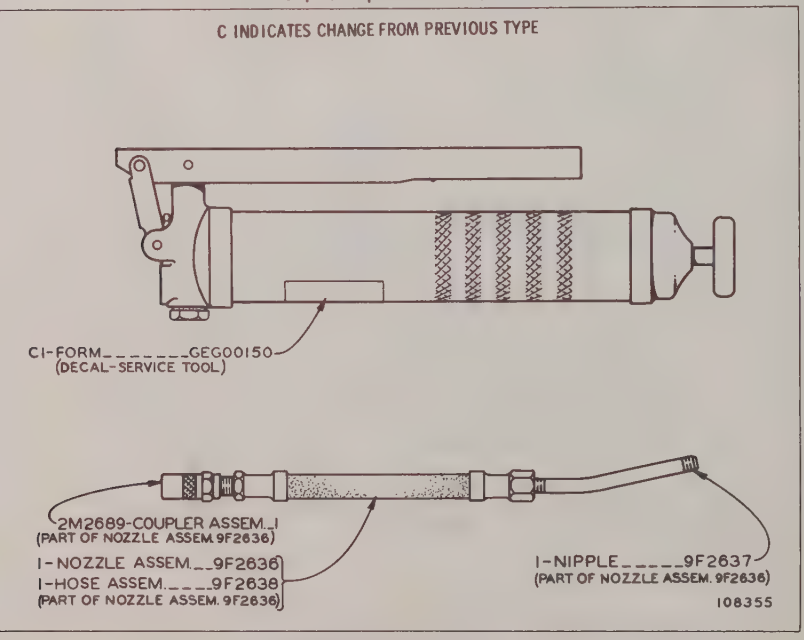

8F9866 GREASE GUN
Part of 4L1560 and 9S7977 Tool Groups

9S7977 TOOL GROUP
AN ATTACHMENT

9S1738 SCREWDRIVER
NO. 2 PHILLIPS

8S2265 STRAP WRENCH ASSEM.

5S9569 SOCKET

8H8503 WRENCH (5/16" Opening)
8H8505 WRENCH (3/8" Opening)
8H8513 WRENCH (7/8" Opening)
8H8508 WRENCH (9/16" Opening)
8H8509 WRENCH (5/8" Opening)
8H8511 WRENCH (3/4" Opening)
8H8515 WRENCH (1" Opening)

1F1157 SCREWDRIVER

5S9568 SOCKET

5S9566 WRENCH

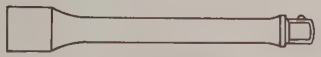

5S9567 EXTENSION

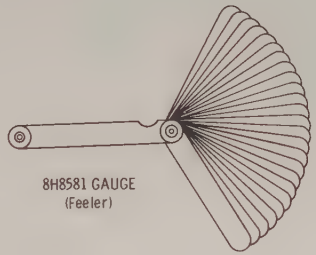

8H8581 GAUGE
(Feeler)

8H8549 SOCKET (9/16" Opening)
8H8554 SOCKET (7/8" Opening)
8H8555 SOCKET (15/16" Opening)
8H8556 SOCKET (1" Opening)
9S1730 SOCKET (11/8" Opening)

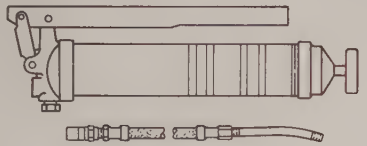

8F9866 GREASE GUN (Lever)
(See Separate Illustration)

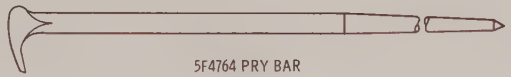

5F4764 PRY BAR

108502

QUANTITY USED	PART NUMBER	DESCRIPTION
1	5L3985	Plate--Warning and Information
1	2M6831	Plate--Serial Number
1	7M3855	Plate--Warning
2	7B3028	Drive Screw
1	1H3040	Transfer--Safety
2	1H4950	Transfer--Notice
2	6L4457	Transfer--CATERPILLAR
2	6L4447	Transfer--D379 Series A
2	6L6982	Transfer--D379 Series B
2	1M4898	Transfer--Filter Instructions
1	7M2214	Transfer--Air Cleaner Instructions
1	7M9575	Transfer--S.A.E. Opposite Standard Rotation
1	7M9576	Transfer--S.A.E. Standard Rotation
1	1S9547	Transfer--Crankcase

NAME PLATES AND TRANSFERS

1P2305 ELECTRIC TERMINAL KIT

(Insulated)

(Includes terminals, wire joints and crimping tool)

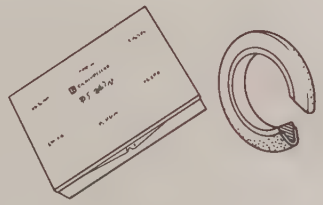

9S3138 SEAL KIT

(Includes 28 metal - backed seals)

9S3135 SEAL KIT

(Includes 60 rubber O-ring seals)

THREADED INSERTS KITS

Master (Includes inserts and tools)

Coarse	Fine	Size
9S3700	9S3500	Assorted

Repair (Includes inserts and tools)

9S3510	9S3509	#10
9S3512	9S3511	1/4
9S3514	9S3513	5/16
9S3618	9S3515	3/8
9S3620	9S3619	7/16
9S3622	9S3621	1/2
9S3624	9S3623	9/16
9S3626	9S3625	5/8
9S3628	9S3627	3/4
9S3630	9S3629	7/8
9S3632	9S3631	1
9S3633		1 1/8
9S3635		1 1/4
9S3637		1 1/2

Refill (Includes inserts)

9S3674	9S3673	#10
9S3649	9S3639	1/4
9S3650	9S3640	5/16
9S3651	9S3641	3/8
9S3652	9S3642	7/16
9S3653	9S3643	1/2
9S3654	9S3644	9/16
9S3655	9S3645	5/8
9S3656	9S3646	3/4
9S3657	9S3647	7/8
9S3658	9S3648	1 -
9S3675		1 1/8
9S3677		1 1/4
9S3679		1 1/2

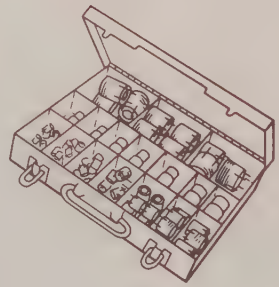

HARDWARE ASSORTMENT KITS

8S7198 Course Thread Hex Nut

8S7197 Fine Thread Hex Nut

8S7196 Lockwasher Assortment

8S7195 Flatwasher Assortment

8S7193 Woodruff Key Assortment

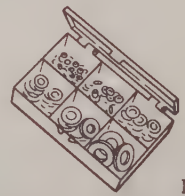

132096

RELATED REPAIR ITEMS

RELATED REPAIR ITEMS

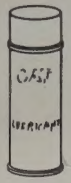

ANTI-SEIZURE COMPOUND

4S9416 16 oz. Aerosol
9M3710 16 oz. Paste

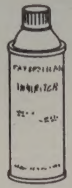

CORROSION INHIBITOR

7M73 16 oz.

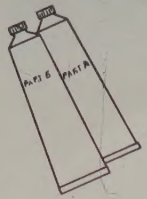

EPOXY CEMENT

5M2941 2 - 2 oz. tube

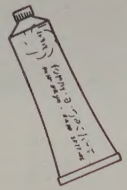

FORM-A-GASKET

4H5363 11 oz.
(fast drying-hard setting)
8H5137 11 oz.
(non-hardening)

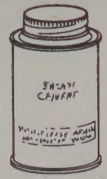

GASKET CEMENT

5H2471 8 oz.

GLASS OR PLASTIC CEMENT

3S1831 1 pint

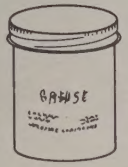

GREASE - SILICONE

4L7464 8 oz.

LIQUID GASKET

7M7260 8 oz.

RUST INHIBITOR

6F6041 1 Qt.
3S1492 1 Gal.

SEALING COMPOUND

5S1454 1 pint

SILICONE FLUID

8M553 145 cc.
9M5165 150 cc.

132097

SPECIFICATIONS

(SUBJECT TO CHANGE WITHOUT NOTICE)

Weight, shipping (approximate) ..... 9,000 lbs.

DIMENSIONS

Length ..... 82.9"
Width ..... 56.1"
Height ..... 74.3"

CAPACITIES

Lubrication: Engine: full pressure system, gear type pump.

Crankcase Capacity ..... 50 U.S. Gal.
Cooling System without radiator ..... 40 U.S. Gal.
Cooling System with radiator ..... 68 U.S. Gal.

STARTING METHOD

Electric, Air or Gasoline Engine Starting Systems are available.

ATTACHMENTS

Additional equipment such as Air Cleaner, Charging Generators, Radiators, Heat Exchangers, etc., are available at extra cost. Consult your "Caterpillar" Dealer.

MACHINE SERIAL NUMBER PLATE LOCATION

Serial number plate is located on the right-hand side of the cylinder block.

PRINTED IN U.S.A. FORM UE070021

CONVERSION EQUIVALENT TABLES

VOLUME AND CAPACITY EQUIVALENTS

Unit	Cu. In.	Cu. Ft.	Cu. Yd.	Cu. Cm.	Cu. M.	U.S. Liquid Gallons	Imperial Gallons	Liters
1 Cu. In.	1	.000579	.0000214	16.39	.0000164	.004329	.00359	.0164
1 Cu. Ft.	1728	1	.03704	28317	.0283	7.481	6.23	28.32
1 Cu. Yd.	46656	27	1	764600	.765	202	167.9	764.6
1 Cu. Cm.	.061	.00003531	.00000131	1	.000001	.000264	.00022	.001
1 Cu. M.	61020	35.31	1.308	1,000,000	1	264.2	220.2	1000
1 U.S. Liquid Gal.	231	.1337	.00495	3785	.003785	1	.833	3.785
1 Imperial Gallon	277.42	.16	.00594	4545.6	.004546	1.2	1	4.546
1 Liter	61.02	.03531	.001308	1000	.001	.2642	.22	1

LENGTH EQUIVALENTS

Unit	Centimeters	Inches	Feet	Yards	Meters	Kilometers
1 Centimeter	1	0.3937	0.03281	0.01094	0.01	
1 Inch	2.540	1	0.08333	0.02778	0.0254	
1 Foot	30.48	12	1	0.3333	0.3048	
1 Yard	91.44	36	3	1	0.9144	
1 Meter	100	39.37	3.281	1.0936	1	
1 Kilometer	100000	39370	3281	1093.6	1000	1

AREA EQUIVALENTS

Unit	Sq. Cm.	Sq. In.	Sq. M.	Sq. Ft.
1 Sq. Cm.	1	0.155		
1 Sq. In.	6.4516	1	.00064516	.006944
1 Sq. M.	10,000	1550	1	10.764
1 Sq. Ft.	929	144	0.0929	1

WEIGHT EQUIVALENTS

Unit	Kilograms	Ounces Avoirdupois	Pounds Avoirdupois
1 Kilogram	1	35.27	2.205
1 Ounce	0.02835	1	0.0625
1 Pound	0.4536	16	1

Inches to Centimeters and Centimeters to Inches

Inches or Centi-meters	Inches	Centi-meters	Inches or Centi-meters	Inches	Centi-meters
1	0.39	2.54	26	10.24	66.04
2	0.79	5.08	27	10.63	68.58
3	1.18	7.62	28	11.02	71.12
4	1.57	10.16	29	11.42	73.66
5	1.97	12.70	30	11.81	76.20
6	2.36	15.24	31	12.20	78.74
7	2.76	17.78	32	12.60	81.28
8	3.15	20.32	33	12.99	83.82
9	3.54	22.86	34	13.39	86.36
10	3.94	25.40	35	13.78	88.90
11	4.33	27.94	36	14.17	91.44
12	4.72	30.48	37	14.57	93.98
13	5.12	33.02	38	14.96	96.52
14	5.51	35.56	39	15.35	99.06
15	5.91	38.10	40	15.75	101.60
16	6.30	40.64	41	16.14	104.14
17	6.69	43.18	42	16.54	106.68
18	7.09	45.72	43	16.93	109.22
19	7.48	48.26	44	17.32	111.76
20	7.87	50.80	45	17.72	114.30
21	8.27	53.34	46	18.11	116.84
22	8.66	55.88	47	18.50	119.38
23	9.06	58.42	48	18.90	121.92
24	9.45	60.96	49	19.29	124.46
25	9.84	63.50	50	19.69	127.00

How to use:
11 inches = 27.94 centimeters
11 centimeters = 4.33 inches

CATERPILLAR

Caterpillar, Cat and CB are Trademarks of Caterpillar Tractor Co.

www.manualsplus.com

1016721

PRINTED IN U.S.A.

FORM UE070021